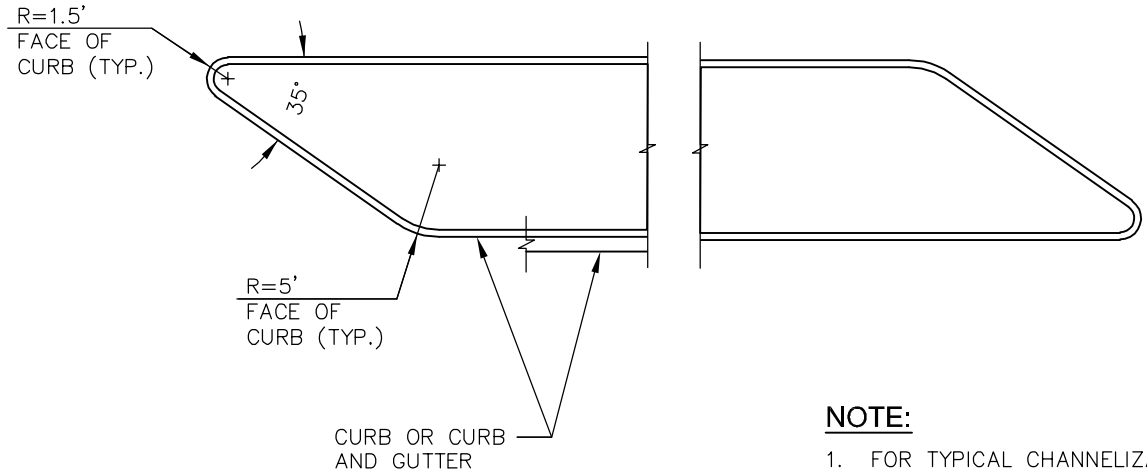

NOTE:

1. FOR TYPICAL CHANNELIZATION AT MEDIAN ISLAND, SEE STD. DWG. NO. CH-220-1.

City of Bellevue

MEDIAN NOSE LAYOUT

DRAWING NUMBER	RC-121-1
SCALE	NONE
REVISION DATE	2/22
DEPARTMENT	TRANS