DEVELOPMENT SERVICES DEPARTMENT
ENVIRONMENTAL COORDINATOR
450 110th Ave NE
BELLEVUE, WA 98009-9012

DETERMINATION OF NON-SIGNIFICANCE

PROPONENT: James Stull

LOCATION OF PROPOSAL: 10042 NE 33rd St

DESCRIPTION OF PROPOSAL: Threshold determination for backyard patio and deck improvements which encroach into wetland, stream and steep slope buffers and the stream structure setback.

FILE NUMBERS: 19-119545-LO **PLANNER:** Peter Rosen

The Environmental Coordinator of the City of Bellevue has determined that this proposal does not have a probable significant adverse impact upon the environment. An Environmental Impact Statement (EIS) is not required under RCW 43.21C.030(2)(C). This decision was made after the Bellevue Environmental Coordinator reviewed the completed environmental checklist and information filed with the Land Use Division of the Development Services Department. This information is available to the public on request.

☐ There is no comment period for this DNS. There is a 14-day appeal period. Only persons who submitted written comments before the DNS was issued may appeal the decision. A written appeal must be filed in the City Clerk's office by 5:00 p.m. on _____.

☒ This DNS is issued after using the optional DNS process in WAC 197-11-355. There is no further comment period on the DNS. There is a 14-day appeal period. Only persons who submitted written comments before the DNS was issued may appeal the decision. A written appeal must be filed in the City Clerk's Office by 5 p.m. on **9/3/2020**

☐ This DNS is issued under WAC 197-11-340(2) and is subject to a 14-day comment period from the date below. Comments must be submitted by 5 p.m. on _____. This DNS is also subject to appeal. A written appeal must be filed in the City Clerk's Office by 5:00 p.m. on _____.

This DNS may be withdrawn at any time if the proposal is modified so as to have significant adverse environmental impacts; if there is significant new information indicating a proposals probable significant adverse environmental impacts (unless a non-exempt license has been issued if the proposal is a private project): or if the DNS was procured by misrepresentation or lack of material disclosure.

Heidi Bedwell, Planning Manager
_____ **8/20/2020**
Environmental Coordinator Date

OTHERS TO RECEIVE THIS DOCUMENT:
☒ State Department of Fish and Wildlife / Stewart.Reinbold@dfw.gov; Christa.Heller@dfw.wa.gov;
☒ Army Corps of Engineers Susan.M.Powell@nws02.usace.army.mil
☒ Attorney General ecyolyef@atg.wa.gov
☒ Muckleshoot Indian Tribe Karen.Walter@muckleshoot.nsn.us; Fisheries.fileroom@muckleshoot.nsn.us

City of Bellevue
Development Services Department
Land Use Staff Report

Proposal Name:	**Stull Residence**
Proposal Address:	10042 NE 33rd St
Proposal Description:	The applicant requests approval of a Critical Areas Land Use Permit to retroactively permit backyard patio and deck improvements which encroach into wetland, stream and steep slope buffers and the stream structure setback.
File Number:	19-119545-LO
Applicant:	James Stull
Decisions Included:	Critical Areas Land Use Permit (Process II. LUC 20.30P)
Planner:	Peter Rosen, Senior Environmental Planner
State Environmental Policy Act Threshold Determination:	**Determination of Non-Significance** *Heidi Bedwell, Planning Manager* Elizabeth Stead, Environmental Coordinator Development Services Department
Director's Decision:	**Approval with Conditions** Michael A. Brennan, Director Development Services Department *Heidi Bedwell, Planning Manager* Elizabeth Stead, Land Use Director Development Services Department

Application Date:	July 23, 2019
Notice of Application Publication Date:	August 15, 2019
Decision Publication Date:	August 20, 2020
Project Appeal Deadline:	September 3, 2020

For information on how to appeal a proposal, visit Development Services Center at City Hall or call (425) 452-6800. Appeal of the Decision must be received in the City's Clerk's Office by 5 PM on the date noted for appeal of the decision.

CONTENTS

I. Proposal Description 1

II. Site Description, Zoning, Land Use and Critical Areas 3

III. Consistency with Land Use Code Requirements: 6

IV. Public Notice and Comment 13

V. Summary of Technical Reviews 13

VI. State Environmental Policy Act (SEPA) 13

VII. Decision Criteria 14

VIII. Conclusion and Decision 16

IX. Conditions of Approval 17

Attachments

1. Site Plan – Attached
2. Mitigation Plan - Attached
3. Critical Areas Report – In File
4. Geotechnical Reports – In File

I. Proposal Description

The applicant is requesting approval of a Critical Areas Land Use Permit to retroactively permit backyard paver patio and deck improvements which encroach into wetland, stream and steep slope buffers and the stream structure setback. The critical area buffers on the site coincide and overlap and the entire backyard of the subject site is encumbered by critical areas and buffers.

The backyard improvements included a modification to an existing wooden deck, the installation of a paver patio, fire pit, and retaining wall. The existing residential structure was unaltered. The backyard improvements were located immediately adjacent to the existing residence, over a lawn and ornamental landscape area where natural buffer vegetation was already altered. No significant trees were removed for the backyard improvements.

Figure 1 – Site Plan

The critical area buffers entirely overlap in the backyard. The backyard improvements impacted a total of 1,860 SF of combined critical area buffers

The site is adjacent to an off-site stream, Stream 0256 (Type N, non-fish-bearing stream), an unnamed tributary to Yarrow Creek. Type N streams require a 25-foot buffer and a 25-foot structure setback from the edge of the stream buffer. The stream buffer is measured from the top- of-bank, from where the streambanks slope at a grade of less than 3:1, and on the subject site the stream top-of-bank coincides with the top of the steep slope critical area. The backyard improvements impacted 165 SF of the stream buffer and 1,590 SF of the stream structure setback area.

A Category III wetland has been identified adjacent to stream and only a small portion of the wetland (140 SF) is located on the subject site. The wetland buffer extends across the entire backyard to the footprint of the existing residence. The backyard improvements impacted 1,815 SF of wetland buffer area and 45 SF of the structure setback from the buffer.

A steep slope critical area also encumbers the north, east and west perimeters of the site. A 50-foot steep slope buffer is required from the identified top-of-slope. The backyard improvements avoided impacts to the steep slope area but impacted the 50-foot buffer from the top of the slope.

To mitigate for the critical area buffer impacts, the proposal includes 1,860 SF of stream/ wetland buffer enhancement, which would be located within the steep slope area along the north site boundary. A 140 SF area of the on-site wetland in the northwest corner of the property would also be enhanced. The mitigation also includes removal of English Ivy, an invasive noxious weed specie, which has climbed into existing trees. The mitigation includes ivy control rings to prevent the ivy from re-establishing in the trees.

Figure 2 – Mitigation Plan

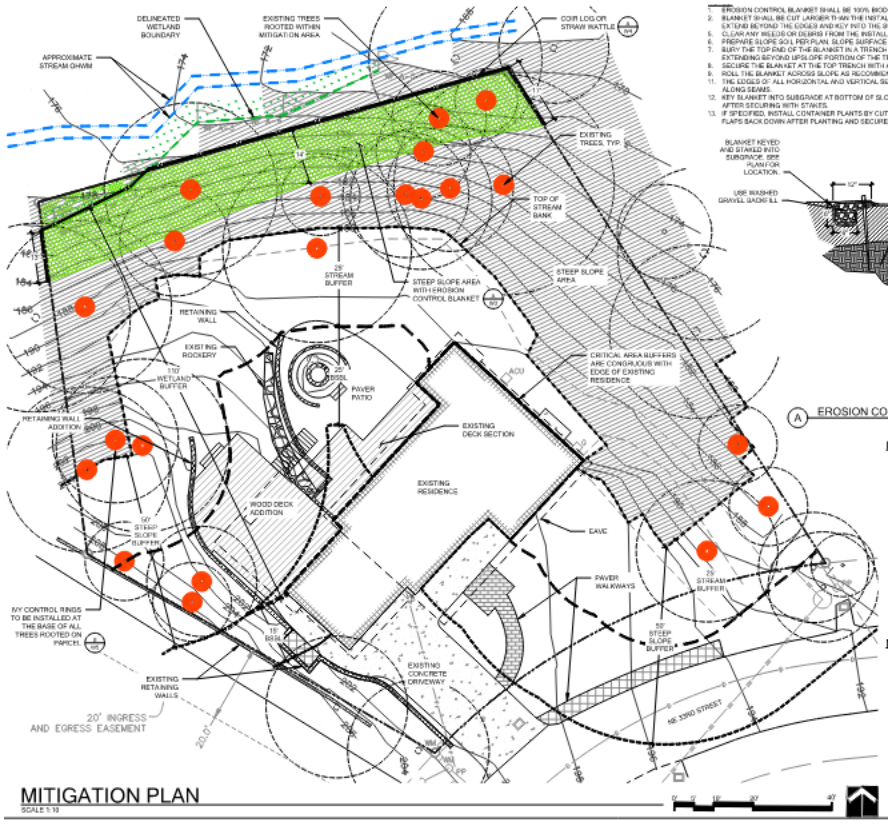

A Critical Areas Land Use Permit is required per LUC 20.25H.015.B because the proposal involves disturbance and modifications to critical area buffers. A Critical Area Report is required to modify the code standards that protect critical areas and limit improvements and development. The Critical Areas Report must demonstrate that the proposal would result in critical area functions and values that are at least as protective as with the application of the regulations and standards of the code, LUC 20.25H.230.

II. Site Description, Site Context, Zoning, Land Use and Critical Areas

A. Site Description

The project site is located at 10042 NE 33rd St in the North Bellevue subarea. The site is 20,852 SF in size and is currently improved with a single family residence. The residence is located in the middle of the site, approximately 70 feet from the off-site stream and wetland.

The site area surrounding the existing residence is primarily vegetated with lawn and ornamental landscaping. The steep slope areas on the site (which includes the inner portions of the stream and wetland buffers) are vegetated with a tree canopy of Big-leaf Maple, Red Alder, Douglas Fir, and Western Red Cedar. The understory vegetation consists of Salmonberry, Sword Fern, Cherry Laurel, Himalayan Blackberry and English Ivy. The on-site portion of the wetland includes Skunk Cabbage and Giant Horsetail. Many of the on-site trees are heavily infested with English Ivy, which has the potential to destabilize roots and cause trees to fall prematurely.

The Critical Areas Report (The Watershed Company, July 2019) found no species of local importance (listed in LUC 20.25H.150) were observed on the site, nor was habitat observed that is expected to have a primary association with any species of local importance given the local and landscape-level conditions. However, habitat features and indications of wildlife use on the site were noted; including standing snags, deer scat and bird nests.

B. Site Context

The immediate vicinity of the site is predominately developed with single-family residences. Directly north of the site is a multiple-owner, HOA tract, which contains Stream 0256 (Type N non-fish-bearing stream), an unnamed tributary to Yarrow Creek.

Figure 3 – Site Context

The Critical Areas Report characterizes the surrounding area as urban and dominated by single family residential development. Habitat areas within approximately ¼ mile of the site include the Yarrow Bay wetlands, adjacent to Yarrow Bay on Lake Washington, and Spring Hill Park to the southwest. However, these habitat patches in the vicinity are mostly disconnected from on-site habitat by roads and development.

C. Zoning

The property is zoned R-2.5, a single-family residential zoning district, and is located in the North Bellevue subarea. Surrounding zoning includes single family residential R-2.5 and R-3.5, with multi-family zoning (R-20) to the east of Bellevue Way NE. See Zoning Map, Figure 4.

Figure 4 – Zoning Map

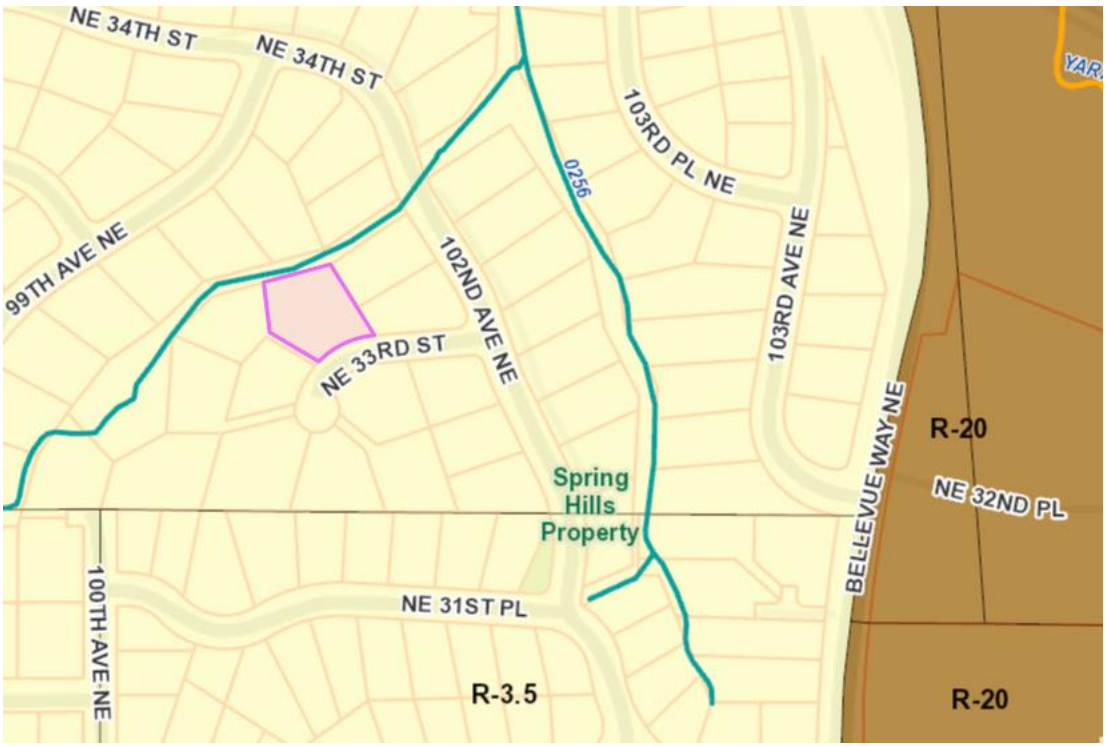

D. Land Use Context

The Comprehensive Plan designation for this site and the surrounding area is Single-Family Medium Density (SF-M). The proposal is consistent with single family residential improvements in this Land Use designation.

E. Critical Areas Functions and Values

i. Streams and Riparian Areas – LUC 20.25H.075

Stream and Riparian Area Functions: Most of the elements necessary for a healthy aquatic environment rely on processes sustained by dynamic interaction between the stream and the adjacent riparian area (Naiman et al., 1992). Riparian vegetation in floodplains and along stream banks provides a buffer to help mitigate the impacts of urbanization (Finkenbine et al., 2000 in Bolton and Shellberg, 2001). Riparian areas support healthy stream conditions.

Riparian vegetation, particularly forested riparian areas, affect water temperature by providing shade to reduce solar exposure and regulate high ambient air temperatures, slowing or preventing increases in water temperature (Brazier and Brown, 1973; Corbett and Lynch, 1985).

Upland and wetland riparian areas retain sediments, nutrients, pesticides, pathogens, and other pollutants that may be present in runoff, protecting water quality in streams (Ecology, 2001; City of Portland 2001). The roots of riparian plants also hold soil and prevent erosion and sedimentation that may affect spawning success or other behaviors, such as feeding.

Both upland and wetland riparian areas reduce the effects of flood flows. Riparian areas and wetlands reduce and desynchronize peak crests and flow rates of floods (Novitzki, 1979; Verry and Boelter, 1979 in Mitsch and Gosselink, 1993). Upland and wetland areas can infiltrate floodflows, which in turn, are released to the stream as baseflow

Stream riparian areas, or buffers, can be a significant factor in determining the quality of wildlife habitat. For example, buffers comprised of native vegetation with multi-canopy structure, snags, and down logs provide habitat for the greatest range of wildlife species (McMillan, 2000). Vegetated riparian areas also provide a source of large woody debris that helps create and maintain diverse in-stream habitat, as well as create woody debris jams that store sediments and moderate flood velocities.

Sparsely vegetated or vegetated buffers with non-native species may not perform the needed functions of stream buffers. In cases where the buffer is not well vegetated, it is necessary to either increase the buffer width or require that the standard buffer width be restored or re-vegetated (May 2003). Until the newly planted buffer is established the near term goals for buffer functions may not be attained.

Riparian areas often have shallow groundwater tables, as well as areas where groundwater and surface waters interact. Groundwater flows out of riparian wetlands, seeps, and springs to support stream baseflows. Surface water that flows into riparian areas during floods or as direct precipitation infiltrates into groundwater in riparian areas and is stored for later discharge to the stream (Ecology, 2001; City of Portland, 2001).

ii. Wetlands - LUC 20.25H.095

Wetland Functions - Wetlands provide important functions and values for both the human and biological environment—these functions include flood control, water

quality improvement, and nutrient production. These "functions and values" to both the environment and the citizens of Bellevue depend on their size and location within a basin, as well as their diversity and quality. While Bellevue's wetlands provide various beneficial functions, not all wetlands perform all functions, nor do they perform all functions equally well (Novitski et al., 1995). However, the combined effect of functional processes of wetlands within basins provides benefits to both natural and human environments. For example, urban wetlands may provide significant stormwater control and water quality functions, even if the wetlands are degraded and comprise only a small percentage of area within a basin.

iii. Geologic Hazard Areas - LUC 20.25H.120

Geologic Hazard Area Functions - LUC 20.25H.120.A.2 defines steep slope areas as those areas that contain slopes of greater than 40%, have a rise of at least 10 feet, and exceed 1,000 SF in area. The applicant has worked with a licensed surveyor and submitted a topographical site survey and site map identifying portions of the property which meet the steep slope criteria and are therefore regulated as a critical area. Regulated steep slopes are protected by a 50-foot top-of-slope buffer and a 75-foot toe-of-slope structure setback (LUC 20.25H.120.B.1 and C.2). The applicant has provided a geotechnical report prepared by a licensed geotechnical engineer.

Geologic hazards pose a threat to the health and safety of citizens when commercial, residential, or industrial development is inappropriately sited in areas of significant hazard. Some geologic hazards can be reduced or mitigated by engineering, design, or modified construction practices. When technology cannot reduce risks to acceptable levels, building in geologically hazardous areas is best avoided (WAC 365-190).

Steep slopes may serve several other functions and possess other values for the City and its residents. Several of Bellevue's remaining large blocks of forest are located in steep slope areas, providing habitat for a variety of wildlife species and important linkages between habitat areas in the City. These steep slope areas also act as conduits for groundwater, which drains from hillsides to provides a water source for the City's wetlands and stream systems. Vegetated steep slopes also provide a visual amenity in the City, providing a "green" backdrop for urbanized areas enhancing property values and buffering urban development.

III. Consistency with Land Use Code Requirements:

A. Zoning District Dimensional Requirements:

The site is located in the R-2.5 zoning district. The existing residence exceeds the 35% lot coverage standard, because the steep slope area is subtracted from the total site area in order to calculate for lot coverage. However, the backyard improvements didn't include an expansion or alteration to the existing single family residence, so the proposal did not

increase the existing non-conforming condition. The site, including the backyard improvements, has approximately 26% impervious surface coverage, which meets the 45% maximum impervious surface area standard. Compliance with zoning code dimensional standards will be verified with the required construction permit.

B. Critical Areas Requirements LUC 20.25H:

The City of Bellevue Land Use Code Critical Areas Overlay District (LUC 20.25H) establishes performance standards and procedures that apply to development on any site which contains in whole or in part any portion designated as critical area, critical area buffer or structure setback from a critical area or buffer. The site includes a steep slope critical area and steep slope buffer, stream buffer and stream structure setback, and wetland buffer and structure setback, as depicted on the Site Plan, Figure 1. The following sections address the applicable critical area performance standards that apply to the proposal.

i. Consistency with LUC 20.25H.080.A – Performance Standards – Streams and LUC 20.25H.100 – Performance Standards – Wetlands

The Performance Standards for Streams and Wetlands are the same and therefore are addressed together below:

1. Lights shall be directed away from the stream/wetland.

Response: The proposed site improvements are located adjacent to the existing residence, in the rear yard area. These improvements are located as far from the stream and wetland as is feasible given the location of the existing residential structure. Any additional light associated with the proposed site improvements would be minor and diffuse, primarily emanating from the proposed fire pit. A substantial grade break and tree vegetation exists between the site improvements and the stream and wetland area. Therefore, lights are not expected to reach or impact the stream or wetland.

2. Activity that generates noise such as parking lots, generators, and residential uses, shall be located away from the stream/wetland, or any noise shall be minimized through use of design and insulation techniques.

Response: The proposal does not include parking or generators and the backyard improvements are not expected to generate noise above the pre-existing levels associated with the residential use of the site. The site improvements are located adjacent to the existing residence, as far away from the wetland and stream as is feasible.

3. Toxic runoff from new impervious area shall be routed away from the stream/wetland.

Response: No toxic runoff is anticipated from the new paver patio impervious surface area. The addition of native plantings in the stream and wetland buffer will help to filter any pollutants before reaching the stream and wetland.

4. **Treated water may be allowed to enter the stream/wetland critical area buffer.**

   Response: Not applicable. The proposal will not generate treated water.

5. **The outer edge of the stream/wetland critical area buffer shall be planted with dense vegetation to limit pet or human use. Preference shall be given to native species.**

   Response: The outer edge of the standard stream and wetland buffers are within the improved backyard area of the existing residence and the outer buffer area has been altered and maintained for residential use. The steep slope critical area is forested and separates the active backyard from the stream and wetland. The steep slopes and the existing vegetation in the steep slope area will limit pet or human use from the stream and wetland buffer.

   The proposed buffer mitigation planting is located along the north property boundary, adjacent to the stream and wetland; located in order to improve the vegetation and habitat functions adjacent to the most significant ecological areas on the site. **See Conditions of Approval regarding Clearing & Grading Permit, Final Mitigation Plan, Final Mitigation Plan Performance Standards, and Maintenance and Monitoring Reports, in Section IX of this report.**

6. **Use of pesticides, insecticides and fertilizers within 150 feet of the edge of the stream/wetland critical area buffer shall be in accordance with the City of Bellevue's "Environmental Best Management Practices", now or as hereafter amended.**

   Response: No use of pesticides, insecticides and fertilizers is expected within 150 feet of the edge of the stream/wetland critical area buffer. Any applications would be conducted in accordance with the City of Bellevue's "Environmental Best Management Practices." The backyard improvements would decrease the lawn area and corresponding potential for fertilizer/herbicide use.

ii. Consistency with LUC 20.25H.125 - Performance standards - Landslide hazards and steep slopes.

In addition to generally applicable performance standards set forth in LUC 20.25H.055 and 20.25H.065, development within a landslide hazard or steep slope critical area or the critical area buffers of such hazards shall incorporate the following additional performance standards in design of the development, as applicable. The requirement for long-term slope stability shall exclude designs that require regular and periodic maintenance to maintain their level of function.

A. Structures and improvements shall minimize alterations to the natural contour of the slope, and foundations shall be tiered where possible to conform to existing topography;

Finding: The backyard improvements are located in the moderately-sloped yard

adjacent to the existing residence, no alterations were made to the steep slope critical area. Grading for the backyard deck and paver patio was minimal, and according to the project's geotechnical engineer the post-construction grades conform closely to the pre-construction topography.

B. Structures and improvements shall be located to preserve the most critical portion of the site and its natural landforms and vegetation;

Finding: The backyard improvements are located adjacent to the existing residence over a moderately-sloped lawn and ornamental landscape area. The improvements preserve the most critical portion of the site; avoiding impacts to the steep slope critical area and native vegetation areas within the stream and wetland buffers

C. The proposed development shall not result in greater risk or a need for increased buffers on neighboring properties;

Finding: According to the Geologic Hazard Evaluation (Associated Earth Sciences, July 19, 2019), the backyard improvements are setback a minimum distance of 20 feet from the top of the steep slope and this setback provides suitable mitigation of steep slope and landslide hazards, meets City performance standards for slope stability, and would not result in an increased risk or need for increased buffers on neighboring properties.

The Land Use Code requires applicants to record a hold harmless agreement for any approvals to modify steep slopes and buffers. A hold harmless agreement is required to be recorded and submitted with a Clearing & Grading Permit application. **See Conditions of Approval regarding a Hold Harmless Agreement in Section IX of this report.**

D. The use of retaining walls that allow the maintenance of existing natural slope area is preferred over graded artificial slopes where graded slopes would result in increased disturbance as compared to use of retaining wall;

Finding: Two low segmental block retaining walls were constructed with the backyard improvements. The walls are less than 4 feet in height and are located adjacent to the existing residence. The walls minimized disturbance and the grading of natural slope areas.

E. Development shall be designed to minimize impervious surfaces within the critical area and critical area buffer;

Finding: No addition of impervious surfaces occurred within the steep slope critical area. The backyard improvements are located adjacent to the existing residence over a lawn and ornamental landscape area; the proposal avoided and minimized new impervious surfaces within natural, vegetated critical areas and buffers.

F. Where change in grade outside the building footprint is necessary, the site retention system should be stepped and regrading should be designed to minimize topographic modification. On slopes in excess of 40 percent, grading for yard area may be disallowed where inconsistent with this criteria;

Finding: Grading for the backyard improvements was minimal and located on moderately-sloped portions of the property, minimizing topographic modifications and avoiding the grading of steep slopes in excess of 40%.

G. Building foundation walls shall be utilized as retaining walls rather than rockeries or retaining structures built separately and away from the building wherever feasible. Freestanding retaining devices are only permitted when they cannot be designed as structural elements of the building foundation;

Finding: Not applicable. The proposal does not include construction of a building or building foundation walls.

H. On slopes in excess of 40 percent, use of pole-type construction which conforms to the existing topography is required where feasible. If pole-type construction is not technically feasible, the structure must be tiered to conform to the existing topography and to minimize topographic modification;

Finding: Not applicable. The proposal does not include construction of a building. The deck expansion is located in a moderately-sloped yard area and does not necessitate tiering to minimize the topographic modification.

I. On slopes in excess of 40 percent, piled deck support structures are required where technically feasible for parking or garages over fill-based construction types; and

Finding: Not applicable. The backyard improvements were not located on slopes in excess of 40% and did not include structures for parking or garages.

J. Areas of new permanent disturbance and all areas of temporary disturbance shall be mitigated and/or restored pursuant to a mitigation and restoration plan meeting the requirements of LUC 20.25H.210.

Finding: The proposal includes a mitigation plan to mitigate for the areas of new permanent disturbance in critical area buffers. See Attachment 2. The mitigation plan meets the requirements of LUC 20.25H.210. The backyard improvements impacted 1,860 SF of critical area buffers (combined wetland, stream, steep slope buffer areas) and the proposed mitigation includes 1,860 SF of buffer enhancement. The backyard improvements were located over existing lawn and ornamental landscape area and no significant trees were removed. The mitigation planting is located in the north portion of the property, closest to the stream and wetland, providing the most ecological benefit to these critical areas. The proposed mitigation also includes 140 SF of planting enhancement of the on-site portion of the wetland. Landscaping has restored areas of temporary construction disturbance.

A final mitigation plan is required to be submitted and approved with a Clearing & Grading Permit in critical areas (GJ permit). The final mitigation plan shall be consistent with the mitigation plan approved under this permit. The final mitigation plan shall show planting locations, plant species, plant quantities and size of plant material. The mitigation planting is required to be maintained and monitored for five years. The final mitigation plan shall include performance standards to measure the successful establishment of the mitigation plantings. **See Conditions of Approval regarding Clearing & Grading Permit, Final Mitigation Plan, Final Mitigation Plan Performance Standards, and Maintenance and Monitoring Reports, in Section IX of this report.**

iv. Consistency with LUC 20.25H.140 – Critical areas report – Additional provisions for landslide hazards and steep slopes.

A geotechnical engineering evaluation (Associated Earth Sciences, July 19, 2019) has been submitted with the application and includes an assessment of the geological characteristics of the site and project area, an analysis of the proposal and its relationship to the geologic hazards including potential threats to adjacent properties, and safety measures during construction. The report includes a slope stability analysis, prepared consistent with the City's requirements for geotechnical reports and slope stability analysis. The analysis indicates the calculated factors of safety for the slope exceed the minimum values specified by the City. The report concludes that the deck and patio improvements were setback a minimum distance of 20 feet from the steep slope area and that the construction did not result in an increased risk of landslides or geologic hazards on the subject site or adjacent properties.

The backyard improvements and modifications to the critical area buffers and structure setbacks are limited to the approved Site Plan in Attachment 1. There is no implied approval for future modifications or expansion of any sort within the prescribed critical area or critical area buffer/structure setback. Routine repair and maintenance shall be in accordance with the performance standards set forth in LUC 20.25H.055. **See Conditions of Approval regarding Critical Area Buffer Modification Limitations in Section IX of this report.**

v. Consistency with LUC 20.25H.145 – Critical areas report – Approval of modification

Modifications to geologic hazard critical areas and critical area buffers shall only be approved if the Director determines that the modification:

B. Will not increase the threat of the geological hazard to adjacent properties over conditions that would exist if the provisions of this part were not modified;

Finding: The backyard improvements did not involve work within the steep slope critical area, it was limited to the moderately-sloped backyard adjacent to the residence. The

geotechnical report concluded that the backyard improvements did not increase the threat of geologic hazards on adjacent properties.

C. Will not adversely impact other critical areas;

Finding: Stream 0256 and most of the wetland area are located off-site to north of the subject parcel. The forested steep slope area separates the backyard improvements from the stream and wetland, reducing the potential for adverse impacts to the stream and wetland.

D. Is designed so that the hazard to the project is eliminated or mitigated to a level equal to or less than would exist if the provisions of this part were not modified;

Finding: The geotechnical report concluded that the backyard improvements did not result in an increased risk or slope stability hazard than would exist if the steep slope buffer was not reduced or modified.

E. Is certified as safe as designed and under anticipated conditions by a qualified engineer or geologist, licensed in the state of Washington;

Finding: The geotechnical report (Associated Earth Sciences, July 19, 2019) was prepared by a licensed engineer or geologist. The report concluded that the backyard improvements are located 20 feet from the steep slope area and did not impact slope stability. The slope stability analysis concluded factors of safety for the slope exceed the minimum values specified by the City.

F. The applicant provides a geotechnical report prepared by a qualified professional demonstrating that modification of the critical area or critical area buffer will have no adverse impacts on stability of any adjacent slopes, and will not impact stability of any existing structures. Geotechnical reporting standards shall comply with requirements developed by the Director in City of Bellevue Submittal Requirements Sheet 25, Geotechnical Report and Stability Analysis Requirements, now or as hereafter amended;

Finding: The geotechnical report prepared by Associated Earth Sciences complies with this standard.

G. Any modification complies with recommendations of the geotechnical support with respect to best management practices, construction techniques or other recommendations; and

Finding: A geotechnical report was not prepared prior to the construction of the backyard improvements and no geotechnical monitoring was completed at the time of construction. However, the geotechnical engineer evaluated the backyard improvements post-construction and concluded it did not impact slope stability on the

site or on adjacent properties.

H. The proposed modification to the critical area or critical area buffer with any associated mitigation does not significantly impact habitat associated with species of local importance, or such habitat that could reasonably be expected to exist during the anticipated life of development proposal if the area were regulated under this part. (Ord. 5680, 6-26-06, § 3)

Finding: The Critical Areas Report (The Watershed Company, July 2019) found no species of local importance (listed in LUC 20.25H.150) were observed on the site, nor was habitat observed that is expected to have a primary association with any species of local importance given the local and landscape-level conditions. However, habitat features and indications of wildlife use on the site were noted; including standing snags, deer scat and bird nests.

The proposal includes buffer enhancement planting (1,860 SF) located in the north portion of the property, closest to the off-site stream and wetland, providing a net benefit to wildlife habitat functions and potential habitat for species of local importance.

IV. Public Notice and Comment

Application Date:	July 23, 2019
Public Notice (500 feet):	August 15, 2019
Minimum Comment Period:	August 29, 2019

The Notice of Application for this project was published in the City of Bellevue weekly permit bulletin on August 15, 2019. It was mailed to property owners within 500 feet of the project site. No comments were received.

V. Summary of Technical Reviews

A. Clearing and Grading:

The Clearing and Grading Division of the Development Services Department has reviewed and approved the backyard improvements and the geotechnical report for compliance with Clearing and Grading codes and standards.

VI. State Environmental Policy Act (SEPA)

The environmental review indicates no probability of significant adverse environmental impacts occurring as a result of the proposal. The Environmental Checklist submitted with the application disclosed expected environmental impacts associated with the project. The permit submittal demonstrates adequate mitigation for the project impacts and no additional mitigation measures are necessary to mitigate for environmental impacts associated with the construction. Therefore, issuance of a Determination of Non-Significance (DNS) is the appropriate threshold determination under the State Environmental Policy Act (SEPA) requirements.

VII. Decision Criteria

A. Consistency with LUC 20.25H.255 – Critical areas report – Decision criteria

General.

Except for the proposals described in subsection B of this section, the Director may approve, or approve with modifications, the proposed modification where the applicant demonstrates:

1. **The modifications and performance standards included in the proposal lead to levels of protection of critical area functions and values at least as protective as application of the regulations and standards of this code;**

   Finding: The Critical Areas Report includes a "Functional Lift Analysis" (Section 5.5, Critical Areas Report, The Watershed Company, July 2019) demonstrating that the project, with the incorporation of the planting mitigation, will improve the functions of on-site critical areas over existing site conditions and increase the critical area functions and values than with the application of the code standards. The qualitative analysis evaluates water quality, hydrology, slope stability, and wildlife habitat functions; comparing the existing conditions with proposed conditions and the net result.

2. **Adequate resources to ensure completion of any required mitigation and monitoring efforts;**

   Finding: The proposal includes a critical area buffer mitigation plan to address the project impacts. The mitigation planting is located in the steep slope area adjacent to the north property boundary and the off-site stream and wetland. The applicant shall submit a Clearing & Grading Permit in critical areas (GJ permit) for the required mitigation planting. The Clearing & Grading Permit in Critical Areas (GJ) shall be submitted within 6 months of the approval of this Critical Areas Permit. **See Conditions of Approval regarding Clearing & Grading Permit in Section IX of this report.**

   The mitigation planting is required to be monitored for five (5) years. A monitoring and maintenance surety is required prior to issuance of a Clearing & Grading Permit for an amount equal to 20% of the estimated cost of planting, maintenance and monitoring for five years**.** A cost estimate and maintenance/ monitoring surety is required to be submitted with the Clearing & Grading Permit. **See Conditions of Approval regarding Maintenance and Monitoring Surety in Section IX of this report.**

3. **The modifications and performance standards included in the proposal are not detrimental to the functions and values of critical area and critical area buffers off-site; and**

   Finding: The stream and most of the wetland area are located off-site to the north of the subject site. The proposed on-site mitigation will improve the

functions of the on-site critical area buffers. These mitigation activities will have a positive effect on the nearby off-site stream and wetland critical areas; by replacing invasive species with native trees, shrubs and groundcover, which will improve wildlife habitat and slope stability functions.

4. The resulting development is compatible with other uses and development in the same land use district.

Finding: The subject site is zoned for and surrounded by single family development. The backyard improvements are compatible and consistent with other residential uses and development in the same land use district.

B. Consistency with LUC 20.30P.140 – Critical Areas Land Use Permit – Decision criteria.

1. The proposal obtains all other permits required by the Land Use Code;

Finding: The applicant shall submit a Clearing & Grading Permit in Critical Areas for installation of the required mitigation planting. The Clearing & Grading Permit in Critical Areas (GJ) shall be submitted within 6 months of the approval of this Critical Areas Permit. **See Conditions of Approval regarding Clearing & Grading Permit in Section IX of this report.**

2. The proposal utilizes to the maximum extent possible the best available construction, design and development techniques which result in the least impact on the critical area and critical area buffer;

Finding: The backyard improvements were designed to result in the least impact to the critical areas and critical area buffers. The backyard improvements are located adjacent to the existing residence, at the maximum distance feasible from the critical areas and buffers. The improvements occurred over a lawn and ornamental landscape area, a degraded buffer area, and there were no impacts to significant trees or to native vegetation.

The geotechnical engineer concluded the location and design of the backyard improvements did not affect slope stability.

3. The proposal incorporates the performance standards of Part 20.25H to the maximum extent applicable, and ;

Finding: As discussed in Section III, the applicable performance standards of LUC 20.25H are being met.

4. The proposal will be served by adequate public facilities including street, fire protection, and utilities; and;

Finding: The proposal will be served by adequate public facilities. The backyard

improvements did not affect the utilities and public facilities serving the existing single family residence.

5. The proposal includes a mitigation or restoration plan consistent with the requirements of LUC Section 20.25H.210; and

Finding: The proposal includes a mitigation plan for the areas of new permanent disturbance, which meets the requirements of LUC 20.25H.210. See Attachment 2. The backyard improvements impacted 1,860 SF of critical area buffers (combined wetland, stream, steep slope buffer areas) and the proposed mitigation includes 1,860 SF of buffer enhancement. The proposed mitigation also includes 140 SF of planting enhancement of the on-site portion of the wetland.

A final mitigation plan is required to be submitted and approved with a Clearing and Grading permit. The final mitigation plan shall be consistent with the approved conceptual mitigation plan. The final mitigation plan shall show planting locations, plant species, plant quantities and size of plant material. The mitigation planting is required to be maintained and monitored for five years. The final mitigation plan shall include performance standards to measure the successful establishment of the mitigation plantings. **See Conditions of Approval regarding Clearing & Grading Permit, Final Mitigation Plan, Final Mitigation Plan Performance Standards, and Maintenance and Monitoring Reports, in Section IX of this report.**

6. The proposal complies with other applicable requirements of this code.

Finding: As discussed in this report, the proposal complies with all other applicable requirements of the Land Use Code.

VIII. Conclusion and Decision

After conducting the various administrative reviews associated with this proposal, including Land Use Code consistency, City Code and Standard compliance reviews, the Director of the Development Services Department does hereby **approve with conditions** the backyard improvements located within critical area buffers and structure setbacks as depicted on the approved Site Plan (Attachment 1).

Approval of this Critical Areas Land Use Permit does not constitute a permit for construction. A Clearing & Grading permit is required, and all plans are subject to review for compliance with applicable City of Bellevue codes and standards.

Note- Expiration of Approval: In accordance with LUC 20.30P.150 a Critical Areas Land Use Permit automatically expires and is void if the applicant fails to file for a necessary construction permits within one year of the effective date of the approval.

IX. Conditions of Approval

The applicant shall comply with all applicable Bellevue City Codes and Ordinances including but not limited to:

Applicable Ordinances	Contact Person
Clearing and Grading Code- BCC 23.76	Savina Uzunow, 425-452-7860
Land Use Code- BCC 20.25H	Peter Rosen, 425-452-5210

The following conditions are imposed under the Bellevue City Code referenced:

1. **Clearing & Grading Permit:** A Clearing & Grading Permit (GJ permit) is required for the mitigation planting. A Final Mitigation Plan shall be submitted with the Clearing & Grading Permit, consistent with the mitigation plan approved in this permit. A Clearing & Grading Permit (GJ permit) shall be submitted within 6 months of the date of approval of this Critical Areas Land Use Permit.

   Authority: Land Use Code 20.30P.140
   Reviewer: Peter Rosen, Development Services Department

2. **Critical Area Buffer Modification Limitations:** The modifications to the critical area buffers and structure setbacks approved in this report are limited to the approved Site Plan in Attachment 1. There is no implied approval for future modifications or expansion of any sort within the prescribed critical area or critical area buffer/structure setback. Routine repair and maintenance shall be in accordance with the performance standards set forth in LUC 20.25H.055.

   Authority: Land Use Code 20.25H.230
   Reviewer: Peter Rosen, Development Services Department

3. **Hold Harmless Agreement:** The property owner or his/her agent shall submit a Hold Harmless Agreement releasing the City of Bellevue from any and all liability associated with the proposed improvements. The Land Use Division will provide a template to be completed and recorded with King County Department of Assessments. A copy of the recorded Hold Harmless Agreement shall be submitted with the required Clearing & Grading Permit.

   Authority: Land Use Code 20.30P.170
   Reviewer: Peter Rosen, Development Services Department

4. **Final Mitigation Plan:** A Final Mitigation Plan is required to be submitted and approved with a Clearing & Grading Permit. The Final Mitigation Plan shall be consistent with the mitigation plan approved in this permit. The Final Mitigation Plan

shall show planting locations, plant species, plant quantities and size of plant material.

Authority: Land Use Code 20.25H.220
Reviewer: Peter Rosen, Development Services Department

5. **Final Mitigation Plan Performance Standards:** The Final Mitigation Plan shall include performance standards to measure the successful establishment of the mitigation plantings. The following performance standards are acceptable and shall be included on the final mitigation plans:

   Year 1 (from date of plant installation)
   - 100% survival of all installed plants and/or replanting in following dormant season to reestablish 100%
   - Maximum 10% coverage of invasive plants in planting area

   Year 2 (from date of plant installation)
   - At least 90% survival of all installed material
   - Maximum 10% coverage of invasive plants in planting area

   Year 3, 4, & 5 (from date of plant installation)
   - At least 85% survival of all installed material
   - Maximum 10% coverage of invasive plants in planting area

   Authority: Land Use Code 20.25H.220
   Reviewer: Peter Rosen, Development Services Department

6. **Maintenance and Monitoring Surety:** A financial surety is required to be submitted to ensure the mitigation planting successfully establishes. A monitoring/ maintenance assurance device that is equal to 20% of the cost of plants, installation, and the cost of monitoring is required to be held for a period of five years from the date of successful installation. A cost estimate is required to be provided with the Clearing & Grading permit and the financial surety is required to be posted prior to issuance of the Clearing & Grading permit. Release of the surety after the 5-year monitoring period is contingent upon a final inspection of the planting by Land Use Staff that finds the maintenance and monitoring plan was successful and the mitigation meets performance standards.

   Authority: Land Use Code 20.25H.220
   Reviewer: Peter Rosen, Development Services Department

7. **Maintenance and Monitoring Reports:** The mitigation planting is required to be maintained and monitored for five years to ensure the plants successfully establish. Annual monitoring reports are required to be submitted to document the plants are

meeting approved performance standards. Photos from selected photo points shall be included in the monitoring reports to document the planting. Land Use inspection is required by Land Use staff to end the plant monitoring period.

Reporting shall be submitted no later than December 31st of each monitoring year and shall include a site plan and photos from photo points established at the time of Land Use inspection. Reports shall be submitted to Peter Rosen or Heidi Bedwell by the above listed date and can be emailed to prosen@bellevuewa.gov or mailed directly to:

Environmental Planning Manager
Development Services Department
City of Bellevue
PO Box 90012
Bellevue, WA 98009-9012

Authority: Land Use Code 20.30P.140; 20.25H.220
Reviewer: Peter Rosen, Development Services Department

ATTACHMENT 1 - SITE PLAN

UNPERMITTED CONSTRUCTION IMPACTS ASSESSMENT

SCALE 1:10

LEGEND

- PARCEL BOUNDARY
- DELINEATED WETLAND BOUNDARY
- STANDARD WETLAND BUFFER (110 FT)
- STANDARD WETLAND BUFFER BSBL (15 FT)
- STREAM OHWM, APPROX. (NOT DELINEATED)
- STANDARD STREAM BUFFER (25 FT)
- STEEP SLOPE AREA
- TOP OF SLOPE / TOP OF BANK
- STANDARD TOP OF SLOPE BUFFER (50 FT) / STANDARD STREAM BUFFER BSBL, APPROX. (25 FT)
- STREAM BUFFER IMPACT (165 SF)
- WETLAND BUFFER IMPACT (1,815 SF)
- STREAM BUFFER BSBL IMPACT (1,590 SF)
- WETLAND BUFFER BSBL IMPACT (45 SF)

NOTES

1. STREAM BUFFER AND BSBL IMPACTS OVERLAP ENTIRELY WITH WETLAND BUFFER IMPACTS AND OCCUR ALMOST ENTIRELY WITHIN STEEP SLOPE BUFFER.
2. ALL STREAM AND WETLAND BUFFER IMPACTS OCCURRED OVER AREAS OF EXISTING LAWN.

THE WATERSHED COMPANY

750 Sixth Street South
Kirkland WA 98033

p 425.822.5242
www.watershedco.com
Science & Design

STULL RESIDENCE
MITIGATION PLAN
PREPARED FOR: JIM STULL
10042 NE 33RD STREET
PARCEL # 4122300062
BELLEVUE, WA 98004

SUBMITTALS & REVISIONS

NO.	DATE	DESCRIPTION	BY
1	07-24-2019	MITIGATION PLAN	RH
2	12-17-2019	REVISIONS PER CITY COMMENTS	RH

SHEET SIZE:
ORIGINAL PLAN IS 22" x 34".
SCALE ACCORDINGLY.

PROJECT MANAGER: KB
DESIGNED: RH
DRAFTED: RH
CHECKED: MF, KB
JOB NUMBER:
170714
SHEET NUMBER:
W2 OF 6

FILENAME
PRINTED BY
DATE

© Copyright- The Watershed Company

ATTACHMENT 2 - MITIGATION PLAN

NOTES:

1. EROSION CONTROL BLANKET SHALL BE 100% BIODEG
2. BLANKET SHALL BE CUT LARGER THAN THE INSTALLATION AREA SHOWN ON THE CONTRACT DRAWINGS IN ORDER TO EXTEND BEYOND THE EDGES AND KEY INTO THE SUBGRADE AS SHOWN.
5. CLEAR ANY WEEDS OR DEBRIS FROM THE INSTALLATION AREA BEFORE INSTALLING THE BLANKET.
6. PREPARE SLOPE SOIL PER PLAN. SLOPE SURFACE SHALL BE SMOOTH. INSTALL MULCH IF SPECIFIED.
7. BURY THE TOP END OF THE BLANKET IN A TRENCH 6 INCHES DEEP AND 6 INCHES WIDE WITH A MIN. 12" OF FABRIC EXTENDING BEYOND UPSLOPE PORTION OF THE TRENCH. BACKFILL AND COMPACT THE TRENCH AFTER SECURING.
8. SECURE THE BLANKET AT THE TOP TRENCH WITH A ROW OF STAKES.
9. ROLL THE BLANKET ACROSS SLOPE AS RECOMMENDED BY MANUFACTURER.
11. THE EDGES OF ALL HORIZONTAL AND VERTICAL SEAMS MUST BE SECURED WITH A MIN. 6" OF OVERLAP. PLACE STAKES ALONG SEAMS.
12. KEY BLANKET INTO SUBGRADE AT BOTTOM OF SLOPE IN A 12" X 6" ANCHOR TRENCH. BACKFILL AND COMPACT TRENCH AFTER SECURING WITH STAKES.
13. IF SPECIFIED, INSTALL CONTAINER PLANTS BY CUTTING AND "X" INTO FABRIC AND PULLING BACK FLAPS TO DIG HOLE. FOLD FLAPS BACK DOWN AFTER PLANTING AND SECURE IF NECESSARY.

MITIGATION PLAN

SCALE 1:10

0' 5' 10' 20' 40'

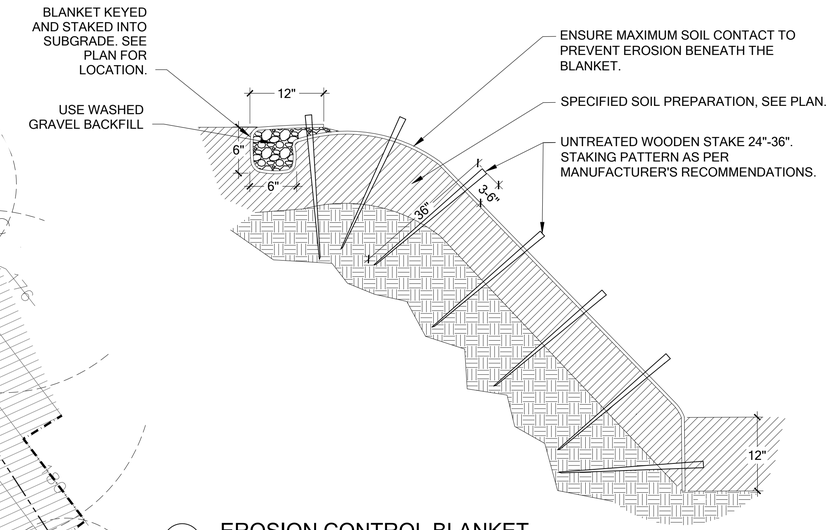

A EROSION CONTROL BLANKET

Scale: NTS

LEGEND

- PARCEL BOUNDARY
- DELINEATED WETLAND BOUNDARY
- STREAM OHWM, APPROX. (NOT DELINEATED)
- STANDARD STREAM BUFFER (25 FT)
- STEEP SLOPE AREA
- TOP OF SLOPE / TOP OF BANK
- COIR WATTLE (160 FT) A W6
- BUFFER MITIGATION AREA WITH EROSION CONTROL BLANKET (1,860 SF) A W3
- WETLAND MITIGATION AREA (140 SF)
- IVY CONTROL RING C W5

NOTES

1. COIR WATTLE IS SHOWN OFFSET FOR CLARITY PURPOSES; WATTLE SHALL BE PLACED ALONG DELINEATED BOUNDARY OF WETLAND OR PROPERTY LINE WHERE WETLAND BOUNDARY IS OFF-SITE.
2. SEE INVASIVE PLANT REMOVAL AND SITE PREPARATION DETAILS ON SHEET W5.

© Copyright- The Watershed Company

THE WATERSHED COMPANY
750 Sixth Street South
Kirkland WA 98033
p 425.822.5242
www.watershedco.com
Science & Design

STULL RESIDENCE
MITIGATION PLAN
PREPARED FOR: JIM STULL
10042 NE 33RD STREET
PARCEL # 4122300062
BELLEVUE, WA 98004

SUBMITTALS & REVISIONS

NO.	DATE	DESCRIPTION	BY
1	07-24-2019	MITIGATION PLAN	RH
2	12-17-2019	REVISIONS PER CITY COMMENTS	RH

SHEET SIZE:
ORIGINAL PLAN IS 22" x 34".
SCALE ACCORDINGLY.

PROJECT MANAGER: KB
DESIGNED: RH
DRAFTED: RH
CHECKED: MF, KB
JOB NUMBER: 170714

SHEET NUMBER: W3 OF 6

FILENAME
PRINTED BY
DATE

MITIGATION AREA PLANT SCHEDULE (2,000 SF)

BOTANICAL NAME / COMMON NAME	QTY.	SIZE	SPACING
TREES			
THUJA PLICATA / WESTERN RED CEDAR	6	1 GAL.	PER PLAN (9' O.C.)
TSUGA HETEROPHYLLA / WESTERN HEMLOCK	5	1 GAL.	PER PLAN (9' O.C.)
TOTAL TREE QUANTITY:	11		
SHRUBS			
CORNUS SERICEA / RED-OSIER DOGWOOD	140	LIVE STAKE	1' O.C.
ROSA NUTKANA / NOOTKA ROSE	4	1 GAL.	PER PLAN (5' O.C.)
RUBUS PARVIFLORUS / THIMBLEBERRY	6	1 GAL.	PER PLAN (5' O.C.)
RUBUS SPECTABILIS / SALMONBERRY	8	1 GAL.	PER PLAN (5' O.C.)
SAMBUCUS RACEMOSA / RED ELDERBERRY	4	1 GAL.	PER PLAN (5' O.C.)
SYMPHORICARPOS ALBUS / SNOWBERRY	6	1 GAL.	PER PLAN (5' O.C.)
TOTAL SHRUB QUANTITY:	168		
GROUNDCOVERS			
GAULTHERIA SHALLON / SALAL	100	1 GAL.	24" O.C.
MAHONIA NERVOSA / DULL OREGON GRAPE	100	1 GAL.	24" O.C.
POYLSTICHUM MUNITUM / WESTERN SWORDFERN	100	1 GAL.	24" O.C.
TOTAL GROUNDCOVER QUANTITY:	300		
TOTAL PLANT QUANTITY:	479		

*GROUNDCOVERS SHOULD BE GROUPED BY SPECIES IN GROUPS OF 5-7 PLANTS AND SPACED TRIANGULARLY.

NOTES:
1. INSTALL HARDWOOD CUTTINGS DURING THEIR DORMANCY. DO NOT ALLOW THEM TO DRY OUT.
2. CUTTINGS SHALL BE $\frac{3}{4}$" TO 1" IN DIAMETER OR APPROVED EQUIVALENT.
3. INSTALL TO MIN. 2/3RDS DEPTH INTO SOIL. USE TRIANGULAR SPACING. SEE PLANTING SCHEDULE FOR SPACING.
4. INSURE THAT BUDS ARE POINTING UP.
5. FIRM UP SOIL AROUND INSTALLED CUTTING.
6. WATER AFTER PLANTING AND BEFORE MULCHING.

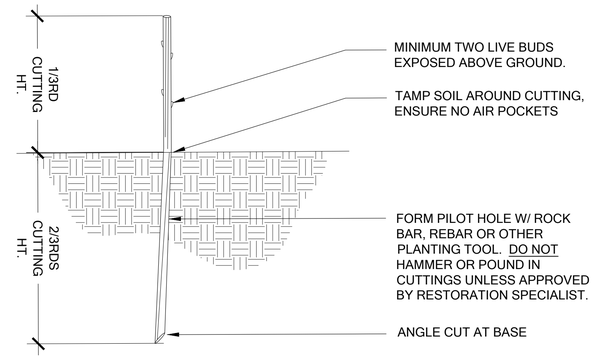

A LIVE STAKE PLANTING

Scale: NTS

NOTES:
1. PLANTING PIT SHALL NOT BE LESS THAN (2) TIMES THE WIDTH OF THE ROOT BALL DIA.
2. LOOSEN SIDES AND BOTTOM OF PLANT PIT
3. REMOVE FROM POT & ROUGH-UP ROOT BALL BEFORE INSTALLING. IF PLANT IS EXCEPTIONALLY ROOT-BOUND OR CONTAINS CIRCLING ROOTS, DO NOT PLANT AND RETURN TO NURSERY FOR AN ACCEPTABLE ALTERNATIVE. IF B&B STOCK, REMOVE ALL TWINE/WIRE, & REMOVE BURLAP FROM TOP 1/3RD OF ROOTBALL PRIOR TO PLANTING (NOTE: CONTAINER STOCK PREFERRED)
4. SOAK PLANTING PIT AFTER PLANTING

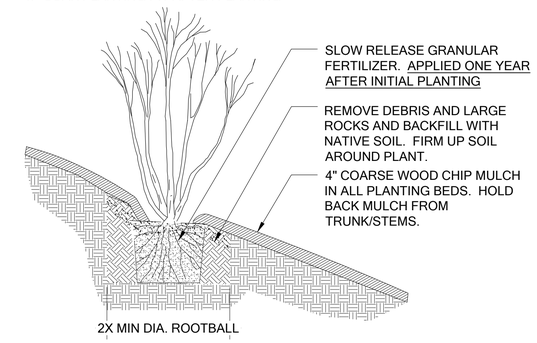

B CONTAINER PLANTING

Scale: NTS

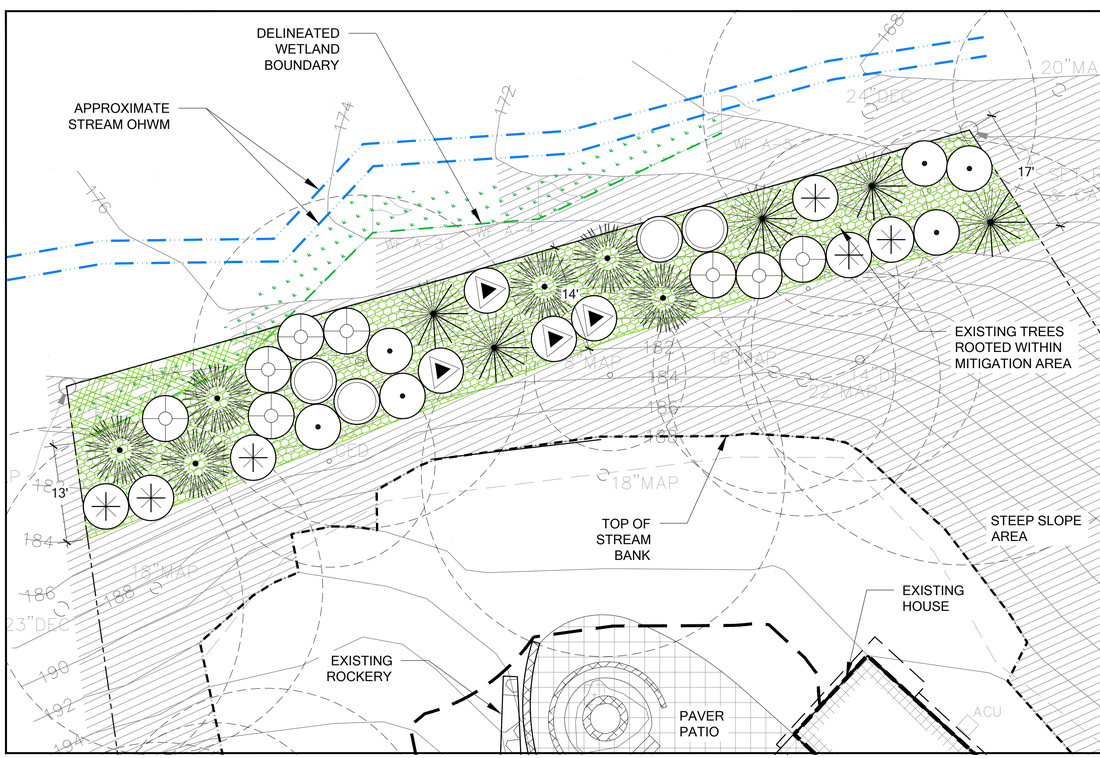

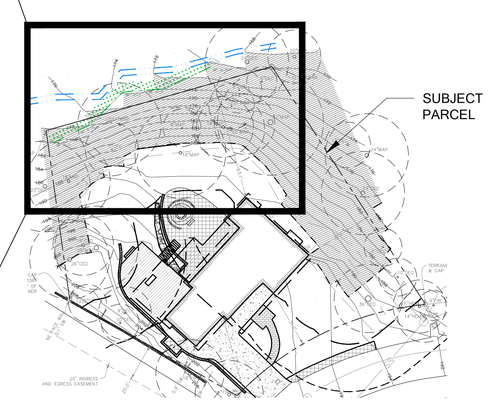

AREA OF DETAIL

LEGEND

- PARCEL BOUNDARY
- DELINEATED WETLAND BOUNDARY
- STREAM OHWM, APPROX. (NOT DELINEATED)
- STANDARD STREAM BUFFER (25 FT)
- STEEP SLOPE AREA
- TOP OF SLOPE / TOP OF BANK
- BUFFER MITIGATION AREA (1,860 SF)
- WETLAND MITIGATION AREA (140 SF)

NOTES

1. WETLAND AND STEEP SLOPE BUFFERS ARE BEYOND EXTENTS OF PLAN. SEE SHEET W3 FOR FULL PLAN EXTENTS.
2. BUFFER MITIGATION AREA IS CALCULATED BASED UPON SURVEYED SITE PLAN. DUE TO STEEP TOPOGRAPHY, SQUARE FOOTAGE CALCULATIONS MAY NEED TO BE FIELD ADJUSTED TO COMPENSATE FOR ANY DISCREPANCIES IN ACTUAL AREA.
3. SEE INVASIVE PLANT REMOVAL AND SITE PREPARATION DETAIL ON SHEET W5.
4. SEE PLANT INSTALLATION DETAILS AND NOTES ON SHEET W5.
5. GROUNDCOVERS SHOULD BE GROUPED BY SPECIES IN GROUPS OF 5-7 PLANTS AND SPACED TRIANGULARLY.

PLANTING PLAN AND SCHEDULE

SCALE 1:10

0' 5' 10' 20' 40'

© Copyright- The Watershed Company

THE WATERSHED COMPANY
750 Sixth Street South
Kirkland WA 98033
p 425.822.5242
www.watershedco.com
Science & Design

STULL RESIDENCE
MITIGATION PLAN
PREPARED FOR: JIM STULL
10042 NE 33RD STREET
PARCEL # 4122300062
BELLEVUE, WA 98004

SUBMITTALS & REVISIONS

NO.	DATE	DESCRIPTION	BY
1	07-24-2019	MITIGATION PLAN	RH
2	12-17-2019	REVISIONS PER CITY COMMENTS	RH

SHEET SIZE:
ORIGINAL PLAN IS 22" x 34".
SCALE ACCORDINGLY.

PROJECT MANAGER: KB
DESIGNED: RH
DRAFTED: RH
CHECKED: MF, KB
JOB NUMBER: 170714
SHEET NUMBER: W4 OF 6

FILENAME
PRINTED BY
DATE

PLANT INSTALLATION SPECIFICATIONS

GENERAL NOTES

QUALITY ASSURANCE
1. PLANTS SHALL MEET OR EXCEED THE SPECIFICATIONS OF FEDERAL, STATE, AND LOCAL LAWS REQUIRING INSPECTION FOR PLANT DISEASE AND INSECT CONTROL.
2. PLANTS SHALL BE HEALTHY, VIGOROUS, AND WELL-FORMED, WITH WELL DEVELOPED, FIBROUS ROOT SYSTEMS, FREE FROM DEAD BRANCHES OR ROOTS. PLANTS SHALL BE FREE FROM DAMAGE CAUSED BY TEMPERATURE EXTREMES, LACK OR EXCESS OF MOISTURE, INSECTS, DISEASE, AND MECHANICAL INJURY. PLANTS IN LEAF SHALL BE WELL FOLIATED AND OF GOOD COLOR. PLANTS SHALL BE HABITUATED TO THE OUTDOOR ENVIRONMENTAL CONDITIONS INTO WHICH THEY WILL BE PLANTED (HARDENED-OFF).
3. TREES WITH DAMAGED, CROOKED, MULTIPLE OR BROKEN LEADERS WILL BE REJECTED. WOODY PLANTS WITH ABRASIONS OF THE BARK OR SUN SCALD WILL BE REJECTED.
4. NOMENCLATURE: PLANT NAMES SHALL CONFORM TO FLORA OF THE PACIFIC NORTHWEST BY HITCHCOCK AND CRONQUIST, UNIVERSITY OF WASHINGTON PRESS, 1973 AND/OR TO A FIELD GUIDE TO THE COMMON WETLAND PLANTS OF WESTERN WASHINGTON & NORTHWESTERN OREGON, ED. SARAH SPEAR COOKE, SEATTLE AUDUBON SOCIETY, 1997.

DEFINITIONS
1. PLANTS/PLANT MATERIALS. PLANTS AND PLANT MATERIALS SHALL INCLUDE ANY LIVE PLANT MATERIAL USED ON THE PROJECT. THIS INCLUDES BUT IS NOT LIMITED TO CONTAINER GROWN, B&B OR BAREROOT PLANTS; LIVE STAKES AND FASCINES (WATTLES); TUBERS, CORMS, BULBS, ETC..; SPRIGS, PLUGS, AND LINERS.
2. CONTAINER GROWN. CONTAINER GROWN PLANTS ARE THOSE WHOSE ROOTBALLS ARE ENCLOSED IN A POT OR BAG IN WHICH THAT PLANT GREW.

SUBSTITUTIONS
1. IT IS THE CONTRACTOR'S RESPONSIBILITY TO OBTAIN SPECIFIED MATERIALS IN ADVANCE IF SPECIAL GROWING, MARKETING OR OTHER ARRANGEMENTS MUST BE MADE IN ORDER TO SUPPLY SPECIFIED MATERIALS.
2. SUBSTITUTION OF PLANT MATERIALS NOT ON THE PROJECT LIST WILL NOT BE PERMITTED UNLESS AUTHORIZED IN WRITING BY THE RESTORATION CONSULTANT.
3. IF PROOF IS SUBMITTED THAT ANY PLANT MATERIAL SPECIFIED IS NOT OBTAINABLE, A PROPOSAL WILL BE CONSIDERED FOR USE OF THE NEAREST EQUIVALENT SIZE OR ALTERNATIVE SPECIES, WITH CORRESPONDING ADJUSTMENT OF CONTRACT PRICE.
4. SUCH PROOF WILL BE SUBSTANTIATED AND SUBMITTED IN WRITING TO THE CONSULTANT AT LEAST 30 DAYS PRIOR TO START OF WORK UNDER THIS SECTION.

INSPECTION
1. PLANTS SHALL BE SUBJECT TO INSPECTION AND APPROVAL BY THE RESTORATION CONSULTANT FOR CONFORMANCE TO SPECIFICATIONS, EITHER AT TIME OF DELIVERY ON-SITE OR AT THE GROWER'S NURSERY. APPROVAL OF PLANT MATERIALS AT ANY TIME SHALL NOT IMPAIR THE SUBSEQUENT RIGHT OF INSPECTION AND REJECTION DURING PROGRESS OF THE WORK.
2. PLANTS INSPECTED ON SITE AND REJECTED FOR NOT MEETING SPECIFICATIONS MUST BE REMOVED IMMEDIATELY FROM SITE OR RED-TAGGED AND REMOVED AS SOON AS POSSIBLE.
3. THE RESTORATION CONSULTANT MAY ELECT TO INSPECT PLANT MATERIALS AT THE PLACE OF GROWTH. AFTER INSPECTION AND ACCEPTANCE, THE RESTORATION CONSULTANT MAY REQUIRE THE INSPECTED PLANTS BE LABELED AND RESERVED FOR PROJECT. SUBSTITUTION OF THESE PLANTS WITH OTHER INDIVIDUALS, EVEN OF THE SAME SPECIES AND SIZE, IS UNACCEPTABLE.

MEASUREMENT OF PLANTS
1. PLANTS SHALL CONFORM TO SIZES SPECIFIED UNLESS SUBSTITUTIONS ARE MADE AS OUTLINED IN THIS CONTRACT.
2. HEIGHT AND SPREAD DIMENSIONS SPECIFIED REFER TO MAIN BODY OF PLANT AND NOT BRANCH OR ROOT TIP TO TIP. PLANT DIMENSIONS SHALL BE MEASURED WHEN THEIR BRANCHES OR ROOTS ARE IN THEIR NORMAL POSITION.
3. WHERE A RANGE OF SIZE IS GIVEN, NO PLANT SHALL BE LESS THAN THE MINIMUM SIZE AND AT LEAST 50% OF THE PLANTS SHALL BE AS LARGE AS THE MEDIAN OF THE SIZE RANGE. (EXAMPLE: IF THE SIZE RANGE IS 12" TO 18", AT LEAST 50% OF PLANTS MUST BE 15" TALL.).

SUBMITTALS

PROPOSED PLANT SOURCES
1. WITHIN 45 DAYS AFTER AWARD OF THE CONTRACT, SUBMIT A COMPLETE LIST OF PLANT MATERIALS PROPOSED TO BE PROVIDED DEMONSTRATING CONFORMANCE WITH THE REQUIREMENTS SPECIFIED. INCLUDE THE NAMES AND ADDRESSES OF ALL GROWERS AND NURSERIES.

PRODUCT CERTIFICATES
1. PLANT MATERIALS LIST - SUBMIT DOCUMENTATION TO CONSULTANT AT LEAST 30 DAYS PRIOR TO START OF WORK UNDER THIS SECTION THAT PLANT MATERIALS HAVE BEEN ORDERED. ARRANGE PROCEDURE FOR INSPECTION OF PLANT MATERIAL WITH CONSULTANT AT TIME OF SUBMISSION.
2. HAVE COPIES OF VENDOR'S OR GROWERS' INVOICES OR PACKING SLIPS FOR ALL PLANTS ON SITE DURING INSTALLATION. INVOICE OR PACKING SLIP SHOULD LIST SPECIES BY SCIENTIFIC NAME, QUANTITY, AND DATE DELIVERED (AND GENETIC ORIGIN IF THAT INFORMATION WAS PREVIOUSLY REQUESTED).

DELIVERY, HANDLING, & STORAGE

NOTIFICATION
CONTRACTOR MUST NOTIFY CONSULTANT 48 HOURS OR MORE IN ADVANCE OF DELIVERIES SO THAT CONSULTANT MAY ARRANGE FOR INSPECTION.

PLANT MATERIALS
1. TRANSPORTATION - DURING SHIPPING, PLANTS SHALL BE PACKED TO PROVIDE PROTECTION AGAINST CLIMATE EXTREMES, BREAKAGE AND DRYING. PROPER VENTILATION AND PREVENTION OF DAMAGE TO BARK, BRANCHES, AND ROOT SYSTEMS MUST BE ENSURED.
2. SCHEDULING AND STORAGE - PLANTS SHALL BE DELIVERED AS CLOSE TO PLANTING AS POSSIBLE. PLANTS IN STORAGE MUST BE PROTECTED AGAINST ANY CONDITION THAT IS DETRIMENTAL TO THEIR CONTINUED HEALTH AND VIGOR.
3. HANDLING - PLANT MATERIALS SHALL NOT BE HANDLED BY THE TRUNK, LIMBS, OR FOLIAGE BUT ONLY BY THE CONTAINER, BALL, BOX, OR OTHER PROTECTIVE STRUCTURE, EXCEPT BAREROOT PLANTS SHALL BE KEPT IN BUNDLES UNTIL PLANTING AND THEN HANDLED CAREFULLY BY THE TRUNK OR STEM.
4. LABELS - PLANTS SHALL HAVE DURABLE, LEGIBLE LABELS STATING CORRECT SCIENTIFIC NAME AND SIZE. TEN PERCENT OF CONTAINER GROWN PLANTS IN INDIVIDUAL POTS SHALL BE LABELED. PLANTS SUPPLIED IN FLATS, RACKS, BOXES, BAGS, OR BUNDLES SHALL HAVE ONE LABEL PER GROUP.

WARRANTY

PLANT WARRANTY
PLANTS MUST BE GUARANTEED TO BE TRUE TO SCIENTIFIC NAME AND SPECIFIED SIZE, AND TO BE HEALTHY AND CAPABLE OF VIGOROUS GROWTH.

REPLACEMENT
1. PLANTS NOT FOUND MEETING ALL OF THE REQUIRED CONDITIONS AT THE CONSULTANT'S DISCRETION MUST BE REMOVED FROM SITE AND REPLACED IMMEDIATELY AT THE CONTRACTOR'S EXPENSE.
2. PLANTS NOT SURVIVING AFTER ONE YEAR TO BE REPLACED AT THE CONTRACTOR'S EXPENSE.

PLANT MATERIAL

GENERAL
1. PLANTS SHALL BE NURSERY GROWN IN ACCORDANCE WITH GOOD HORTICULTURAL PRACTICES UNDER CLIMATIC CONDITIONS SIMILAR TO OR MORE SEVERE THAN THOSE OF THE PROJECT SITE.
2. PLANTS SHALL BE TRUE TO SPECIES AND VARIETY OR SUBSPECIES. NO CULTIVARS OR NAMED VARIETIES SHALL BE USED UNLESS SPECIFIED AS SUCH.

QUANTITIES
SEE PLANT LIST ON ACCOMPANYING PLANS AND PLANT SCHEDULES.

ROOT TREATMENT
1. CONTAINER GROWN PLANTS (INCLUDES PLUGS): PLANT ROOT BALLS MUST HOLD TOGETHER WHEN THE PLANT IS REMOVED FROM THE POT, EXCEPT THAT A SMALL AMOUNT OF LOOSE SOIL MAY BE ON THE TOP OF THE ROOTBALL.
2. PLANTS MUST NOT BE ROOT-BOUND; THERE MUST BE NO CIRCLING ROOTS PRESENT IN ANY PLANT INSPECTED.
3. ROOTBALLS THAT HAVE CRACKED OR BROKEN WHEN REMOVED FROM THE CONTAINER SHALL BE REJECTED.

PLANT INSTALLATION DETAILS AND NOTES

SCALE AS NOTED

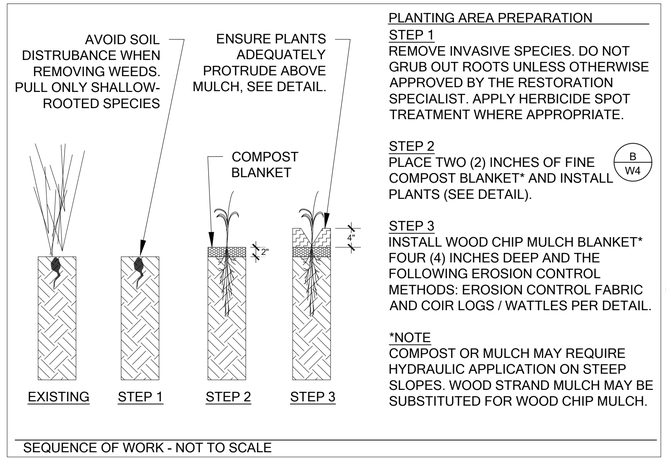

A BUFFER MITIGATION AREA SITE PREPARATION

Scale: NTS

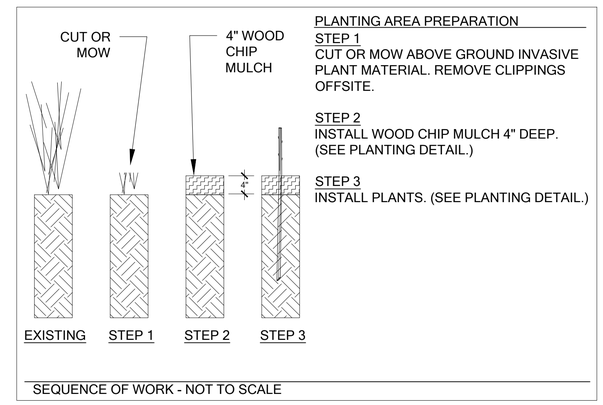

B WETLAND MITIGATION AREA SITE PREPARATION

Scale: NTS

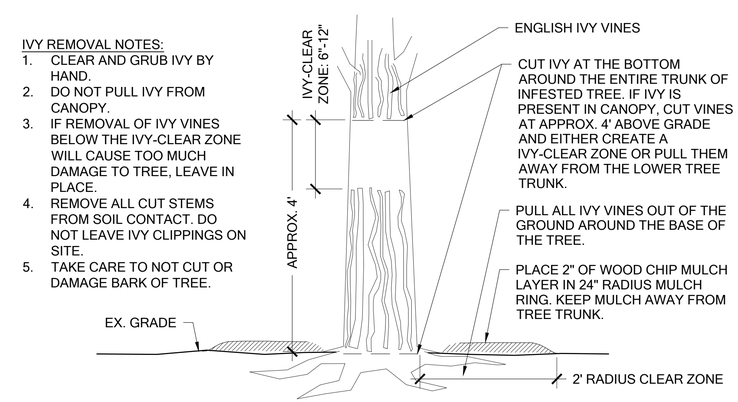

C IVY REMOVAL

Scale: NTS

© Copyright- The Watershed Company

THE WATERSHED COMPANY
750 Sixth Street South
Kirkland WA 98033
p 425.822.5242
www.watershedco.com
Science & Design

STULL RESIDENCE
MITIGATION PLAN
PREPARED FOR: JIM STULL
10042 NE 33RD STREET
PARCEL # 4122300062
BELLEVUE, WA 98004

SUBMITTALS & REVISIONS

NO.	DATE	DESCRIPTION	BY
1	07-24-2019	MITIGATION PLAN	RH
2	12-17-2019	REVISIONS PER CITY COMMENTS	RH

SHEET SIZE:
ORIGINAL PLAN IS 22" x 34". SCALE ACCORDINGLY.

PROJECT MANAGER: KB
DESIGNED: RH
DRAFTED: RH
CHECKED: MF, KB
JOB NUMBER: 170714
SHEET NUMBER: W5 OF 6

FILENAME
PRINTED BY
DATE

MITIGATION PLAN

THIS MITIGATION PLAN HAS BEEN PREPARED AS MITIGATION FOR IMPACTS TO ON-SITE CRITICAL AREA BUFFERS AND SETBACKS AND FULFILLS THE REQUIREMENTS OF LUC 20.25H.220(B). THE PLAN SEEKS TO ENHANCE 1,860 SQUARE FEET ON-SITE STREAM AND WETLAND BUFFERS AND STEEP SLOPE CRITICAL AREAS AS WELL AS 240 SQUARE FEET OF ON-SITE WETLAND AREA. AREAS SUBJECT TO THE PROVISIONS OF THIS MITIGATION PLAN ARE DOMINATED BY NON-NATIVE UNDERSTORY PLANT SPECIES INCLUDING ENGLISH IVY, CHERRY LAUREL, AND HIMALAYAN BLACKBERRY. THE TREE CANOPY IS DOMINATED BY BIG LEAF MAPLE AND RED ALDER.

TO OFFSET PERMANENT PROJECT IMPACTS, THE PLAN CALLS FOR RESTORATION OF A TOTAL OF 2,000 SQUARE FEET OF THE SITE THROUGH THE PLANTING OF NATIVE TREES, SHRUBS AND GROUNDCOVER. TREE SPECIES PROPOSED INCLUDE WESTERN RED CEDAR AND WESTERN HEMLOCK. SHRUBS INCLUDE NOOTKA ROSE, THIMBLEBERRY, SALMONBERRY, RED ELDERBERRY, AND SNOWBERRY. PROPOSED GROUNDCOVERS INCLUDE SALAL, DULL OREGON GRAPE, AND WESTERN SWORDFERN.

ADDITIONALLY, THIS PLAN REQUIRES THE MANAGEMENT OF ENGLISH IVY BY ESTABLISHING IVY CONTROL RINGS PER THE PLAN DETAILS AT THE BASE OF ALL TREES THAT ARE ROOTED WITHIN THE 21,136 SQUARE FOOT PARCEL.

MAINTENANCE AND MONITORING PLAN

THE SITE SHALL BE MAINTAINED AND MONITORED FOR FIVE YEARS FOLLOWING SUCCESSFUL INSTALLATION. COMPONENTS OF THE 5-YEAR MAINTENANCE AND MONITORING PLAN ARE DETAILED BELOW.

GOALS

1. ESTABLISH DENSE NATIVE VEGETATION THAT IS APPROPRIATE TO THE ECO-REGION AND SITE.
2. LIMIT INVASIVE AND/OR NOXIOUS WEED COVER ON-SITE.
3. INCREASE HABITAT COVER AND REFUGE FOR URBAN WILDLIFE SPECIES. PROVIDE PERCHING, NESTING AND FORAGING HABITAT FOR NATIVE BIRDS.

PERFORMANCE STANDARDS

THE STANDARDS LISTED BELOW WILL BE USED TO JUDGE THE SUCCESS OF THE INSTALLATION OVER TIME. IF PERFORMANCE STANDARDS ARE MET AT THE END OF YEAR 5, THE SITE WILL THEN BE DEEMED SUCCESSFUL AND THE PERFORMANCE SECURITY BOND WILL BE ELIGIBLE FOR RELEASE BY THE CITY OF BELLEVUE.

1. SURVIVAL: THIS STANDARD CAN BE MET THROUGH PLANT ESTABLISHMENT OR THROUGH REPLANTING IN THE FOLLOWING DORMANT SEASON AS NECESSARY TO ACHIEVE THE REQUIRED NUMBERS.
   - A. ACHIEVE 100% SURVIVAL OF ALL INSTALLED PLANTS BY THE END OF YEAR 1(FROM DATE OF PLANT INSTALLATION).
   - B. ACHIEVE 90% SURVIVAL OF ALL INSTALLED PLANTS BY THE END OF YEAR 2 (FROM DATE OF PLANT INSTALLATION).
   - C. ACHIEVE 85% SURVIVAL OF ALL INSTALLED PLANTS BY THE END OF YEAR 3, 4, AND 5 (FROM DATE OF PLANT INSTALLATION).
2. NATIVE PLANT COVER:
   - A. ACHIEVE 40% UNDERSTORY COVER OF NATIVE SAPLING TREES, SHRUBS AND GROUNDCOVER BY YEAR 2. RETAINED VEGETATION AND NATIVE VOLUNTEER SPECIES MAY COUNT TOWARDS THIS COVER STANDARD.
   - B. ACHIEVE 60% UNDERSTORY COVER OF NATIVE SAPLING TREES, SHRUBS AND GROUNDCOVER BY YEAR 3. RETAINED VEGETATION AND NATIVE VOLUNTEER SPECIES MAY COUNT TOWARDS THIS COVER STANDARD.
   - C. ACHIEVE 80% UNDERSTORY COVER OF NATIVE SAPLING TREES, SHRUBS AND GROUNDCOVER BY YEAR 5. RETAINED VEGETATION AND NATIVE VOLUNTEER SPECIES MAY COUNT TOWARDS THIS COVER STANDARD.
3. SPECIES DIVERSITY: ESTABLISH AT LEAST TWO NATIVE TREE, FOUR NATIVE SHRUB, AND TWO NATIVE GROUNDCOVER SPECIES BY YEAR 3 AND MAINTAIN THIS DIVERSITY THROUGH YEAR 5. NATIVE VOLUNTEER SPECIES MAY COUNT TOWARDS THIS STANDARD.
4. INVASIVE COVER: AERIAL COVER FOR ALL NON-NATIVE, INVASIVE AND NOXIOUS WEEDS WILL NOT EXCEED 10% AT ANY YEAR DURING THE MONITORING PERIOD. INVASIVE PLANTS INCLUDE BUT ARE NOT LIMITED TO HIMALAYAN BLACKBERRY (RUBUS ARMENIACUS), CUT LEAF BLACKBERRY (RUBUS LACINIATUS), KNOTWEEDS (POLYGONUM CUSPIDATUM AND OTHERS), REED CANARYGRASS (PHALARIS ARUNDINACEA), CHERRY LAUREL (PRUNUS LAUROCERASUS), ENGLISH HOLLY (ILEX AQUIFOLIUM), AND IVY SPECIES (HEDERA SPP.).
   - A. MAINTAIN IVY CONTROL RINGS PER PLAN.

MONITORING METHODS

THIS MONITORING PROGRAM IS DESIGNED TO TRACK THE SUCCESS OF THE MITIGATION SITE OVER TIME AND TO MEASURE THE DEGREE TO WHICH THE SITE IS MEETING THE PERFORMANCE STANDARDS OUTLINED IN THE PRECEDING SECTION.

AN AS-BUILT PLAN WILL BE PREPARED BY THE RESTORATION PROFESSIONAL PRIOR TO THE BEGINNING OF THE MONITORING PERIOD. THE AS-BUILT PLAN WILL BE A MARK-UP OF THE PLANTING PLANS INCLUDED IN THIS PLAN SET. THE AS-BUILT PLAN WILL DOCUMENT ANY DEPARTURES IN PLANT PLACEMENT OR OTHER COMPONENTS FROM THE PROPOSED PLAN.

MONITORING WILL TAKE PLACE ONCE ANNUALLY IN THE FALL FOR FIVE YEARS. YEAR-1 MONITORING WILL COMMENCE IN THE FIRST FALL SUBSEQUENT TO INSTALLATION.

THE FORMAL MONITORING VISIT SHALL RECORD AND REPORT THE FOLLOWING IN AN ANNUAL REPORT SUBMITTED TO THE CITY OF BELLEVUE:

1. VISUAL ASSESSMENT OF THE OVERALL SITE, INCLUDING IVY CONTROL RINGS LOCATED OUTSIDE OF THE MITIGATION AREA.
2. YEAR-1 COUNTS OF LIVE AND DEAD PLANTS BY SPECIES. YEAR-2 THROUGH YEAR-5 COUNTS OF ESTABLISHED NATIVE TREES AND SHRUBS BY SPECIES, TO THE EXTENT FEASIBLE.
3. COUNTS OF DEAD PLANTS WHERE MORTALITY IS SIGNIFICANT IN ANY MONITORING YEAR.
4. ESTIMATE OF NATIVE COVER IN THE MITIGATION AREA.
5. ESTIMATE OF NON-NATIVE, INVASIVE WEED COVER IN THE MITIGATION AREA.
6. TABULATION OF ESTABLISHED NATIVE SPECIES, INCLUDING BOTH PLANTED AND VOLUNTEER SPECIES.
7. PHOTOGRAPHIC DOCUMENTATION FROM AT LEAST THREE FIXED REFERENCE POINTS.
8. ANY INTRUSIONS INTO OR CLEARING OF THE PLANTING AREAS, VANDALISM, OR OTHER ACTIONS THAT IMPAIR THE INTENDED FUNCTIONS OF THE MITIGATION AREA.
9. RECOMMENDATIONS FOR MAINTENANCE OR REPAIR OF ANY PORTION OF THE MITIGATION AREA.

MAINTENANCE

THE SITE WILL BE MAINTAINED IN ACCORDANCE WITH THE FOLLOWING INSTRUCTIONS FOR AT LEAST FIVE YEARS FOLLOWING COMPLETION OF CONSTRUCTION:

1. FOLLOW THE RECOMMENDATIONS NOTED IN THE PREVIOUS MONITORING SITE VISIT.
2. GENERAL WEEDING FOR ALL PLANTED AREAS:
   - A. AT LEAST TWICE YEARLY, REMOVE ALL COMPETING WEEDS AND WEED ROOTS FROM BENEATH EACH INSTALLED PLANT AND ANY DESIRABLE VOLUNTEER VEGETATION TO A DISTANCE OF 18 INCHES FROM THE MAIN PLANT STEM. WEEDING SHOULD OCCUR AT LEAST TWICE DURING THE SPRING AND SUMMER. FREQUENT WEEDING WILL RESULT IN LOWER MORTALITY, LOWER PLANT REPLACEMENT COSTS, AND INCREASED LIKELIHOOD THAT THE PLAN MEETS PERFORMANCE STANDARDS BY YEAR 5.
   - B. MORE FREQUENT WEEDING MAY BE NECESSARY DEPENDING ON WEED CONDITIONS THAT DEVELOP AFTER PLAN INSTALLATION.
   - C. DO NOT WEED THE AREA NEAR THE PLANT BASES WITH STRING TRIMMER (WEED WHACKER/WEED EATER). NATIVE PLANTS ARE EASILY DAMAGED OR KILLED, AND WEEDS EASILY RECOVER AFTER TRIMMING.
   - D. SELECTIVE APPLICATIONS OF HERBICIDE MAY BE NEEDED TO CONTROL INVASIVE WEEDS, ESPECIALLY WHEN INTERMIXED WITH NATIVE SPECIES. HERBICIDE APPLICATION, WHEN NECESSARY, SHALL BE CONDUCTED ONLY BY A STATE-LICENSED APPLICATOR.
3. APPLY SLOW-RELEASE, GRANULAR FERTILIZER TO EACH INSTALLED PLANT ANNUALLY IN THE SPRING (BY JUNE 1) OF YEARS 2 THROUGH 5.
4. REPLACE MULCH AS NECESSARY TO MAINTAIN A 4-INCH-THICK LAYER, RETAIN SOIL MOISTURE, AND LIMIT WEEDS.
5. REPLACE EACH PLANT FOUND DEAD IN THE SUMMER MONITORING VISITS DURING THE UPCOMING DORMANT SEASON (OCTOBER 15 TO MARCH 1), FOR BEST SURVIVAL.
6. THE PROPERTY OWNER WILL ENSURE THAT WATER IS PROVIDED FOR THE ENTIRE PLANTED AREA WITH A MINIMUM OF 1 INCH OF WATER PER WEEK FROM JUNE 1 THROUGH SEPTEMBER 30 FOR THE FIRST TWO YEARS FOLLOWING INSTALLATION, THROUGH THE OPERATION OF A TEMPORARY IRRIGATION SYSTEM. LESS WATER IS NEEDED DURING MARCH, APRIL, MAY AND OCTOBER.
7. MAINTAIN IVY CONTROL RINGS AROUND ALL TREES AT LEAST TWICE YEARLY PER PLAN.

CONSTRUCTION NOTES AND SPECIFICATIONS

THE RESTORATION PROFESSIONAL WILL MONITOR:

1. ALL SITE PREPARATION.
   - A. COIR LOG INSTALLATION.
   - B. WEED REMOVAL.
   - C. GEOTEXTILE FABRIC APPLICATION.
   - D. IVY CONTROL RING INSTALLATION.
   - E. MULCH PLACEMENT.
2. PLANT MATERIAL INSPECTION.
   - A. PLANT MATERIAL DELIVERY INSPECTION.
   - B. 100% PLANT INSTALLATION INSPECTION.

GENERAL WORK SEQUENCE

SITE PREPARATION

1. INSTALL COIR LOG OR STRAW WATTLE PER PLANS.
2. MANUALLY CLEAR INVASIVE AND ORNAMENTAL VEGETATION FROM MITIGATION AREA AND IVY CONTROL RINGS DURING SPRING AND/OR SUMMER MONTHS (I.E., AVOID CREATING EXPOSED SOIL CONDITIONS DURING THE WINTER STORM SEASON).
   - A. REMOVE INVASIVE SPECIES (I.E., HIMALAYAN BLACKBERRY, ENGLISH IVY), IN ACCORDANCE WITH KING COUNTY NOXIOUS WEED BEST MANAGEMENT PRACTICES. FOR MORE INFORMATION: HTTPS://WWW.KINGCOUNTY.GOV/SERVICES/ENVIRONMENT/ANIMALS-AND-PLANTS/NOXIOUS-WEEDS.ASPX.
   - B. CUT UNDESIRABLE VEGETATION. LEAVE ROOTS INTACT TO MINIMIZE POTENTIAL IMPACTS TO SLOPES ON ADJACENT PROPERTIES.
   - C. FLUSH-CUT ORNAMENTAL WOODY VEGETATION (E.G. ENGLISH HOLLY, NON-NATIVE APPLE OR PLUM) THROUGHOUT MITIGATION AREA AND IMMEDIATELY TREAT STEM (DAUBING OR PAINTING) WITH APPROPRIATE HERBICIDE. PERSON APPLYING HERBICIDE SHALL BE STATE-LICENSED. DO NOT REMOVE SUBSURFACE ROOTS.
   - D. AVOID AND MINIMIZE DISTURBANCE AND/OR COMPACTION TO ROOTS OF ESTABLISHED NATIVE TREES TO BE RETAINED WHEN REMOVING VEGETATION FROM WITHIN TREE DRIPLINES.
3. BLANKET-MULCH CLEARED AREAS INCLUDING IVY CONTROL RINGS WITH WOOD MULCH, FOUR INCHES THICK.
   - A. ENSURE MULCH DOES NOT TOUCH STEMS OF EXISTING (OR INSTALLED) VEGETATION. SEE PLANTING DETAIL ON SHEET W5.
4. INSTALL GEOTEXTILE FABRIC ON CLEARED MITIGATION AREA PER PLAN DETAIL.

MITIGATION PLANTING AND IRRIGATION

5. INSTALL MITIGATION PLANTS DURING THE DORMANT SEASON (OCTOBER 15 - MARCH 1).
   - A. PREPARE A PLANTING PIT FOR EACH PLANT THROUGH BLANKET WOOD MULCH AND GEOTEXTILE FABRIC AND INSTALL PER THE PLANTING DETAILS.
6. INSTALL A TEMPORARY, ABOVE GROUND IRRIGATION SYSTEM TO PROVIDE FULL COVERAGE TO ALL INSTALLED PLANTS WITHIN THE RESTORATION AREA.

MATERIAL SPECIFICATIONS AND DEFINITIONS

1. FERTILIZER: SLOW RELEASE, GRANULAR PHOSPHOROUS-FREE FERTILIZER. FOLLOW MANUFACTURER'S INSTRUCTIONS FOR APPLICATION. KEEP FERTILIZER IN A WEATHER-TIGHT CONTAINER WHILE ON SITE. NOTE THAT FERTILIZER IS TO BE APPLIED ONLY IN YEARS 2 THROUGH 5 AND NOT IN THE FIRST YEAR.
2. FERTILIZER (FOR NEAR AQUATIC ENVIRONMENTS): SLOW-RELEASE, PHOSPHOROUS-FREE GRANULAR FERTILIZER. LABEL MUST INDICATE THAT PRODUCT IS SAFE FOR AQUATIC ENVIRONMENTS. FOLLOW MANUFACTURER'S INSTRUCTIONS FOR USE. KEEP FERTILIZER IN WEATHER-TIGHT CONTAINER WHILE ON-SITE. FERTILIZER IS ONLY TO BE APPLIED IN YEARS 2 AND 3, NOT IN YEAR ONE.
3. IRRIGATION SYSTEM: AUTOMATED SYSTEM CAPABLE OF DELIVERING AT LEAST ONE INCH OF WATER PER WEEK FROM JUNE 1 THROUGH SEPTEMBER 30 FOR THE FIRST TWO YEARS FOLLOWING INSTALLATION.
4. RESTORATION PROFESSIONAL: WATERSHED COMPANY [(425) 822-5242] PERSONNEL, OR OTHER PERSONS QUALIFIED TO EVALUATE ENVIRONMENTAL RESTORATION PROJECTS.
5. WOODCHIP MULCH: "ARBORIST CHIPS" (CHIPPED WOODY MATERIAL) APPROXIMATELY ONE TO THREE INCHES IN MAXIMUM DIMENSION (NOT SAWDUST). THIS MATERIAL IS COMMONLY AVAILABLE IN LARGE QUANTITIES FROM ARBORISTS OR TREE-PRUNING COMPANIES. MULCH SHALL NOT CONTAIN APPRECIABLE QUANTITIES OF GARBAGE, PLASTIC, METAL, SOIL, AND DIMENSIONAL LUMBER OR CONSTRUCTION/DEMOLITION DEBRIS.
6. TOPSOIL: TOPSOIL SHALL BE A 3-WAY MIXTURE OF APPROXIMATELY 33-50% COMPOST AND 50-65% SAND OR SANDY LOAM. ALL COMPONENTS SHALL BE FREE OF PHYTO-TOXIC MATERIALS AND VIABLE SEEDS, RHIZOMES, OR ROOTS OF STATE-LISTED NOXIOUS WEEDS.
7. COMPOST: COMPOST SHALL MEET WSDOT STANDARDS SPECIFICATIONS FOR ROAD, BRIDGE, AND MUNICIPAL CONSTRUCTION, 9-14.4(8) FOR FINE COMPOST.

CONTINGENCIES

IF THERE IS A SIGNIFICANT PROBLEM WITH THE RESTORATION AREAS MEETING PERFORMANCE STANDARDS, A CONTINGENCY PLAN WILL BE DEVELOPED AND IMPLEMENTED. CONTINGENCY PLANS CAN INCLUDE, BUT ARE NOT LIMITED TO: SOIL AMENDMENT, ADDITIONAL PLANT INSTALLATION, AND PLANT SUBSTITUTIONS OF TYPE, SIZE, QUANTITY, AND LOCATION.

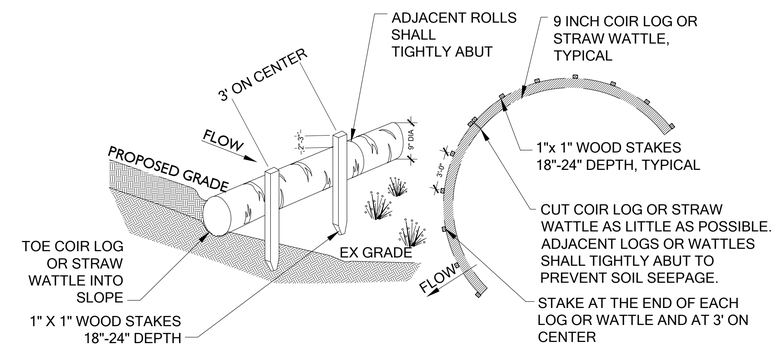

PLAN

NOTES

1. COIR LOG OR STRAW WATTLE SHALL BE INSTALLED PRIOR TO SITE CLEARING AND PREPARATION.
2. COIR LOG OR STRAW WATTLE SHALL BE 9 INCH IN DIAMETER.
3. STAKING: WOODEN STAKES ARE RECOMMENDED TO SECURE THE COIR LOG OR STRAW WATTLE. BE SURE TO USE A STAKE THAT IS LONG ENOUGH TO PROTRUDE SEVERAL INCHES ABOVE THE COIR LOG OR STRAW WATTLE: 18" IS A GOOD LENGTH FOR HARD, ROCKY SOIL; FOR SOFT LOAMY SOIL USE A 24" STAKE.
4. WHEN INSTALLING RUNNING LENGTHS OF COIR LOG OR STRAW WATTLE, BUTT THE SECOND LOG TIGHTLY AGAINST THE FIRST; DO NOT OVERLAP THE ENDS.
5. STAKE THE LOGS OR WATTLES AT EACH END AND THREE (3) FEET ON CENTER. STAKES SHOULD BE DRIVEN OUTSIDE THE COIR LOG OR STRAW WATTLE, BUT CLOSE ENOUGH TO HOLD IT IN PLACE. LEAVE 2 - 3 INCHES OF THE STAKE PROTRUDING ABOVE THE COIR LOG OR STRAW WATTLE. A HEAVY SEDIMENT LOAD WILL TEND TO PICK UP THE COIR LOG OR STRAW WATTLE AND COULD PULL IT OFF THE STAKES IF THEY ARE DRIVEN DOWN TOO LOW.
6. WHEN COIR LOG OR STRAW WATTLE ARE USED FOR FLAT GROUND APPLICATIONS, DRIVE THE STAKES STRAIGHT DOWN; WHEN INSTALLING COIR LOG OR STRAW WATTLE ON SLOPES, DRIVE THE STAKES PERPENDICULAR TO THE SLOPE. DRIVE THE FIRST END STAKE OF THE SECOND COIR LOG OR STRAW WATTLE AT AN ANGLE TOWARD THE FIRST COIR LOG OR STRAW WATTLE IN ORDER TO HELP ABUT THEM TIGHTLY TOGETHER.

(A) COIR LOG / STRAW WATTLE

Scale: NTS

MITIGATION PLAN NOTES

SCALE AS NOTED

© Copyright- The Watershed Company

THE WATERSHED COMPANY
750 Sixth Street South
Kirkland WA 98033
p 425.822.5242
www.watershedco.com
Science & Design

STULL RESIDENCE
MITIGATION PLAN
PREPARED FOR: JIM STULL
10042 NE 33RD STREET
PARCEL # 4122300062
BELLEVUE, WA 98004

SUBMITTALS & REVISIONS

NO.	DATE	DESCRIPTION	BY
1	07-24-2019	MITIGATION PLAN	RH
2	12-17-2019	REVISIONS PER CITY COMMENTS	RH

SHEET SIZE:
ORIGINAL PLAN IS 22" x 34".
SCALE ACCORDINGLY.

PROJECT MANAGER: KB
DESIGNED: RH
DRAFTED: RH
CHECKED: MF, KB
JOB NUMBER: 170714

FILENAME
PRINTED BY
DATE

SHEET NUMBER:
W6 OF 6