DEVELOPMENT SERVICES DEPARTMENT
ENVIRONMENTAL COORDINATOR
450 110th Ave NE
BELLEVUE, WA 98009-9012

DETERMINATION OF NON-SIGNIFICANCE

PROPONENT: Greg Ashley

LOCATION OF PROPOSAL: 4737 Lakehurst Ln

DESCRIPTION OF PROPOSAL: Installation of one (1) ground-based boatlift and two (2) dock-mounted personal watercraft lifts.

FILE NUMBERS: 18-110825-WG **PLANNER:** David Wong

The Environmental Coordinator of the City of Bellevue has determined that this proposal does not have a probable significant adverse impact upon the environment. An Environmental Impact Statement (EIS) is not required under RCW 43.21C.030(2)(C). This decision was made after the Bellevue Environmental Coordinator reviewed the completed environmental checklist and information filed with the Land Use Division of the Development Services Department. This information is available to the public on request.

☐ There is no comment period for this DNS. There is a 14-day appeal period. Only persons who submitted written comments before the DNS was issued may appeal the decision. A written appeal must be filed in the City Clerk's office by 5:00 p.m. on _____.

☒ This DNS is issued after using the optional DNS process in WAC 197-11-355. There is no further comment period on the DNS. There is a 14-day appeal period. Only persons who submitted written comments before the DNS was issued may appeal the decision. A written appeal must be filed in the City Clerk's Office by 5 p.m. on **9/5/2019**

☐ This DNS is issued under WAC 197-11-340(2) and is subject to a 14-day comment period from the date below. Comments must be submitted by 5 p.m. on _____. This DNS is also subject to appeal. A written appeal must be filed in the City Clerk's Office by 5:00 p.m. on _____.

This DNS may be withdrawn at any time if the proposal is modified so as to have significant adverse environmental impacts; if there is significant new information indicating a proposals probable significant adverse environmental impacts (unless a non-exempt license has been issued if the proposal is a private project): or if the DNS was procured by misrepresentation or lack of material disclosure.

Environmental Coordinator
Elizabeth Stead

8/22/2019
Date

OTHERS TO RECEIVE THIS DOCUMENT:
☒ State Department of Fish and Wildlife / Stewart.Reinbold@dfw.gov; Christa.Heller@dfw.wa.gov;
☒ State Department of Ecology, Shoreline Planner N.W. Region / Jobu461@ecy.wa.gov; sepaunit@ecy.wa.gov
☒ Army Corps of Engineers Susan.M.Powell@nws02.usace.army.mil
☒ Attorney General ecyolyef@atg.wa.gov
☒ Muckleshoot Indian Tribe Karen.Walter@muckleshoot.nsn.us; Fisheries.fileroom@muckleshoot.nsn.us

City of Bellevue
Development Services Department
Land Use Staff Report

Proposal Name:	**Min Boat Lift**
Proposal Address:	**4737 Lakehurst Ln**
Proposal Description:	Shoreline Substantial Development Permit to install one (1) ground-based boatlift and two (2) dock-mounted personal watercraft lifts.
File Number:	18-110825-WG
Applicant:	Greg Ashley, Ashley Shoreline Design and Permitting
Decisions Included:	Shoreline Substantial Development Permit (Process II. LUC 20.30R)
Planner:	David Wong, Planner
State Environmental Policy Act Threshold Determination:	**Determination of Non-Significance** Elizabeth Stead, Environmental Coordinator Development Services Department
Director's Decision:	**Approval with Conditions** Michael Brennan, Director Development Services Department **By:** _____ Elizabeth Stead, Land Use Director

Date of Application:	April 10, 2018
Notice of Application:	November 8, 2018
Decision Publication Date:	August 22, 2019

Deadline For Appeal of Process II Administrative Decisions:

SEPA Determination:	September 5, 2019
Shoreline Substantial Development Permit:	(21 days following publication of a notice of decision)

For information on how to appeal a project proposal, visit the Permit Center at City Hall or call 425-452-6800. Appeal of any Process II Administrative decision must be made by 5 p.m. on the date noted for appeal of the decision. Appeal of the SEPA Threshold Determination must be made to the City of Bellevue City Clerk's Office. Appeal of the Shoreline Substantial Development Permit must be made to the Washington State Shoreline Hearings Board (contact the project planner for more information on how to file an appeal with the Shoreline Hearings Board).

CONTENTS

I. Proposal Description 1

II. Site Description, Zoning, Land Use and Critical Areas 2

III. Consistency with Land Use Code Requirements: 3

IV. Public Notice and Comment 5

V. Summary of Technical Reviews 7

VI. State Environmental Policy Act (SEPA) 7

VII. Decision Criteria 7

VIII. Conclusion and Decision 8

IX. Conditions of Approval 8

Attachments:

A. Site Plan
B. Environmental Checklist (in file)

I. Proposal Description

Applicant requests approval to install one (1) new ground-based boatlift and two (2) dock-mounted personal watercraft lifts associated with the existing residential dock. The proposed conditions would locate the boatlift at the western side of the existing dock and the dock-mounted personal watercraft lifts on the north side of the dock. The proposal is limited to installation of the boatlift and personal watercraft lifts and does not include modification of the existing residential pier. See Figure 1 for information on the proposed conditions.

Figure 1

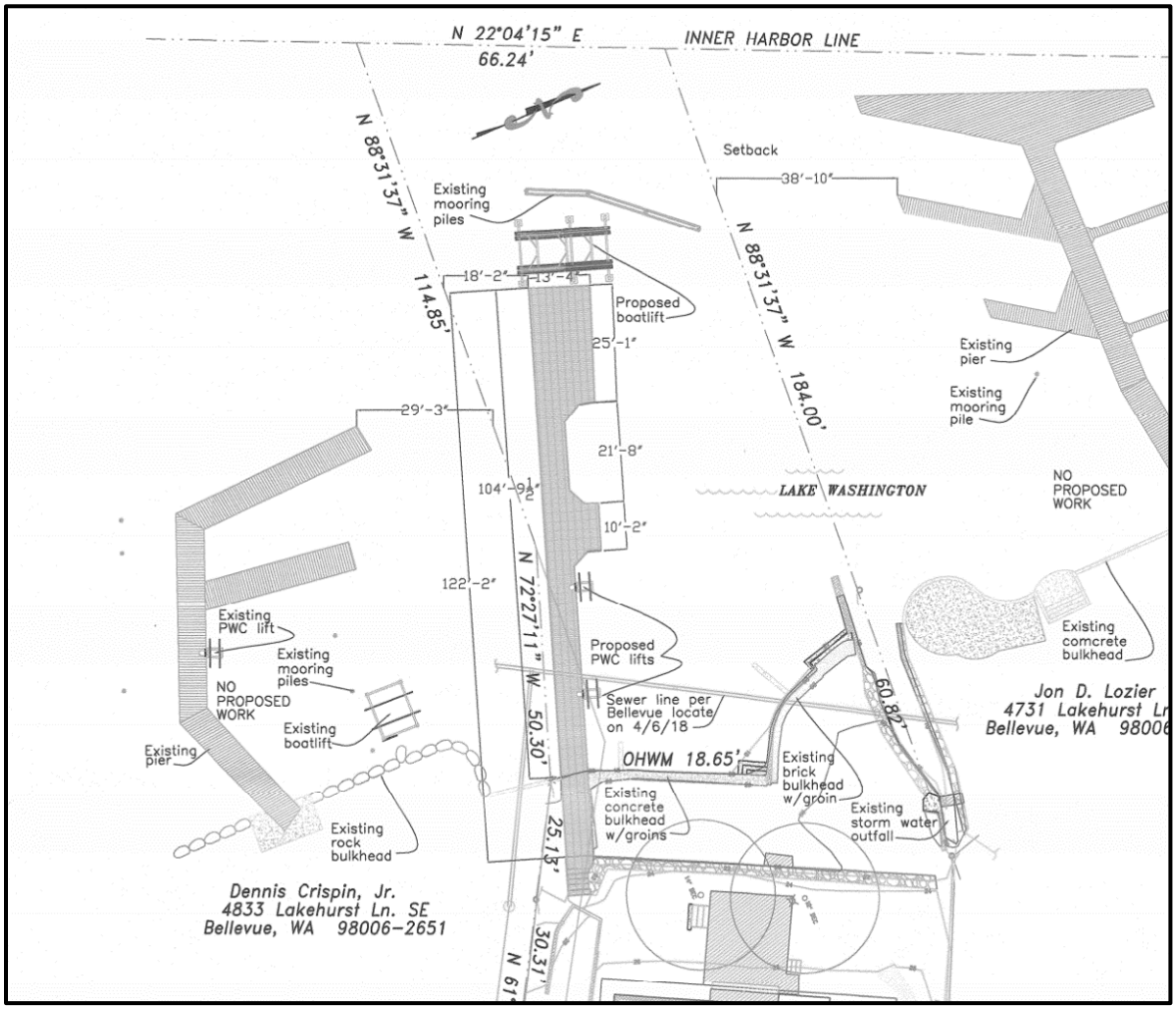

The proposed project is subject to the Shoreline Substantial Development Permit and SEPA requirements because the proposed work is within a shoreline of statewide significance. The applicant submitted this application for review prior to adoption of the most-recent Shoreline Management Program (SMP) and therefore is subject to the prior SMP requirements. The total cost of the proposed work exceeds the threshold allowance of $2,500 granted in LUC 20.25E.050.A of the prior code and therefore requires a Shoreline Substantial Development Permit review. The provisions of the Shoreline and Critical Areas Overlay Districts apply.

II. Site Description, Zoning, Land Use and Critical Areas

A. Site Description and Land Use Context

The subject site is located in the Factoria subarea. Properties in the vicinity are generally developed with single family residences and residential docks. The exception to the residential development is a linear King County Parks-owned parcel running north-south that exists to the east of the site. The neighborhood is characterized by mature trees and highly-developed shoreline properties. The adjacent property to the south is developed with a residential pier.

B. Zoning

The property is zoned R-2.5 and is located within the Shoreline Overlay District per LUC 20.25E. Properties in the vicinity are also within the R-2.5 and R-4 zoning district which are single-family medium- and high-density residential zone that permits up to 2.5 and 4 dwelling units per acre.

C. Shoreline & Critical Area Functions

i. Shorelines

Shorelines provide a variety of functions including shade, temperature control, water purification, woody debris recruitment, channel, bank and beach erosion, sediment delivery, and terrestrial-based food supply (Gregory et al. 1991; Naiman et al. 1993; Spence et al.1996). Shorelines provide a wide variety of functions related to aquatic and riparian habitat, flood control and water quality, economic resources, and recreation, among others. Each function is a product of physical, chemical, and biological processes at work within the overall landscape. In lakes, these processes take place within an integrated system (ecosystem) of coupled aquatic and riparian habitats (Schindler and Scheuerell 2002). Hence, it is important to have an ecosystem approach which incorporates an understanding of shoreline functions and values.

ii. Habitat Associated with Species of Local Importance

The increase in human settlement density and associated intensification of land use known as urbanization has a profound and lasting effect on the natural environment and wildlife habitat (McKinney 2002, Blair 2004, Marzluff 2005, Munns 2006), is a major cause of native species local extinctions (Czech et al 2000), and is likely to become the primary cause of extinctions in the coming century (Marzluff et al. 2001a). Cities are typically located along rivers, on coastlines, or near large bodies of water. The associated floodplains and riparian systems make up a relatively small percentage of land cover in the western United States, yet they provide habitat for rich wildlife communities (Knopf et al. 1988), which in turn provide a source for urban habitat patches or reserves. Consequently, urban areas can support rich wildlife communities. In fact, species richness peaks for some groups, including songbirds, at an intermediate level of development (Blair 1999, Marzluff 2005).Protected wild areas alone cannot be depended on to conserve wildlife species. Impacts from catastrophic events, environmental changes, and evolutionary processes (genetic drift, inbreeding, colonization) can be magnified when a taxonomic group or unit is confined to a specific area, and no one area or group of areas is likely to support the biological processes necessary to maintain biodiversity over a range of geographic scales (Shaughnessy and O'Neil 2001). As well, typological approaches to taxonomy or the use of indicators present the risk that evolutionary potential will be lost when depending on reserves for preservation (Rojas 2007). Urban habitat is a vital link in the process of wildlife conservation in the U.S.

Properties within the Shoreline and Critical Area Overlays are part of the city's shoreline master program and are classified as environmentally sensitive. The master program recognizes the site as a shoreline residential environment subject to the provisions of the City's Shoreline Master Program as discussed below.

III. Consistency with Land Use Code (LUC) Requirements:

A. Zoning District Dimensional Requirements:

The site is located in the R-2.5 zoning district. There are no general dimensional requirements applicable to the subject proposal.

B. Shoreline Master Program Requirements LUC 20.25E:

i. General Regulations Applicable to All Land Use Districts and Activities LUC 20.25E.080.B

a. Where applicable, all federal and state water quality and effluent standards shall be met.

Finding: The project will be constructed and operated consistent with applicable federal state and local regulations regarding water quality and effluent standards. **See Conditions of Approval in Section IX of this report.**

b. If a property extends into the Shoreline Overlay District, the Shoreline Master Program Policies and these use regulations shall apply only to that portion of the property lying within the Shoreline Overlay District.

Finding: The entire project is within Lake Washington and therefore, is entirely within the Shoreline Overlay District. As such, the Shoreline Master Program Policies and these use regulations are applicable to the entire project site.

c. All development within the Shoreline Overlay District shall be accompanied by a plan indicating methods of preserving shoreline vegetation and for control of erosion during and following construction in accordance with Part 20.25H LUC, City of Bellevue Clearing and Grading regulations, Chapter 23.76 BCC, and the Comprehensive Plan.

Finding: No work is proposed to occur upland of the ordinary high water mark or within the Shoreline Buffer. No vegetation is proposed to be removed as part of this project. Final verification of this requirement will be required under the required Clearing & Grading Permit. **See Conditions of Approval in Section IX of this report.**

d. Special care shall be exercised to preserve vegetation in wetland, shoreline and stream corridor bank areas in order to prevent soil erosion. Removal of vegetation from or disturbance of shoreline critical areas and shoreline critical area buffers, and from other critical area and critical area buffers shall be

prohibited, except in conformance with Part 20.25H LUC and the specific performance standards of this section.

Finding: As discussed section c above, no vegetation is proposed for removal under this scope of work.

e. **Maximum height limitation for any proposed structure within the Shoreline Overlay District shall be 35 feet, except in land use districts with more restrictive height limitations. The method of measuring the maximum height is described in WAC 173-14-030(6). Variances to this height limitation may be granted pursuant to Part 20.30H LUC.**

Finding: The installation of the ground-based boatlift and the two dock-mounted personal watercraft lifts does not result in the location or construction of structural improvements or structures exceeding 35 feet in height within the Shoreline Overlay District. Equipment used to operate the two personal watercrafts lifts is proposed to extend three (3) feet above the existing dock surface and approximately 4.33 feet above OHWM.

f. **The Bellevue Shoreline Master Program, in conjunction with existing Bellevue land use ordinances and Comprehensive Plan policies, shall guide all land use decisions in the Shoreline Overlay District.**

Finding: The proposal is consistent with the existing Bellevue Land Use ordinances and will continue the water dependent use associated with the site.

g. **Any development within the Shoreline Overlay District shall comply with all applicable Bellevue ordinances, including but not limited to the Bellevue Land Use Code, Sign Code, and Clearing and Grading regulations.**

Finding: The proposal will be required to obtain a Clearing & Grading Permit and must meet all City of Bellevue Land Use ordinances. Approval and permit issuance will be verification of compliance with applicable regulations.

h. **The dead storage of watercraft seaward of the ordinary high water mark of the shoreline is prohibited.**

Finding: Not applicable. No dead storage of watercraft is proposed.

i. **Where applicable, state and federal standards for the use of herbicides, pesticides and/or fertilizers shall be met, unless superseded by City of Bellevue ordinances. Use of such substances in the shoreline critical area and shoreline critical area buffer shall comply with the City's "Environmental Best Management Practices."**

Finding: Not applicable. No herbicides, pesticides and/or fertilizers are proposed for use.

j. Adequate storm drainage and sewer facilities must be operational prior to construction of new development within the Shoreline Overlay District. Storm drainage facilities shall be separated from sewage disposal systems.

Finding: Not applicable. No new development requiring storm or sewer drainage facilities is proposed.

ii. The project site is in the Shoreline Overlay District and is subject to the regulations regarding moorage (LUC 20.25E.080.N.5 and N.6).

Boatlift Development Standards
Installation, repair, maintenance, replacement, or retention of one ground-based or floating watercraft lift without a canopy, per adjacent upland property and the placement of no more than two cubic yards of fill to anchor the lift is permitted. Fill must be clean, consist of rock or pre-cast concrete blocks, must only be used to anchor the watercraft lift, and must be the minimum amount to anchor the watercraft lift.

Finding: No fill is proposed for the installation of the boatlift.

IV. Public Notice and Comment

Date of Application: April 10, 2018
Notice of Application: November 8, 2018
Minimum Comment Period: November 22, 2018

The Notice of Application for this project was published in the City of Bellevue Weekly Permit Bulletin on November 8, 2019. It was mailed to property owners within 500 feet of the project site. Staff received five (5) comments prior to the writing of this report.

Summary of Comments:

Comment:
The dock is non-conforming and may not have been legally constructed.

Response:
The existing pier is non-conforming and was constructed prior to the adoption (2006) of the SMP this application is subject to. The pier was repaired and modified under COB Permit 16-142315-BR and has received Final Inspection. The current proposal does not include modification or alteration of the existing dock regarding increased overwater coverage or decreased setback. The permit is specific the location and installation of a ground-based boatlift and two (2) personal watercraft lifts.

Comment:
The site plan included in this application did not accurately depict the correct locations of the property lines and surrounding developments.

Response:
The applicant has submitted an updated site plan (Attachment 1) to this application to include as accurate of locations as possible. Access was not granted to the neighboring property to the south

to make accurate measurements of the dock to the south and were estimated to as close as possible using publicly available mapping information.

Comment:
The boatlift and personal watercraft lift might be located in the required setback.

Response:
The original proposal included three (3) personal watercraft lifts, one of which was located in the 12-foot setback. The proposal has since been revised to remove the third personal watercraft lift that was located within the 12-foot setback, and the two (2) remaining personal watercraft lifts are located on the north side of the dock, opposite of the setback as far as possible along the non-conforming section of the dock. The non-conformity of the existing dock is not being increased by the proposal. A Land Use inspection and survey verification for the ground-based boatlift is required prior to Clearing & Grading Permit final inspection to verify location of the boatlift and the two (2) dock-mounted watercraft lifts are in accordance with this proposal and the required 12-foot setback. **See Conditions of Approval in Section IX of this report.**

Comment:
The boatlift size proposed would require a boat navigating to it to approach too closely to my property to the property to the south.

Response:
The City's review of this proposal does not include the navigability of boats traversing public waters covering privately owned shorelands. The proposed boatlift location has been identified wholly within the surveyed shorelands and outside of the required setback of 12 feet specified in LUC 20.25E.080.N.1.b.vii.

Comment:
The proposed development may restrict development of my property to the south.

Response:
The City's review and approval of the proposal does not result in future development restrictions of adjacent properties. Any proposed development on the subject property or on any adjacent properties would be reviewed based on the applicable codes and standards at the time of application. The current proposal, as designed, meets the setback requirement of 12 feet specified in LUC 20.25E.080.N.1.b.vii, as well as the specific boatlift performance standards of LUC 20.25E.080.N.5 as reviewed in Section III of this report.

Comment:
The existing moorage piles waterward of the existing dock likely are a source of salmon predator habitat. These should be removed under this project.

Response:
The City's review of this Shoreline Substantial Development Permit for boat lift and water craft installation does not require the applicant to remove the existing pilings or structures as part of the performance standards or decision criteria for approval. The applicant was free to add this work to the scope of the permit for review but did not indicate any desire to remove these structures during the course of this review. The review conducted was specific to the Bellevue Land Use Code

requirements governing installation boat lifts and watercraft lifts as noted under Section III of this report.

V. Summary of Technical Reviews

Clearing and Grading:
The Clearing and Grading Division of the Development Services Department has reviewed the proposed development for compliance with Clearing and Grading codes and standards. The Clearing and Grading staff found no issues with the proposed development.

Utilities Department:
The Utilities Division of the Development Services Department has reviewed the proposed development for compliance with Utilities codes and standards. Utilities will require the public sewer main to be shown on all construction plans. These plans shall note that the sewer main is "as located by COB waste water crew" and the date that the location was done.

Utilities also restricts construction from occurring within 5' of the sewer main or within the easement on the site. All equipment, barges, and anchors must be kept away from the sewer main during construction. **See Conditions of Approval in Section IX of this report.**

VI. State Environmental Policy Act (SEPA)

The applicant has provided a complete SEPA checklist supported by detailed analysis for review in demonstrating no significant adverse environmental impact. Staff has reviewed the checklist, analysis, and supporting documentation and has determined that, for the proposed action, environmental review indicates no probability of significant adverse environmental impacts provided that applicable city codes and standards are implemented. Therefore, issuance of a Determination of Non-Significance pursuant to WAC 197-11-340 and Bellevue City Code (BCC) 22.02.034 is appropriate.

A. Noise

The site is adjacent to single-family residences whose residents are most sensitive to disturbance from noise during evening, late night and weekend hours when they are likely to be at home. Construction noise will be limited by the City's Noise Ordinance (Chapter 9.18 BCC) which regulates construction hours and noise levels. **See Conditions of Approval in Section IX of this report**

VII. Decision Criteria

A. Shoreline Substantial Development Permit Decision Criteria 20.30R

The Director of the Development Services Department may approve or approve with modifications if:

1. **The applicant has carried the burden of proof and produced evidence sufficient to support the conclusion that the application merits approval or approval with modifications; and**

   Finding: The applicant has carried the burden of proof and provided evidence sufficient to approve the project as discussed in Sections III, IV, and V of this report.

2. **The applicant has demonstrated that the proposal complies with the applicable decision criteria of the Bellevue City Code; and**

   Finding: As identified in Section III of this report the applicant has submitted project plans and documents that demonstrate the proposal's compliance with the applicable City of Bellevue Codes and Standards.

3. **The applicant has demonstrated that the proposal is consistent with the policies and procedures of the Shoreline Management Act and the provisions of Chapter 173-14 WAC and the Master Program.**

   Finding: The applicant's proposal is consistent with the following policies and has demonstrated compliance with the applicable procedures through this application. The subject proposal is compatible with existing and project land uses.

   Specifically the proposal is consistent with the following:

   RCW 90.58.020 Legislative findings-State policy enunciated-Use preference.

   WAC 173-26-176 General policy goals of the act and guidelines for shorelines of the state.

   City of Bellevue Comprehensive Plan POLICY SH-28. Increase and give high priority to a variety of recreational activities along the shoreline where appropriate and consistent with Environmental Element policies.

The proposed boatlift and watercraft lifts will provide two different recreational opportunities while meeting all relevant environmental policies, Shoreline requirements, and Critical Areas Ordinance requirements. The proposal is subject State and Federal permitting requirements, including but not limited allowed in-water work windows and mitigation as this permit does not supersede any other jurisdictional reviews required. **See Conditions of Approval in Section IX of this report.**

VIII. Conclusion and Decision

After conducting the various administrative reviews associated with this proposal, including LUC consistency, SEPA, City Code and Standard compliance reviews, the Director of the Development Services Department does hereby **approve with conditions** the location and installation of the proposed boatlift and two (2) personal watercraft lifts. Revision to this approval shall be in accordance with LUC 20.30R.190.

Note—Expiration of Approval: In accordance with LUC 20.30R.175, a Shoreline Substantial Development Permit automatically expires and is void if the applicant fails to file for a Building Permit and fails to make substantial progress towards completion of the project within two (2) years of the effective date of the Shoreline Substantial Development Permit unless the applicant has received an extension for the Shoreline Substantial Development Permit pursuant to LUC 20.30R.180.

IX. Conditions of Approval

The applicant shall comply with all applicable Bellevue City Codes and Ordinances including but not limited to:

Applicable Ordinances	Contact Person
Clearing and Grading Code- BCC 23.76	Janney Gwo, 425-452-6190
Utilities Code	Jason Felgar 425-452-7851
Land Use Code- BCC 20.25H	David Wong, 425-452-4282
Noise Control- BCC 9.18	David Wong, 425-452-4282

The following conditions are imposed under the BCC or SEPA authority referenced:

1. **State Permits Required:** Prior to the issuance of the required Clearing & Grading Permit, the applicant shall produce evidence of receipt of required state permits for the proposed boatlift and watercraft lifts.

   Authority: LUC 20.30R.155
   Reviewer: David Wong, Land Use

2. **Construction Stormwater Pollution Prevention Plan:** To ensure federal and state water quality and effluent standards are met, and Shoreline Overlay District comply with the provision of Chapter 23.76 BCC, a Construction Stormwater Pollution Prevention Plan is required to be submitted for review and approval as part of the Clearing & Grading Permit.

   Authority: BCC 23.76
   Reviewer: Janney Gwo, Clearing & Grading

3. **Lake Washington Allowed In-Water Work Windows:** To protect habitat associated with migrating anadromous fish within Lake Washington, the boatlift and personal watercraft lift installation approved by this permit shall only be allowed to occur between the following dates:
   July 16 – April 30
   Any deviation from this approved schedule must be approved in writing from the Washington Department of Fish and Wildlife.

   Authority: LUC 20.25H.160
   Reviewer: David Wong, Land Use

4. **Survey Verification:** Survey verification is required to be conducted to verify the ground-based boatlift is located at or outside of the required 12-foot structure setback.

   Authority: LUC 20.25E.080

Reviewer: David Wong, Land Use

5. **Noise Control:** Noise related to construction is exempt from the provisions of BCC 9.18 between the hours of 7 am to 6 pm Monday through Friday and 9 am to 6 pm on Saturdays, except for Federal holidays and as further defined by the BCC. Noise emanating from construction is prohibited on Sundays or legal holidays unless expanded hours of operation are specifically authorized in advance. Requests for construction hour extension must be done in advance with submittal of a construction noise expanded exempt hours permit.

   Authority: BCC 9.18
   Reviewer: David Wong, Land Use

6. **Sewer Main Location:** The public sewer main shall be shown on all demolition and construction plans. The plans shall note that the sewer main is "as located by COB waste water crew" and the date that the location was done.

   Authority: Sanitary Sewer Engineering Standards
   Reviewer: Jason Felgar, Utilities Department

7. **Setback from Sewer:** Construction is not permitted within 5' of the sewer main on the site. All equipment, barges, and anchors must be kept away from the sewer main during construction.

   Authority: Sanitary Sewer Engineering Standards
   Reviewer: Jason Felgar, Utilities

8. **Land Use Inspection:** To ensure the boatlift and personal watercraft lifts have been installed in accordance with approved plans (see Attachment A) the applicant must call for and obtain an inspection from a Land Use Planner from the City of Bellevue, following installation of approved improvements. This inspection is listed as a #600 land use inspection on the approved Clearing & Grading Permit.

   Authority: LUC 20.25E.080.B
   Reviewer: David Wong, Land Use

Ashley Shoreline Design & Permitting

16412 NE 10th Place
Bellevue, Washington 98008-3707
Phone: (425) 957-9381
greg@shoreline-permitting.com

DRAWING BY: Gregory W. Ashley
Proprietary Information. This drawing contains confidential and / or privileged information which is intended for use by specific licensed iondividuals only. Any copying, disclosure, or dissemination of this communication is prohibited. All Designs Copywrite 2019-
Ashley Shoreline Design & Permitting ********** www.shoreline-permitting.com

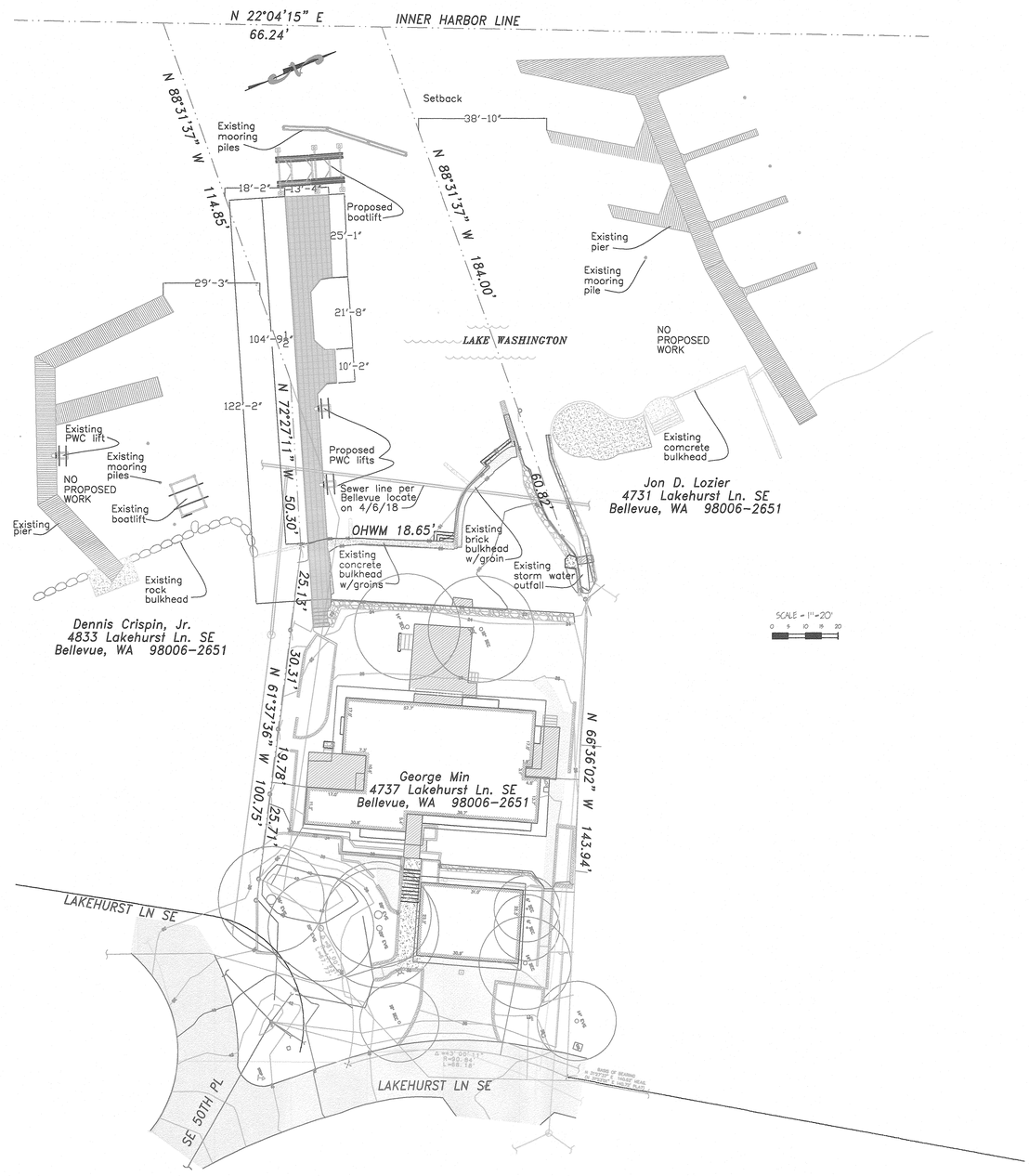

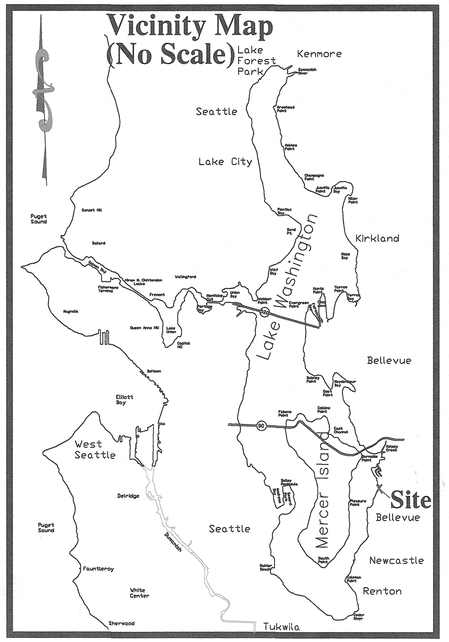

Received
MAR 2 2 2019
Permit Processing

SHORELINE PROJECT FOR : George Min 4743 Lakehurst Ln. SE Bellevue, WA 98006-2651 **PAGE:** 1 of 2	**LOCATION:** Lake Washington **DATUM:** NAVD 88 **LAT:** 47° 33' 36" North **LONG:** -122° 11' 27" West **LENGTH FROM OHWM:** N'A **SQ. FT. :** N/A	**PROJECT DESCRIPTION:** Install one freestanding boatlift, and two pier mounted PWC lifts. **DATE:** 4/5/2018 **REV:** 3/5/2019

Ashley Shoreline Design & Permitting

16412 NE 10th Place
Bellevue, Washington 98008-3707
Phone: (425) 957-9381
greg@shoreline-permitting.com

DRAWING BY: Gregory W. Ashley

Proprietary Information. This drawing contains confidential and / or privileged information which is intended for use by specific licensed iondividules only. Any copying, disclosure, or dissemination of this communication is prohibited. All Designs Copywrite 2019-
Ashley Shoreline Design & Permitting ********** *www.shoreline-permitting.com*

(TYP. ELEVATION)

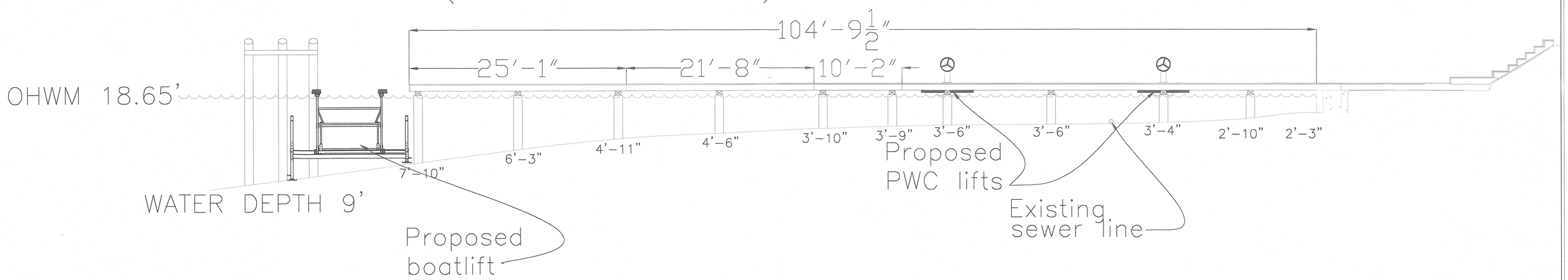

Received
MAR 2
Permit Processing

SHORELINE PROJECT FOR : George Min 4743 Lakehurst Ln. SE Bellevue, WA 98006-2651 **PAGE: 2 of 2**	**LOCATION:** Lake Washington **DATUM:** NAVD 88 **LAT:** 47° 33' 36" North **LONG:** -122° 11' 27" West **LENGTH FROM OHWM:** N'A **SQ. FT. :** N/A	**PROJECT DESCRIPTION:** Install one freestanding boatlift, and two pier mounted PWC lifts. **DATE:** 4/5/2018 **REV:** 3/5/2019