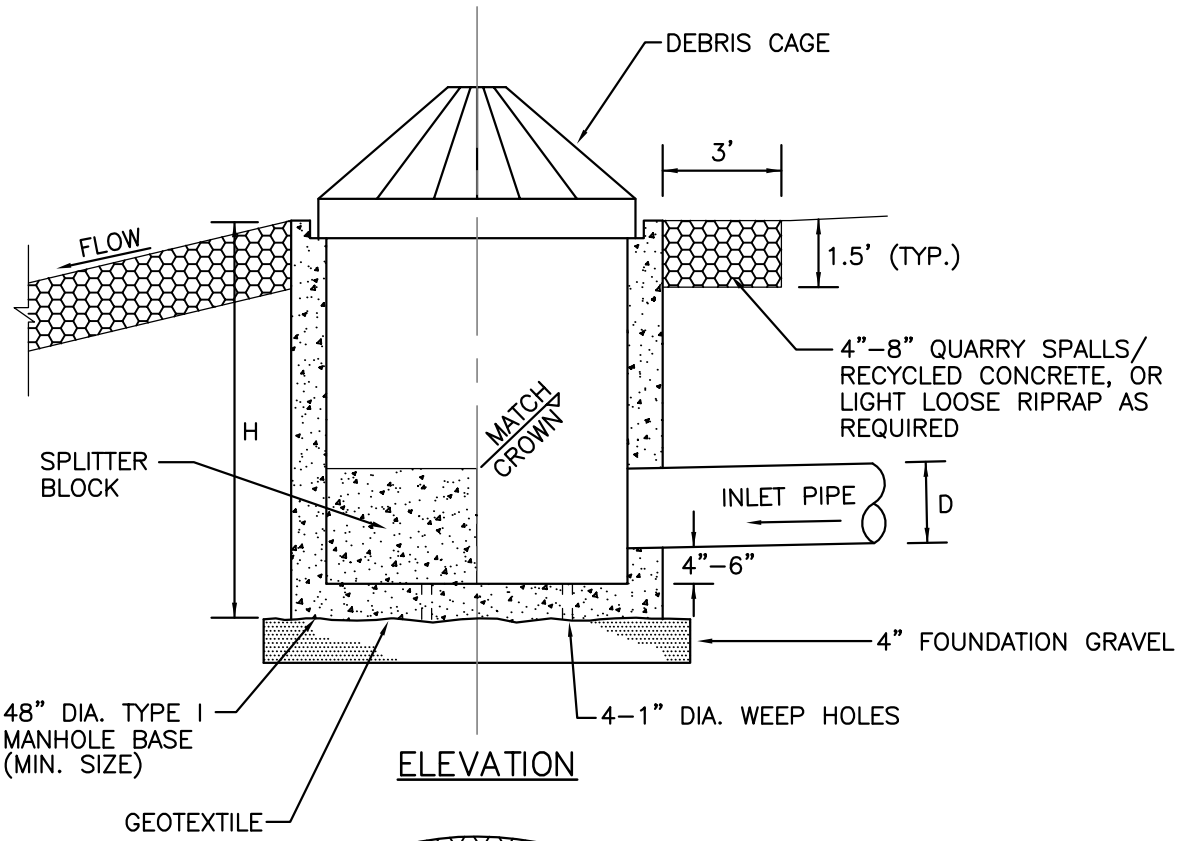

ELEVATION

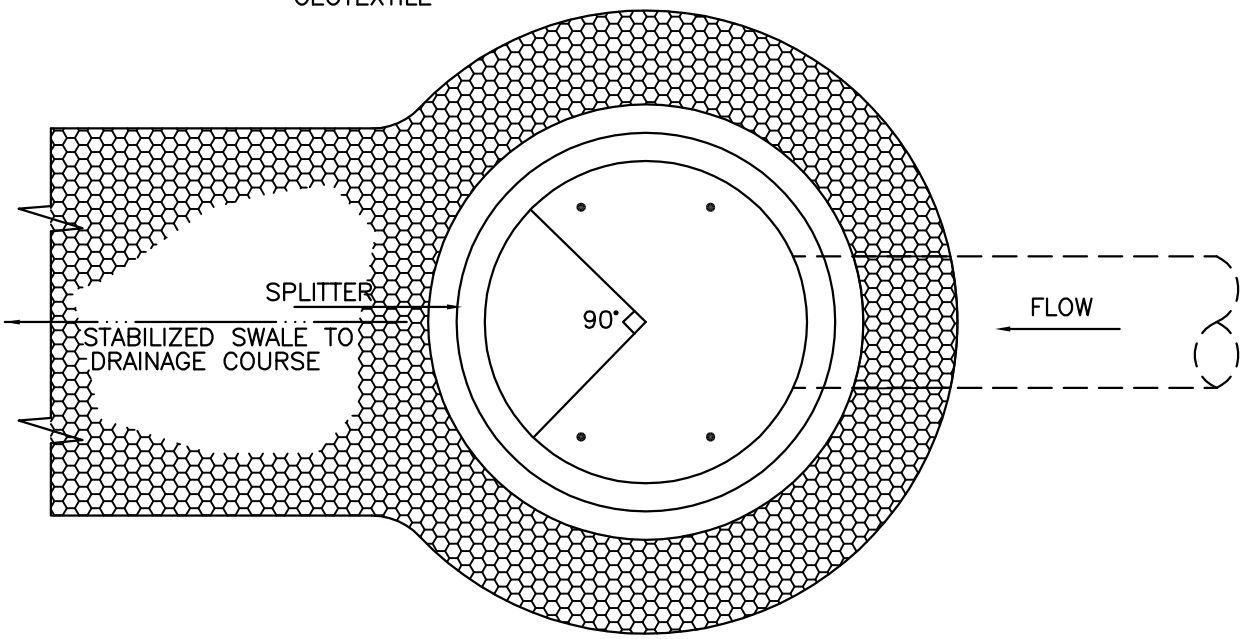

PLAN

INLET PIPE SIZE "D"	BASE HEIGHT "H"
8"	2'
12"	3'
18"	3'
24"	4'

City of Bellevue

STORM AND SURFACE WATER UTILITY

TITLE

ENERGY DISSIPATOR

JANUARY 2017

NO SCALE

NO. D–38