DEVELOPMENT SERVICES DEPARTMENT
ENVIRONMENTAL COORDINATOR
450 110th Ave NE., P.O. BOX 90012
BELLEVUE, WA 98009-9012

OPTIONAL DETERMINATION OF NON-SIGNIFICANCE (DNS) NOTICE MATERIALS

The attached materials are being sent to you pursuant to the requirements for the Optional DNS Process (WAC 197-11-355). A DNS on the attached proposal is likely. This may be the only opportunity to comment on environmental impacts of the proposal. Mitigation measures from standard codes will apply. Project review may require mitigation regardless of whether an EIS is prepared. A copy of the subsequent threshold determination for this proposal may be obtained upon request.

File No. 17-130487-WG

Project Name/Address: Lyons Pier Repair & Boat Lift / 3247 106th Ave SE

Planner: Drew Folsom

Phone Number: 425-452-4441

Minimum Comment Period: March 5, 2018

Materials included in this Notice:

- ☒ Blue Bulletin
- ☒ Checklist
- ☒ Vicinity Map
- ☒ Plans
- ☐ Other:

OTHERS TO RECEIVE THIS DOCUMENT:

- ☒ State Department of Fish and Wildlife / Sterwart.Reinbold@dfw.gov; Christa.Heller@dfw.wa.gov;
- ☒ State Department of Ecology, Shoreline Planner N.W. Region / Jobu461@ecy.wa.gov; sepaunit@ecy.wa.gov
- ☒ Army Corps of Engineers Susan.M.Powell@nws02.usace.army.mil
- ☒ Attorney General ecyolyef@atg.wa.gov
- ☒ Muckleshoot Indian Tribe Karen.Walter@muckleshoot.nsn.us; Fisheries.fileroom@muckleshoot.nsn.us

ENVIRONMENTAL CHECKLIST

If you need assistance in completing the checklist or have any questions regarding the environmental review process, please visit or call the Permit Center (425-452-6864) between 8 a.m. and 4 p.m., Monday through Friday (Wednesday, 10 to 4) Our TTY number is 425-452-4636.

Background Information

Property Owner: Clark R. Lyons

Proponent: Gregory W. Ashley - Ashley Shoreline Design & Permitting

Contact Person: Gregory W. Ashley - Ashley Shoreline Design & Permitting
(If different from the owner. All questions and correspondence will be directed to the individual listed.)

Address: 16412 NE 10th Pl.
Bellevue, WA 98008-3707
Phone: (425) 957-9381

Proposal Title: Lyons pier and boatlifts

Proposed Location: 3247 106th Ave. SE
(Street address and nearest cross street or intersection) Provide a legal description if available.

Please attach an 8 ½" x 11" vicinity map that accurately locates the proposed site.

Give an accurate, brief description of the proposal's scope and nature.

General description: Repair existing 707 SF pier. Repair piles as needed by sleeving with HDPE pipe and filling with concrete. Repair caps and stringers. Replace solid wood-plank decking with Titan grated decking. Intermediate stringers will be added to support the new grated decking. The existing 8'-6" wide boat slip will be widened by 1'-6" to 10' to accommodate boat moorage. Total overwater coverage will be reduced by 36 SF to 671 SF. All dimensional lumber will be cut to size on shore and assembled over water. A freestanding portable boatlift will be installed in the slip as well as a pier mounted PWC lift. All activities take place in Lake Washington.

1. Acreage of site: 33,316 SF
2. Number of dwelling units/buildings to be demolished: None, does not apply
3. Number of dwelling units/buildings to be constructed: None, does not apply
4. Square footage of buildings to be demolished: None, does not apply
5. Square footage of buildings to be constructed: None, does not apply
6. Quantity of earth movement (in cubic yards): None, does not apply
7. Proposed land use: Private single-family residence
8. Design features, including building height, number of stories and proposed exterior materials: Does not apply
9. Other: Does not apply

Received
DEC 11 2017
Permit Proce...

Estimated date of completion of the proposed timing of phasing: July 16 through December 31

Do you have any plans for future additions, expansions, or further activity related or connected with this proposal? If yes, explain. No

List any environmental information you know about that has been prepared, or will be prepared, directly related to this proposal. None known

Do you know whether applications are pending for government approvals of other proposals directly affecting the property covered by your proposal? If yes, explain. List dates applied for and file numbers, if known? No

Please provide one or more of the following exhibits, if applicable to your proposal.
(Please check appropriate box(es) for exhibits submitted with your proposal)

☐ Land Use Reclassification (rezone) Map of existing and proposed zoning.

☐ Preliminary Plat or Planned Unit Development
Preliminary plat map

☐ Clearing & Grading Permit
Plan of existing and proposed grading
Development plans

☐ Building Permit (or Design Review)
Site Plan
Clearing & Grading Plan

☑ Shoreline Management Permit
Site Plan

A - ENVIRONMENTAL ELEMENTS

1. EARTH

a. General description of the site (circle one): flat; rolling; hilly; steep slopes; mountainous; other: _____

b. What is the steepest slope on the site (approximately percent slope)? < 1%

c. What general types of soils are found on the site (for example, clay, sand gravel, peat, muck)? If you know the classification of agricultural soils, specify them and note any prime farmland.
Sand & gravel

d. Are there surface indicators or history of unstable soils in the immediate vicinity? If so, describe.
No

e. Describe the purpose, type, and approximate quantities of any filling or grading proposed. Indicate source of fill.
None, does not apply.

f. Could erosion occur as a result of clearing, construction, or use? If so, generally describe.
No

g. About what percent of the site will be covered with impervious surfaces after project construction (for example, asphalt or buildings)?

2/1/18

None, does not apply

h. Proposed measures to reduce or control erosion, or other impacts to the earth, if any:
None

2. AIR

a. What types of emissions to the air would result from the proposal (i.e., dust, automobile, odors, industrial wood smoke) during construction and when the project is completed? If any, generally describe and give approximate quantities if known.
None, does not apply

b. Are there any off-site sources of emissions or odor that may affect your proposal? If so, generally describe.
No, does not apply

c. Proposed measures to reduce or control emissions or other impacts to air, if any:
None, does not apply

3. WATER

a. Surface

1) Is there any surface water body on or in the immediate vicinity of the site (including year-round and seasonal streams, saltwater, lakes, ponds, wetlands)? If yes, describe type and provide names. If appropriate, state what stream or river it flows into.
Yes, Lake Washington

2) Will the project require any work over, in, or adjacent to (within 200 feet) the described waters? If yes, please describe and attach available plans.
Yes. Repair existing 707 SF pier. Repair piles as needed by sleeving with HDPE pipe and filling with concrete. Repair caps and stringers. Replace solid wood-plank decking with Titan grated decking. Intermediate stringers will be added to support the new grated decking. The existing 8'-6" wide boat slip will be widened by 1'-6" to 10' to accommodate boat moorage. Total overwater coverage will be reduced by 36 SF to 671 SF. All dimensional lumber will be cut to size on shore and assembled over water. A freestanding portable boatlift will be installed in the slip as well as a pier mounted PWC lift. All activities take place in Lake Washington.

3) Estimate the amount of fill and dredge material that would be placed in or removed from surface water or wetlands and indicate the area of the site that would be affected. Indicate the source of fill material.
None, does not apply

4) Will the proposal required surface water withdrawals or diversions? Give general description, purpose and approximate quantities if known.
No, does not apply

5) Does the proposal lie within a 100-year flood plain? If so, note location on the site plan.
No

6) Does the proposal involve any discharges of waste materials to surface waters? If so, describe the type of waste and anticipated volume of discharge.
No, does not apply

b. Ground

1) Will ground water be withdrawn, or will water be discharged to ground water? Give general description, purpose, and approximately quantities if known.
No, does not apply

DS 7/1/18

2) Describe waste material that will be discharged into the ground from septic tanks or other sources, if any (for example: domestic sewage; industrial, containing the following chemicals, agriculture; etc.).
None, does not apply

3) Describe the general size of the system, the number of such systems, the number of houses to be served (if applicable), or the number of animals or humans the system(s) are expected to serve.
None, does not apply

c. **Water Runoff** (including storm water)

1) Describe the source of runoff (including storm water) and method of collection and disposal, if any (include quantities, if known). Where will this water flow? Will this water flow? Will this water flow into other waters? If so, describe.
None, does not apply

2) Could waste materials enter ground or surface waters? If so, generally describe.
No, does not apply

d. Proposed measures to reduce or control surface, ground, and runoff water impacts, if any:
None, does not apply

4. PLANTS

a. Check the types of vegetation found on the site:

☑ **Deciduous tree:** Alder, Maple, Aspen, other

☐ **Evergreen tree:** Fir, Cedar, Pine, other

☑ Shrubs
☑ Grass
☐ Pasture
☐ Crop or grain

☐ **Wet soil plants:** Cattail, Buttercup, Bulrush, Skunk Cabbage, other

☐ **Water plants:** Water Lily, Eelgrass, Milfoil, other

☐ Other types of vegetation

b. What kind and amount of vegetation will be removed or altered?
None, does not apply

c. List threatened or endangered species known to be on or near the site.
Salmon

d. Proposed landscaping, use of native plants, or other measures to preserve or enhance vegetation on the site, if any:
None

5. ANIMALS

a. Check or circle any birds and animals which have been observed on or near the site or are known to be on or near the site:

DL 7/1/0

☑ **Birds:** Hawk, Heron, Eagle, Songbirds, other:

☐ **Mammals:** Deer, Bear, Elk, Beaver, other:

☑ **Fish:** Bass, Salmon, Trout, Herring, Shellfish, other:

b. List any threatened or endangered species known to be on or near the site.
Salmon

c. Is the site part of a migration route? If so, explain
Possibly a Salmon outmigration rout

d. Proposed measures to preserve or enhance wildlife, if any:
Adhere to all regulations and guidelines

6. ENERGY AND NATURAL RESOURCES

a. What kinds of energy (electric, natural gas, oil, wood stove, solar) will be used to meet the completed project's energy needs? Describe whether it will be used for heating, manufacturing, etc.
None, does not apply

b. Would your project affect the potential use of solar energy by adjacent properties? If so, generally describe.
No, does not apply

c. What kinds of energy conservation features are included in the plans of this proposal? List other proposed measures to reduce or control energy impacts, if any:
None, does not apply

7. ENVIRONMENTAL HEALTH

a. Are there any environmental health hazards, including exposure to toxic chemicals, risk of fire and explosion, spill, or hazardous waste, that could occur as a result of this proposal? If so, describe.
No

1) Describe special emergency services that might be required.
None, does not apply

2) Proposed measures to reduce or control environmental health hazards, if any:
None, does not apply

b. Noise

1) What type of noise exist in the area which may affect your project (for example: traffic, equipment, operation, other)?
None, does not apply

2) What types and levels of noise would be created by or associated with the project on a short-term or a long-term basis (for example: traffic, construction, operation, other)? Indicate what hours noise would come from the site.
Construction, Monday through Friday, 8:00 A.M. to 4:30 P.M.

3) Proposed measures to reduce or control noise impacts, if any:
Limit time of construction to M-F, 8:00 A.M to 4:30 P.M.

NOISE FURTHER MITIGATED PER BCC 9.18 "NOISE CONTROL"

8. LAND USE AND SHORELINE USE

2/6/18

a. What is the current use of the site and adjacent properties?
Private single-family residence

b. Has the site been used for agriculture? If so, describe.
No

c. Describe any structures on the site.
Private single-family residence

d. Will any structures be demolished? If so, what?
No

e. What is the current zoning designation of the site?
R-3.5

f. What is the current comprehensive plan designation of the site?

g. If applicable, what is the current Shoreline Master Program designation of the site (check with City Planning staff)?

h. Has any part of the site been classified an "environmentally sensitive" area? If so, specify.
Yes, the shoreline

i. Approximately how many people would reside or work in the completed project?
None, does not apply

j. Approximately how many people would the completed project displace?
None, does not apply

k. Proposed measures to avoid or reduce displacement impacts, if any?
None, does not apply

l. Proposed measures to ensure the proposal is compatible with existing and projected land uses and plans, if any:
Adhere to all regulations and guidelines

9. HOUSING

a. Approximately how many units would be provided, if any? Indicate whether high, middle, or low-income housing.
None, does not apply

b. Approximately how may units, if any, would be eliminated? Indicate whether high-, middle-, or low-income housing.
None, does not apply

c. Proposed measures to reduce or control housing impacts, if any:
None, does not apply

10. AESTHETICS

a. What is the tallest height of any proposed structures(s), not including antenna; what is the principal exterior building material(s) proposed?

7/1/18

Less than three (3) feet above OHWM. Wood

b. What views in the immediate vicinity would be altered or obstructed?
None

c. Proposed measures to reduce or control aesthetic impacts, if any:
None

11. LIGHT AND GLARE

a. What type of light or glare will the proposal produce? What time of day would it mainly occur?
None, does not apply

b. Could light or glare from the finished project be a safety hazard or interfere with views?
No, does not apply

c. What existing off-site sources of light or glare may affect your proposal?
None, does not apply

d. Proposed measures to reduce or control light and glare impacts, if any:
None, does not apply

12. RECREATION

a. What designated and informal recreational opportunities are in the immediate vicinity?
Water sports

b. Would the proposed project displace any existing recreational uses? If so, describe.
No

c. Proposed measures to reduce or control impacts on recreation, including recreation opportunities to be provided by the project of applicant, if any:
None

13. HISTORICAL AND CULTURAL PRESERVATION

a. Are there any places or objects listed on, or proposed for, national, state, or local preservation registers known to be on or next to the site? If so, generally describe.
None known

b. Generally describe any landmarks or evidence of historic, archaeological, scientific, or cultural importance known to be on or next to the site.
None known

c. Proposed measures to reduce or control impacts, if any:
None

14. TRANSPORTATION

a. Identify public streets and highways serving the site, and describe proposed access to the existing street system. Show on-site plans, if any.
Does not apply

b. Is site currently served by public transit? If not, what is the approximate distance to the nearest transit stop?
Does not apply

DJ 7/1/18

c. How many parking spaces would the completed project have? How many would the project eliminate?
None, does not apply

d. Will the proposal require any new roads or streets, or improvements to existing roads or streets, not including driveways? If so, generally describe (indicate whether public or private).
No, does not apply

e. Will the project use (or occur in the immediate vicinity of) water, rail, or air transportation? If so, generally describe.
No, does not apply

f. How many vehicular trips per day would be generated by the completed project? If known, indicate when peak volumes would occur.
None, does not apply

g. Proposed measures to reduce or control transportation impacts, if any:
None, does not apply

15. PUBLIC SERVICES

a. Would the project result in an increased need for public services (for example: fire protection, police protection, health care, schools, other)? If so, generally describe.
No, does not apply

b. Proposed measures to reduce or control direct impacts on public services, if any.
None, does not apply

16. UTILITIES

a. Circle utilities currently available at the site: electricity, natural gas, water, refuse service, telephone, sanitary sewer, septic system, other.
Does not apply

b. Describe the utilities that are proposed for the project, the utility providing the service, and the general construction activities on the site or in the immediate vicinity, which might be needed.
None, does not apply

SIGNATURE

The above answers are true and complete to the best of my knowledge. I understand that the lead agency is relying on them to make its decision.

Signature: _____

Date Submitted: 12/11/2012

DF 2/6/13

Vicinity Map

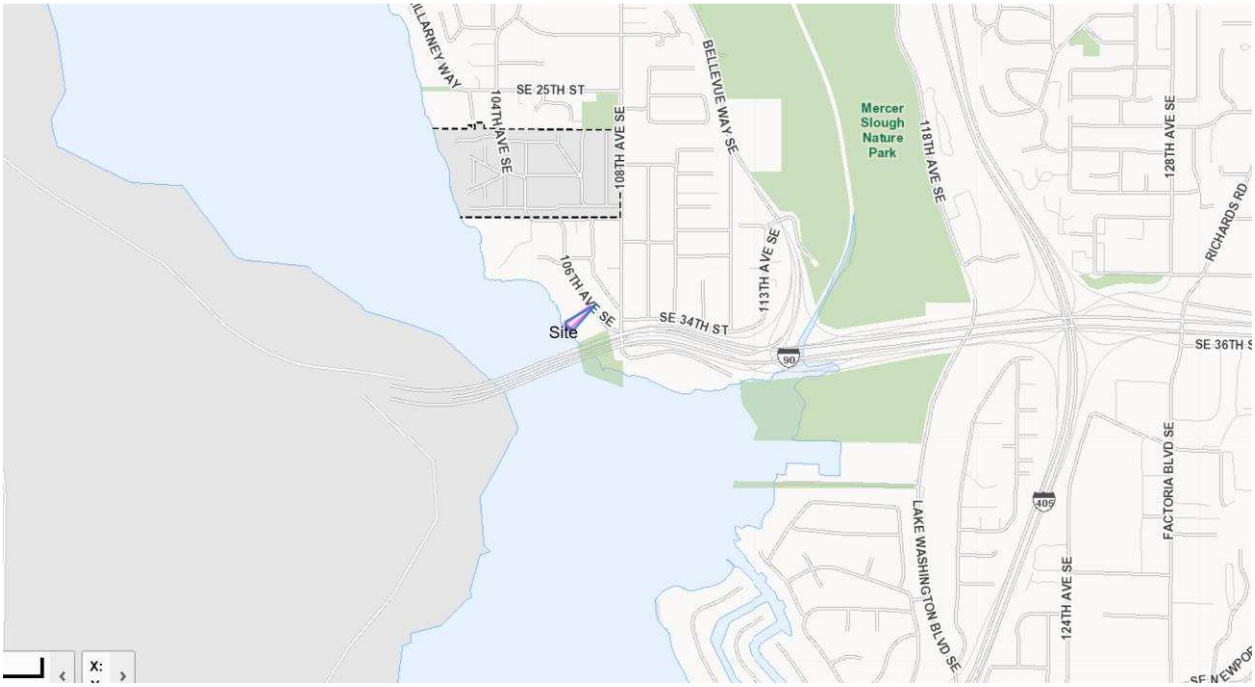

Ashley Shoreline Design & Permitting

16412 NE 10th Place
Bellevue, Washington 98008-3707
Phone: (425) 957-9381
Fax: (425) 746-8252
greg@shoreline-permitting.com

DRAWING BY: Gregory W. Ashley

Proprietary Information. This drawing contains confidential and / or privileged information which is intended for use by specific licensed iondividuals only. Any copying, disclosure, or dissemination of this communication is prohibited. All Designs Copywrite 2017-
Ashley Shoreline Design & Permitting ********** *www.shoreline-permitting.com*

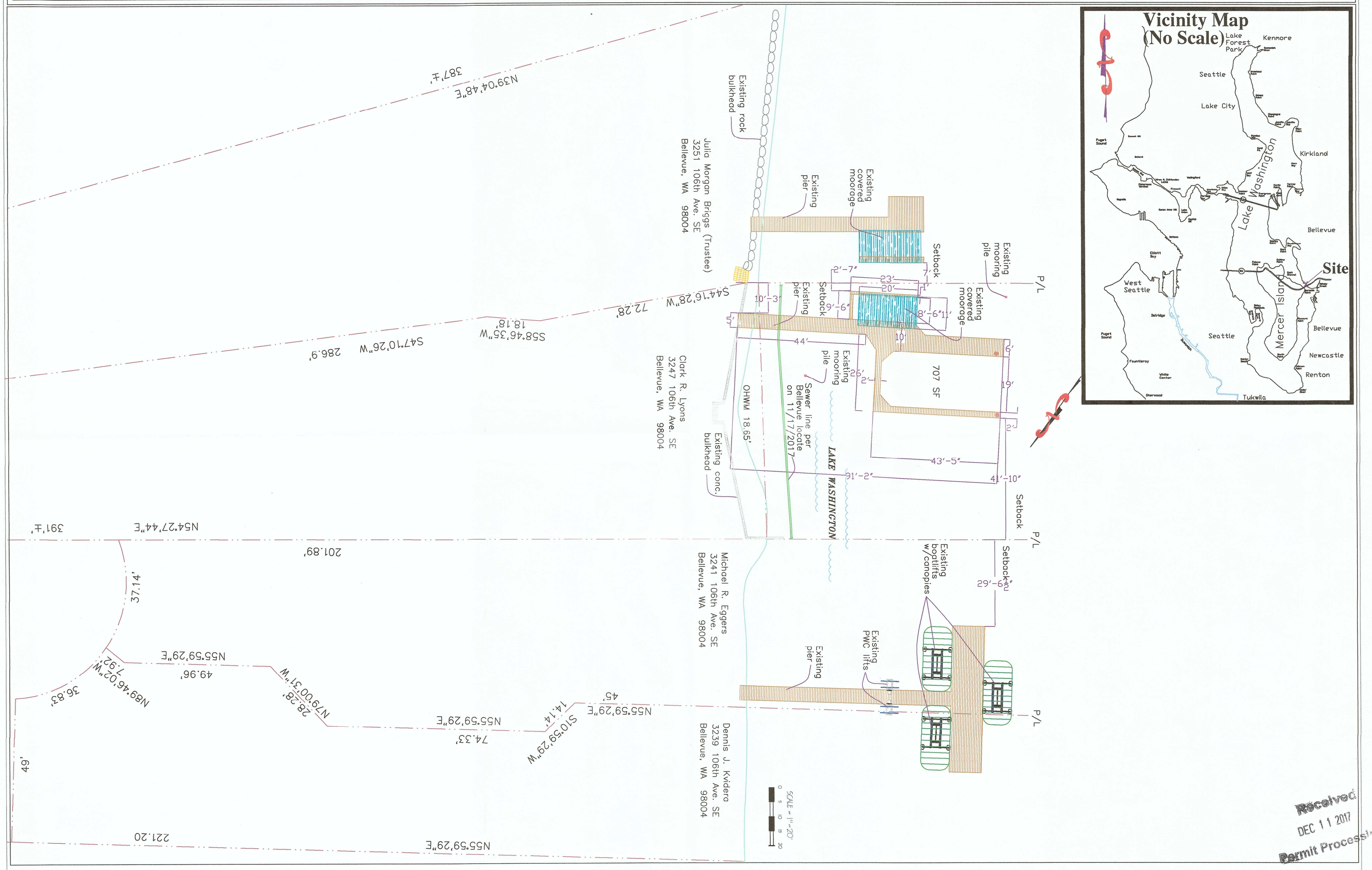

Received
DEC 11 2017
Permit Processing

SHORELINE PROJECT FOR : Clark R. Lyons, 3247 106th Ave. SE, Bellevue, WA 98004 **PAGE: 1 of 3**	**LOCATION:** Lake Washington **LAT:** 47° 34' 48" North **LONG:** -122° 11'57" West **LENGTH FROM OHWM:** 91'-2" **DATUM: NAVD 88** **SQ. FT. :** ~~633~~ 671 SMC	**PROJECT DESCRIPTION:** Repair caps & stringers. Repair piles as needed by sleeving with HDPE pipe and filling with concrete. Replace decking with Titan grated decking. Widen slip to 10'. Install boatlifts. **DATE: 6/1/2017**

Ashley Shoreline Design & Permitting

16412 NE 10th Place
Bellevue, Washington 98008-3707
Phone: (425) 957-9381
Fax: (425) 746-8252
greg@shoreline-permitting.com

DRAWING BY: Gregory W. Ashley

Proprietary Information. This drawing contains confidential and / or privileged information which is intended for use by specific licensed iondividuals only. Any copying, disclosure, or dissemination of this communication is prohibited. All Designs Copywrite 2017-
Ashley Shoreline Design & Permitting ********** *www.shoreline-permitting.com*

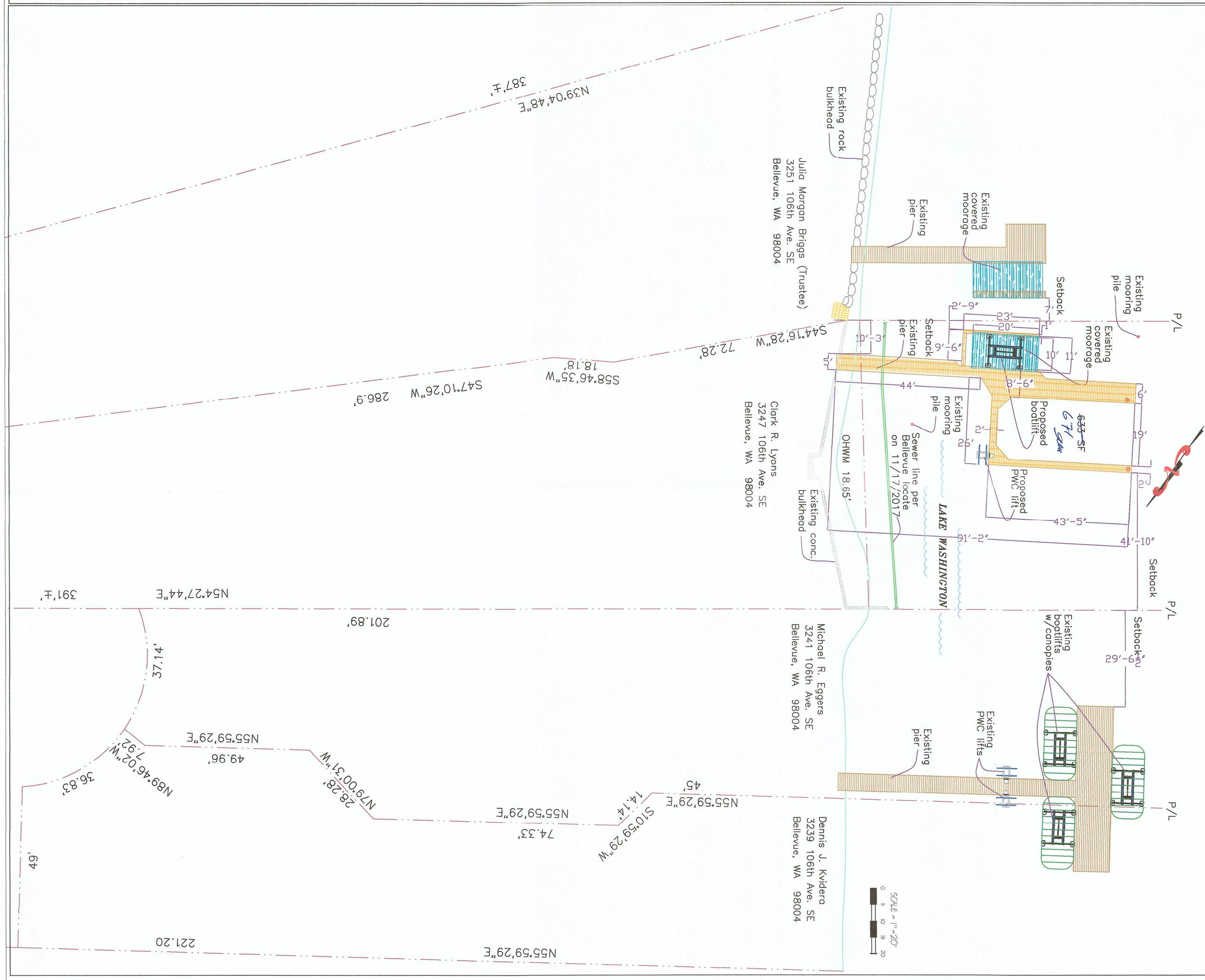

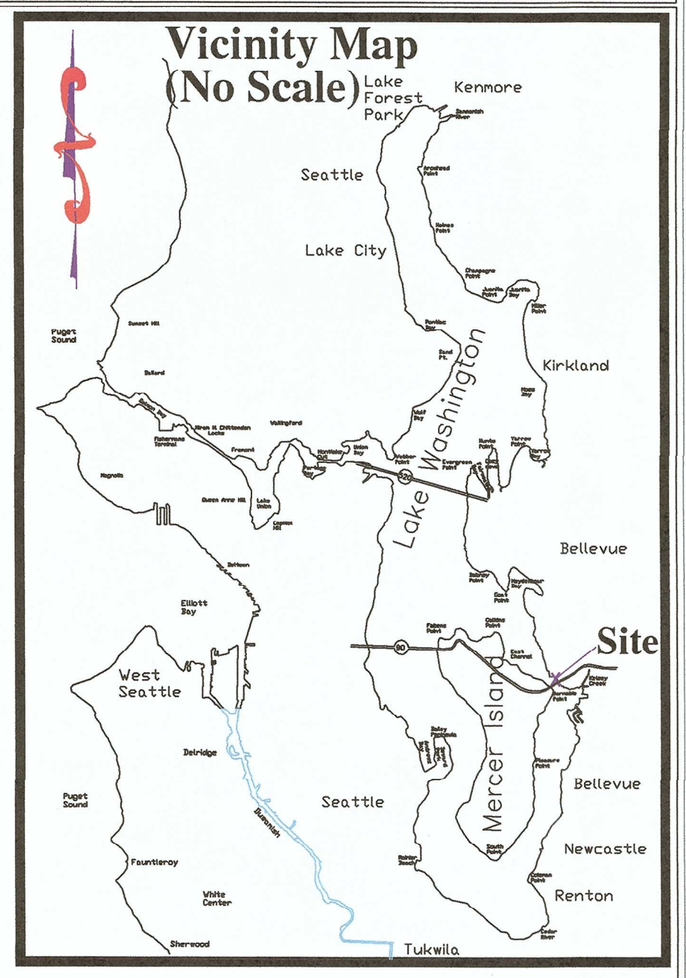

Received
DEC 11 2017
Permit Processing

SHORELINE PROJECT FOR : Clark R. Lyons, 3247 106th Ave. SE, Bellevue, WA 98004	**LOCATION:** Lake Washington **LAT:** 47° 34' 48" North **LONG:** -122° 11'57" West **LENGTH FROM OHWM:** 91'-2"	**DATUM:** NAVD 88
PAGE: 2 of 3		**SQ. FT. :** ~~633~~ 671

PROJECT DESCRIPTION: Repair caps & stringers. Repair piles as needed by sleeving with HDPE pipe and filling with concrete. Replace decking with Titan grated decking. Widen slip to 10'. Install boatlifts.

DATE: 6/1/2017

Ashley Shoreline Design & Permitting

16412 NE 10th Place
Bellevue, Washington 98008-3707
Phone: (425) 957-9381
Fax: (425) 746-8252
greg@shoreline-permitting.com

DRAWING BY: Gregory W. Ashley

Proprietary Information. This drawing contains confidential and / or privileged information which is intended for use by specific licensed iondividules only. Any copying, disclosure, or dissemination of this communication is prohibited. All Designs Copywrite 2017-
Ashley Shoreline Design & Permitting ********** *www.shoreline-permitting.com*

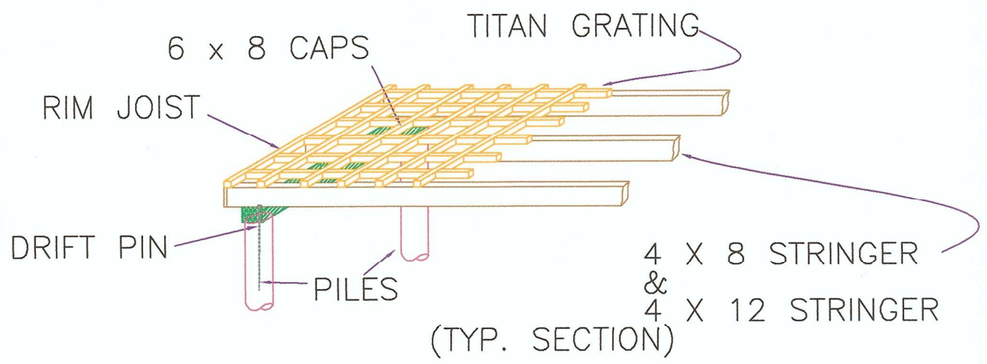

(TYP. ELEVATION)

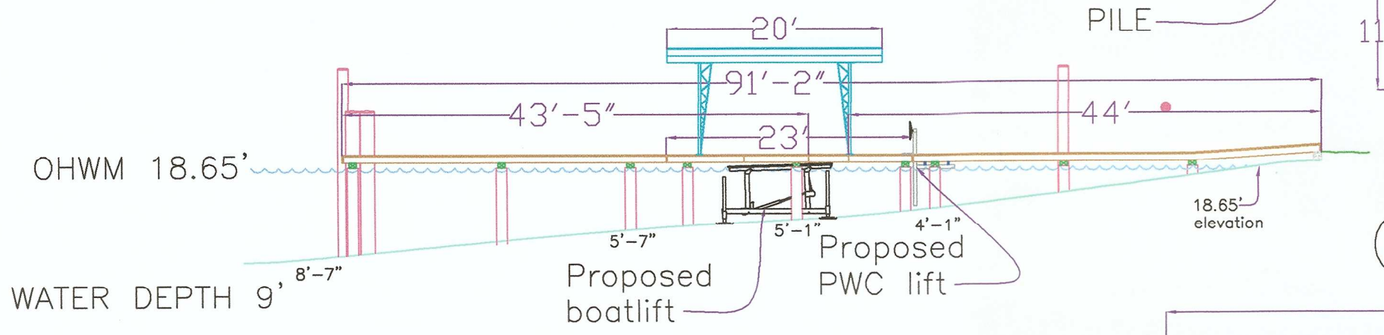

(EXISTING TYP. DETAIL)

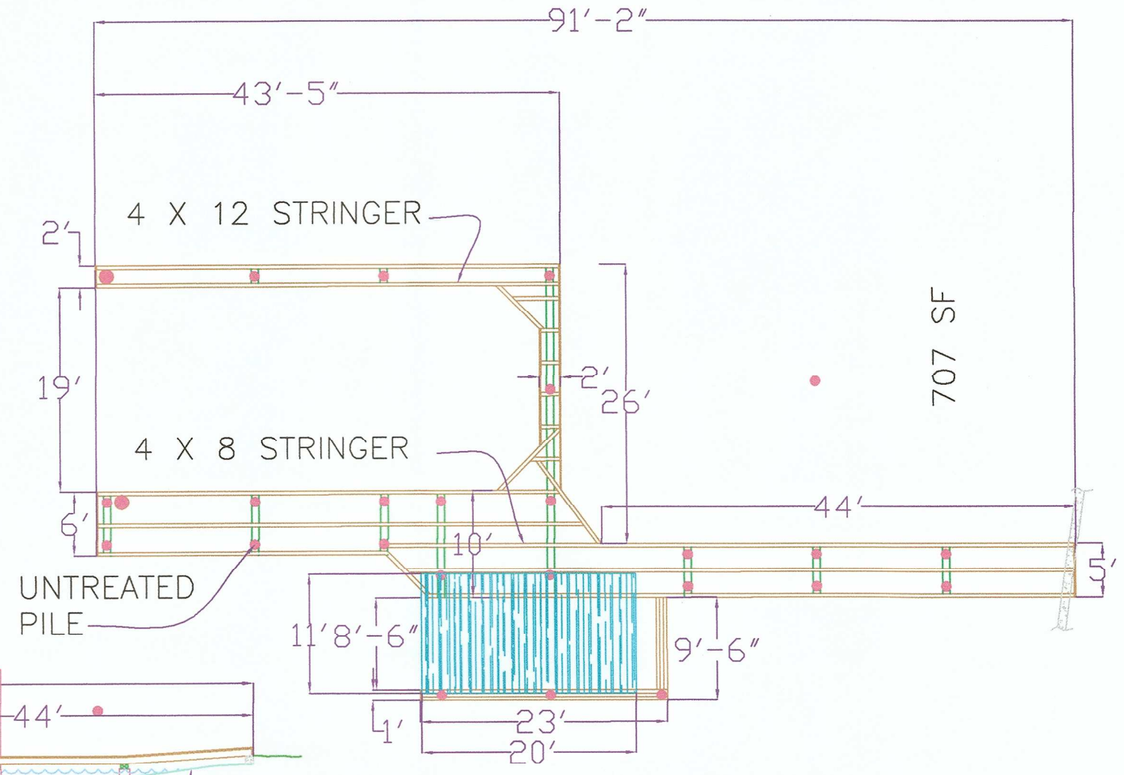

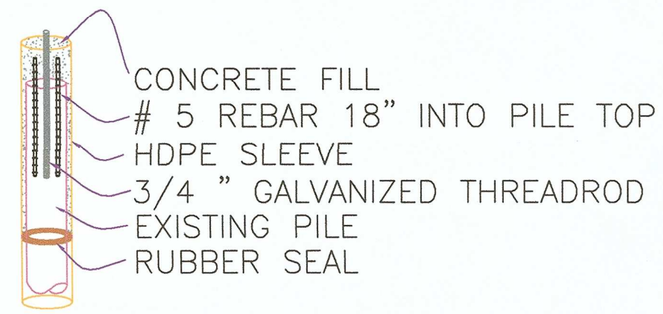

IF PILE REPAIR IS NEEDED:
SLIDE HDPE SLEEVE OVER PILE TO LAKE BOTTOM
SEAL BOTTOM OF SLEEVE WITH RUBBER GASKET
FILL SLEEVE WITH CONCRETE

(PROPOSED TYP. DETAIL)

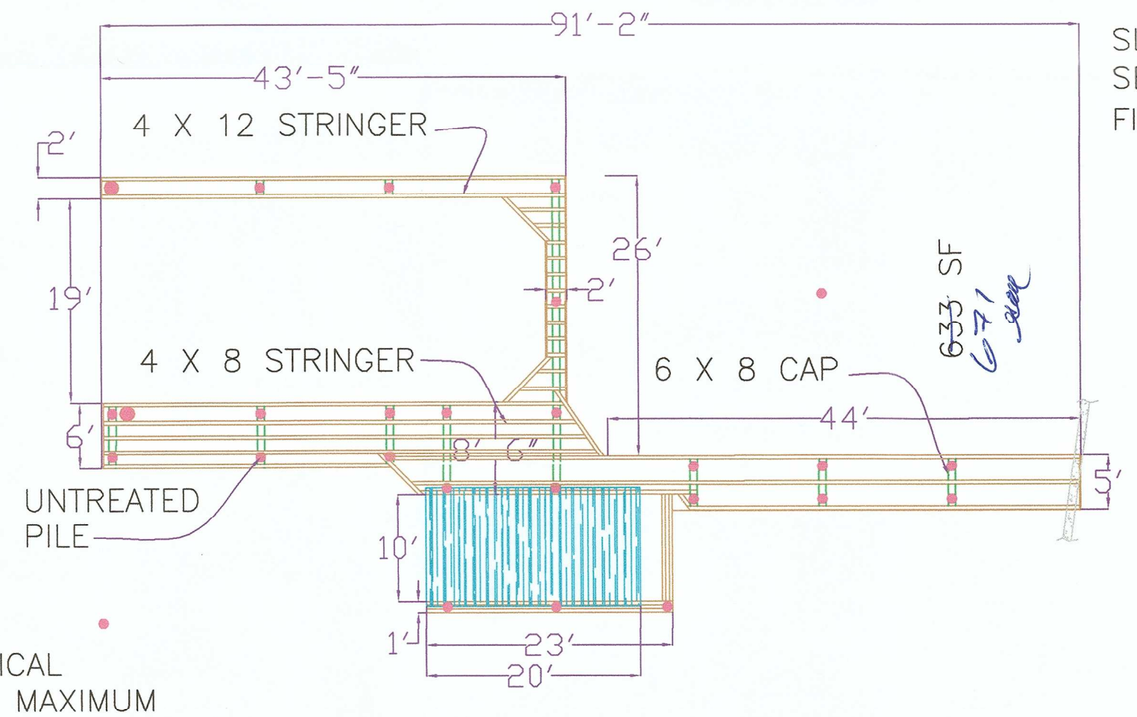

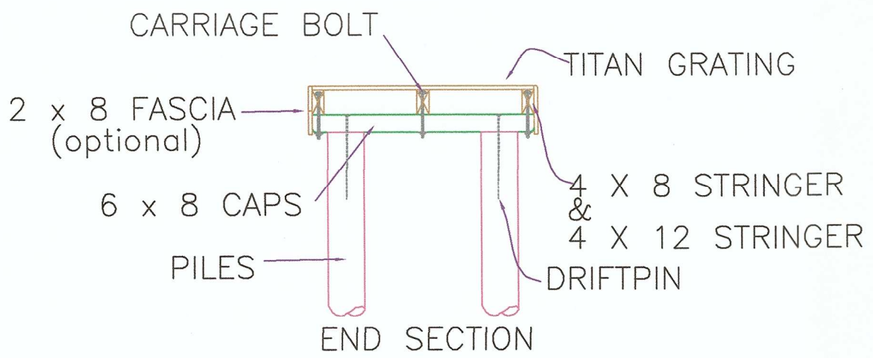

1. ALL PILINGS ARE EXISTING.
2. PILINGS ARE 12" DIA. TYPICAL
3. PILE BENTS ARE 15 FEET MAXIMUM
4. CAPS ATTACHED TO PILINGS WITH 30" X 1/2" GALV. DRIFT PINS
5. INSTALL INTERMEDIATE STRINGERS TO SUPPORT GRATED DECKING
6. STRINGERS TO BE MAXIMUM 2' O.C.
7. STRINGERS TO BE ATTACHED TO CAPS WITH 14" X 1/2" GALV. CARRIAGE BOLTS
8. DECKING ATTACHED TO STRINGERS WITH #10 3" SS SCREWS

NOTES:
ALL PILINGS ARE NON-TREATED DOUGLAS FIR
CAP MATERIAL TO BE DOUGLAS FIR # 2 OR BETTER -- ACZA TREATED TO .60 OR REFUSAL
STRINGER MATERIAL TO BE DOUGLAS FIR # 2 OR BETTER -- ACZA TREATED TO .40 OR REFUSAL
DECKING TO BE TITAN GRATING

Received
DEC 11 2017
Permit Processing

SHORELINE PROJECT FOR : Clark R. Lyons 3247 106th Ave. SE Bellevue, WA 98004 **PAGE:** 3 of 3	**LOCATION:** Lake Washington **LAT:** 47° 34' 48" North **LONG:** -122° 11'57" West **LENGTH FROM OHWM:** 91'-2"	**DATUM:** NAVD 88 **SQ. FT. :** ~~633~~ 671	**PROJECT DESCRIPTION:** Repair caps & stringers. Repair piles as needed by sleeving with HDPE pipe and filling with concrete. Replace decking with Titan grated decking. Widen slip to 10'. Install boatlifts. **DATE:** 6/1/2017