City of Bellevue
Development Services Department
Land Use Staff Report

Proposal Name:	124th Ave NE – NE Spring Blvd to Northup Way – COBT
Proposal Address:	124th Avenue NE from NE Spring Blvd to Northup Way
Proposal Description:	A City of Bellevue Transportation Department proposal to widen 124th Avenue NE to five lanes from NE Spring Blvd to Northup Way. Project includes a multi-purpose pathway, sidewalk, landscaping, replacement of the West Tributary culvert, wetland mitigation, and associated improvements.
File Number:	15-118691-LO
Applicant:	Marina Arakelyan, City of Bellevue Transportation
Decisions Included	Critical Areas Land Use Permit (Process II. 20.30P)
Planner:	Reilly Pittman, Land Use Planner
State Environmental Policy Act Threshold Determination:	**Determination of Non-Significance issued previously on September 18, 2014**
Director's Decision:	**Approval with Conditions** Michael A. Brennan, Director Development Services Department By: _____ Carol V. Helland, Land Use Director

Application Date:	July 17, 2015
Notice of Application Date:	July 30, 2015
Decision Publication Date:	January 28, 2016
Project Appeal Deadline:	February 11, 2016

For information on how to appeal a proposal, visit Development Services Center at City Hall or call (425) 452-6800. Appeal of the decision must be received in the City's Clerk's Office by 5 PM on the date noted for appeal of the decision.

CONTENTS

I. Proposal Description ..... Pg 3

II. Site Description, Zoning & Land Use Context ..... Pg 3-5

III. Consistency with Land Use Code Requirements ..... Pg 5-10

IV. Public Notice & Comment ..... Pg 10-11

V. Summary of Technical Review ..... Pg 11

VI. State Environmental Policy Act (SEPA) ..... Pg 11

VII. Changes to Proposal Due to Staff Review ..... Pg 12

VIII. Decision Criteria ..... Pg 12

IX. Conclusion and Decision ..... Pg 13

X. Conditions of Approval ..... Pg 13-14

Attachments

1. Project Plans – Enclosed
2. Culvert Plans – Enclosed
3. Mitigation Plans, Combined Mitigation Plan – Enclosed
4. Critical Areas Assessment, Wetland Typing – In File
5. Geotech Report – In File
6. Public Comment Communications with Muckleshoot, Project forms, SEPA checklist – In File

I. Proposal Description

The City of Bellevue Transportation Department proposes to widen 124th Avenue NE to five lanes, including a multi-purpose pathway, sidewalks, bike lanes, landscaping from NE Spring Boulevard to Northup Way. Replacement of the culvert under 124th Avenue NE that carries the West Tributary of Kelsey Creek is proposed as part of the project in order to make the culvert fish-passable. A cross section of the road is below.

Figure 1

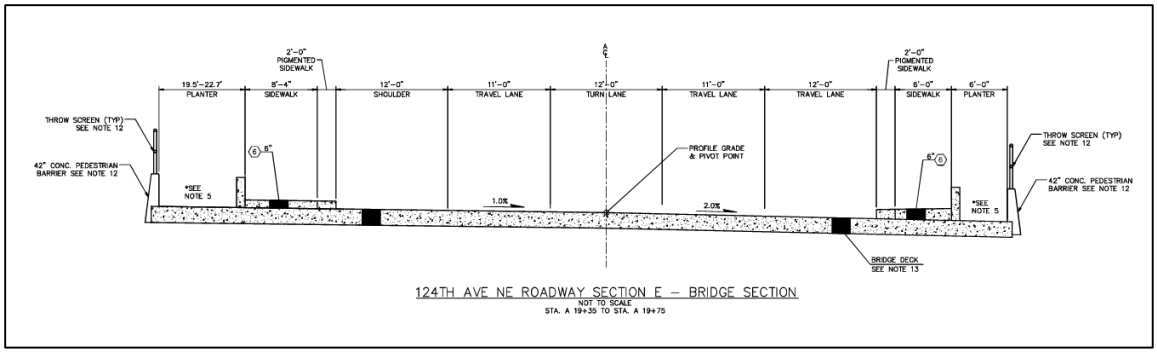

Temporary and permanent impacts from the project to steep slopes, stream and wetland buffers respectively will result from this proposal. Construction of this project is proposed in phases, with the first phase ending just south of the stream culvert under 124th Avenue NE at Ichigo Way. Construction of the next phase from Ichigo Way to Northup Way is contingent upon funding and coordination with future construction proposals at Northup Way. However, review of this proposal includes all impacts to critical areas, the culvert replacement to be fish-passable and any necessary mitigation and restoration. New or expanded public rights of way are an allowed use in critical areas provided there is no other feasible alternative demonstrated. Impacts are proposed to wetland buffers and some removal of steep slopes is proposed. See attachment 1 for project plans.

II. Site Description, Zoning, Land Use and Critical Areas

A. Site Description

The focus of this application is 124th Avenue NE, from NE Spring Boulevard to Northup Way. The West Tributary of Kelsey Creek crosses under 124th Avenue in an existing culvert. Wetlands 1, A, and B/C are found adjacent to the stream channel and are category II, IV, and III respectively. The properties adjacent to the project area are predominantly commercially zoned and are historically industrial uses with most of the site covered in impervious surfaces. The West Tributary regional stormwater facility is adjacent to 124th Avenue, east of the road. See Figure 2 below for project location.

Figure 2

B. Zoning

The properties in vicinity of the public right of way are zoned:

- BR-OR and OR-1, Bel-Red Office/Residential, Node 1
- BR-R, Bel-Red Residential

C. Land Use Context

The properties in vicinity have predominantly commercial and residential Land Use

Designations.

D. Critical Areas On-Site and Regulations

i. Streams and Riparian Areas

Streams are classified into four types, based on their flow and capacity to support fish and fish habitat. Artificial channels (e.g., ditches) are generally not protected, unless they are used by salmonids or convey a stream that previously occurred naturally in that location.

Stream needs healthy riparian areas along its banks and floodplain. Riparian vegetation provides shade, which protects water quality; retains soil, which prevents erosion that can affect salmon spawning and feeding areas; holds back flood flows; and provides wildlife habitat and the large woody debris that stores sediments, slows flood velocities, and creates good fish habitat.

ii. Wetlands

Wetlands include the vegetated edges of ponds and areas commonly called swamps, marshes, and bogs. Frequently, their water is only visible in the spring. Wetlands are classified into four categories, based on a combination of habitat, water quality, and flood-flow-reduction functions.

Wetlands provide rearing and foraging habitats for fish and wildlife and food chain support for downstream waters. Wetlands provide natural water quality improvement; flood-flow reduction and storage; shoreline erosion protection; and opportunities for passive recreation. Many urban wetlands are heavily disturbed, but still provide valuable water quality treatment and flood-flow reduction.

iii. Geologic Hazard Areas

Geologic hazards pose a threat to the health and safety of citizens when commercial, residential, or industrial development is inappropriately sited in areas of significant hazard. Some geologic hazards can be reduced or mitigated by engineering, design, or modified construction practices. When technology cannot reduce risks to acceptable levels, building in geologically hazardous areas is best avoided (WAC 365-190).

Steep slopes may serve several other functions and possess other values for the City and its residents. Several of Bellevue's remaining large blocks of forest are located in steep slope areas, providing habitat for a variety of wildlife species and important linkages between habitat areas in the City. These steep slope areas also act as conduits for groundwater, which drains from hillsides to provide a water source for the City's wetlands and stream systems. Vegetated steep slopes also provide a visual amenity in the City, providing a "green" backdrop for urbanized areas enhancing property values and buffering urban development.

III. Consistency with Land Use Code Requirements:

A. Zoning District Dimensional Requirements:

All work is within the City-owned right-of-way and the zoning requirements of the Land Use

Code do not apply. The only structure proposed is a new stream culvert under the road.

B. Critical Areas Requirements LUC 20.25H:

The City of Bellevue Land Use Code Critical Areas Overlay District (LUC 20.25H) establishes performance standards and procedures that apply to development on any site which contains in whole or in part any portion designated as critical area, critical area buffer or structure setback from a critical area or buffer. The proposed improvements are allowed uses in critical areas, buffers, and setbacks, provided certain requirements are met. The project is subject to the performance standards found in LUC 20.25H.055.C below.

i. Consistency With LUC 20.25H.055.C.2.a

New or expanded facilities and systems are allowed within the critical area or critical area buffer only where no technically feasible alternative with less impact on the critical area or critical area buffer exists. A determination of technically feasible alternatives will consider:

1. The location of existing infrastructure;

The proposal is within the City's right-of-way and is improving an existing road. There is no opportunity to locate these improvements elsewhere that avoids wetland buffers as wetlands are located on both sides of the road currently. The impact of the steep slope is proposed to avoid further impacting the wetlands.

2. The function or objective of the proposed new or expanded facility or system;

The proposal is one of the road improvements necessary to fulfill the City's long term vision and plans for the Bel-Red subarea. The plan calls for the conversion of an historical industrial area to commercial, office, and residential uses, improvement of all modes of transportation as well as remediation of historical environmental impacts and degradation. This road project provides five lanes with a multipurpose pathway. Due to the road widening proposed, part of this proposal is the replacement of the existing culvert which carries the West Tributary of Kelsey Creek under 124th Avenue NE in order to make the culvert fish-passable per the plans and details found as Attachment 2. The proposed culvert is 10 feet tall, 20 feet wide, and 142 feet long and will result in daylighting a portion of the creek. The culvert will be installed to match the existing slope of the upstream channel. Engineered stream bed material will be placed within the culvert with a depth varying from 2.5 to 5 feet thick. The replaced culvert will be designed to facilitate fish passage once barriers are removed downstream. This culvert was also reviewed under the prior SEPA review in application 14-130765-LM which contained culvert designs found on Attachment 2. The future culvert will require approval of a Hydraulic Permit Approval (HPA) from the Washington Department of Fish and Wildlife. The culvert will be required to meet any requirements or conditions of the HPA permit. **See Section X for a related condition of approval.**

3. Demonstration that no alternative location or configuration outside of the critical area or critical area buffer achieves the stated function or objective,

including construction of new or expanded facilities or systems outside of the critical area;

Given the City's right-of-way in this location has wetlands on both sides of the road there is no alternative location or configuration that would avoid intrusions proposed by the project. The extent of impact can be limited. The project makes use of solider pile walls to limit the extent of the developed right-of-way into the wetland buffer and avoid placement of fill slopes in the buffer. The project also avoids permanent impacts to wetlands and only impacts the buffers by placing the proposed road in the highly disturbed steep slope west of 124th Avenue NE. By impacting the steep slope the wetland is avoided more than if the slope was retained. Only temporary impacts to the stream are proposed which result from culvert replacement. Permanent impacts to wetland buffers are proposed which result from widening of the paved area to include new lanes, sidewalks, and multi-use paths and bike lanes. See Figure 3 below for a detail of the wall along wetland 1, east of 124th Avenue NE. See Attachment 1 for project plans showing the walls and road proposed.

Figure 3

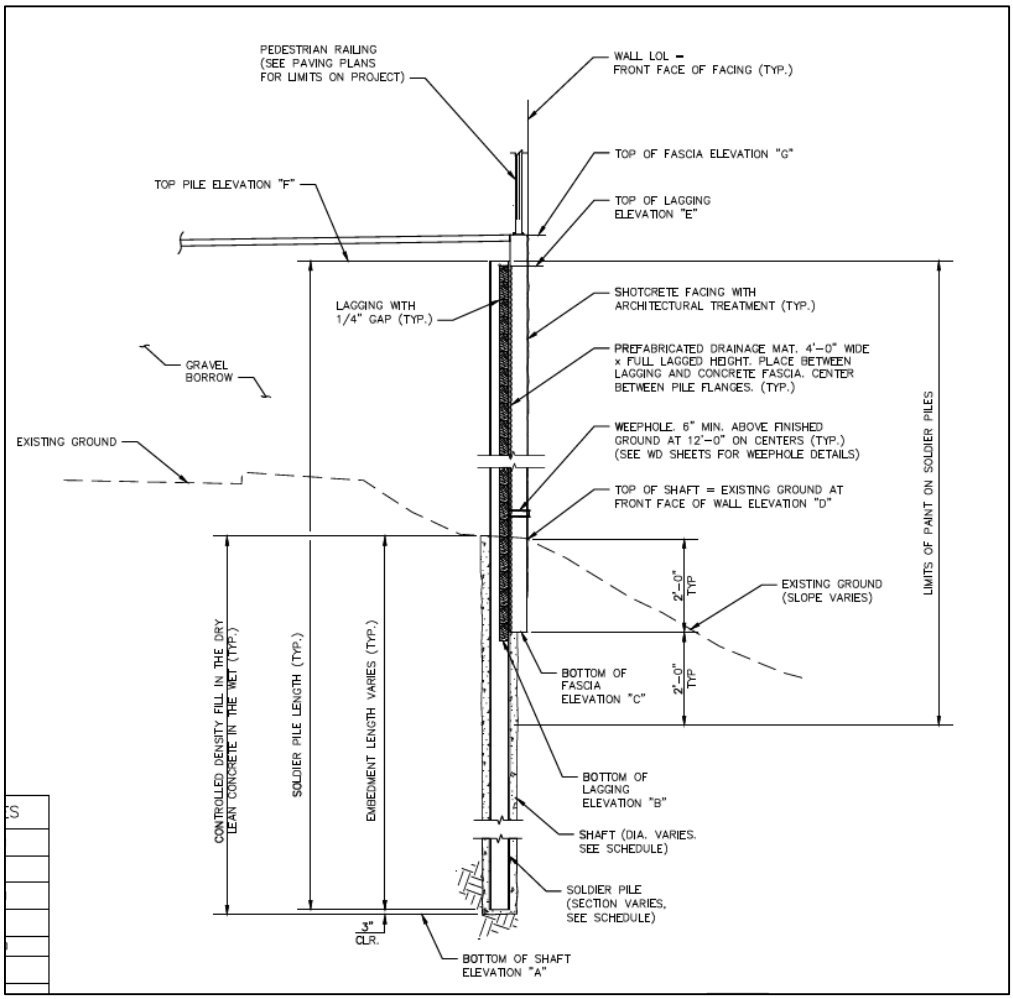

4. **Whether the cost of avoiding disturbance is substantially disproportionate as compared to the environmental impact of proposed disturbance; and**
The steep slope critical area is highly impacted by historical clearing. The wetland buffer is impacted and not "high functioning" as it has been disturbed by mowing and indirect road impacts such as noise and light spillover (Critical Areas Study). The use of retaining walls rather than fill slopes increases project cost but avoids impacting the actual wetlands, keeping the impacts within the outer wetland buffer. The project is required to replace the stream culvert which is a high cost but will allow the culvert to be fish-passable and improve aquatic habitat by daylighting more of the stream that is currently in the culvert. The costs associated with the construction allow environmental impacts to be avoided, reduced or improved in the case of the culvert. Impacts cannot be avoided since the road has wetlands on both sides. Avoiding impacts would result in reduction of the roadway width and would not meet the vision for the Bel-Red area which includes modes of transit beyond cars. Narrowing the road would also remove the requirement to replace the culvert. The cost of avoidance is greater than the impacts proposed and the improvement of the stream culvert.

5. **The ability of both permanent and temporary disturbance to be mitigated.**
As identified in the submitted wetland studies there are ample opportunities to mitigate the buffer impacts. A total of .28 acres of permanent buffer impact is proposed that will be mitigated by planting and enhancing .28 acres of buffer of wetland 1 that is east of the road in the West Tributary stormwater facility. See Figure 4 below for wetland impacts and Attachment 4 for wetland typing. See Attachment 3 for mitigation plan areas which are broken into two separate areas, one along 124th Avenue NE and the second at the far eastern boundary of the wetland. This plan also includes conceptual restoration plans for restoration of temporary disturbance caused by the culvert replacement. A revision to the mitigation plan was created in order to show all proposed mitigation and restoration associated with the 124th Avenue NE construction and the restoration of Wetland 1 proposed by the Utilities Department under a separate application.

Figure 4

Table 7. Summary of Wetland Buffer Impacts in the 124th Avenue NE Study Area

Wetland	Affected Vegetation	Area of Impact[a]
		Acres
1	Dominated by big-leaf maple, red alder, and Himalayan blackberry	0.22
A	Dominated by mowed grasses in the row, Himalayan blackberry, red alder and big-leaf maple	0.04
B/C	Dominated by mowed grasses in the row, Himalayan blackberry on the interior of the site	0.02
Total		**0.28**

This plan also includes conceptual restoration plans for restoration of temporary disturbance caused by the culvert replacement. The culvert will be installed to match the existing slope of the upstream channel. Engineered stream bed material will be placed within the culvert with a depth varying from 2.5 to 5 feet thick. **See Section X for a related condition of approval.**

Approximately .42 acres of steep slope are being impacted on the west side of 124th Avenue NE in order to avoid the wetland buffers and wetlands as much as possible. However the plans show the impact but do not show any mitigation for this impact which effectively removes the steep slope. Some mitigation is needed for the impact of the steep slope. The future mitigation plans submitted with the construction permits are required to provide mitigation for the impacted slope. **See Section X for a related condition of approval.**

This project is proposed adjacent to another City Utility Department project which proposes to conduct wetland restoration within wetland 1. The Utility project is entirely separate but construction may potentially coincide with the mitigation planting in the wetland buffer of wetland 1. As shown in Attachment 3, the planting in the buffer is located on the east side of 124th Avenue NE and the east portion of the wetland, in the buffer. Also shown on the plan is future restoration of areas temporarily disturbed by construction of the West Tributary culvert under 124th Avenue NE. Construction of the culvert and road section from the culvert to Northup Way is contingent on funding and future project plans along Northup Way. The future permits for construction of the road must depict all proposed mitigation, restoration and provide full details on all planting specifications. **See Section X for a related condition of approval.**

ii. Consistency with LUC 20.25H.055.C.2.b

If the applicant demonstrates that no technically feasible alternative with less impact on the critical area or critical area buffer exists, then the applicant shall comply with the following:

1. **Location and design shall result in the least impacts on the critical area or critical area buffer;**
2. **Disturbance of the critical area and critical area buffer, including disturbance of vegetation and soils, shall be minimized;**
3. **Disturbance shall not occur in habitat used for salmonid rearing or spawning or by any species of local importance unless no other technically feasible location exists;**
4. **Any crossing over of a wetland or stream shall be designed to minimize critical area and critical area buffer coverage and critical area and critical area buffer disturbance, for example by use of bridge, boring, or open cut and perpendicular crossings, and shall be the minimum width necessary to accommodate the intended function or objective; provided, that the Director may require that the facility be designed to accommodate additional facilities where the likelihood of additional facilities exists, and one consolidated**

corridor would result in fewer impacts to the critical area or critical area buffer than multiple intrusions into the critical area or critical area buffer;

5. **All work shall be consistent with applicable City of Bellevue codes and standards;**
6. **The facility or system shall not have a significant adverse impact on overall aquatic area flow peaks, duration or volume or flood storage capacity, or hydroperiod;**
7. **Associated parking and other support functions, including, for example, mechanical equipment and maintenance sheds, must be located outside critical area or critical area buffer except where no feasible alternative exists; and**
8. **Areas of new permanent disturbance and all areas of temporary disturbance shall be mitigated and/or restored pursuant to a mitigation and restoration plan meeting the requirements of LUC 20.25H.210.**

The design of the project results in the least impact by aligning the project as far from the wetland critical areas and critical areas buffers as possible within the existing street right-of-way limits. The use of retaining walls limits the intrusion of the right-of-way by avoiding the use of fill slopes. The placement of the roadway in the steep slopes also avoids the wetlands and buffers. The design of the project minimizes impacts to vegetated critical areas buffers by locating new sidewalks within roadway shoulders that do not have woody vegetation growing under existing conditions. The project will improve the culvert and make it fish-passable. All project work will be consistent with applicable City of Bellevue codes and standards. The project does not include any parking or other support functions within critical areas or critical areas buffers. All areas of new permanent disturbance and temporary disturbance within critical areas or critical areas buffers will be mitigated pursuant to the mitigation included in this report meeting requirements of Bellevue LUC 20.23H.210.

iii. Consistency With LUC 20.25H.080 and LUC 20.25H.100

New lighting will be directed away from the West Tributary. Other than noise potentially created by additional vehicles, the only increase in noise levels would result from construction. Runoff from impervious surfaces will be treated prior to release to any wetland or stream. The outer edge of the wetland buffer adjacent to the West Tributary will be planted with dense vegetation to limit pet or human per the submitted mitigation plan. Use of pesticides, insecticides, and fertilizers within 150 feet of the edge of buffers adjacent to the West Tributary will be in accordance with the City of Bellevue's Environmental Best Management Practices.

IV. Public Notice and Comment

Application Date:	July 17, 2015
Public Notice (500 feet):	July 30, 2015
Minimum Comment Period:	August 13, 2015

The Notice of Application for this project was published in the City of Bellevue Weekly Permit

Bulletin and Seattle Times on July 30, 2015. It was mailed to property owners within 500 feet of the project site. Comments were received from Karen Walter with the Muckleshoot Indian Tribe regarding the removal of King County controlled flow structures that limit fish use of the West Tributary and how the culvert replacement proposed would improve this situation. The applicant has responded that the proposed improvement of 124th Avenue NE does not impact or change the flow structures which are on King County property and not within the public right-of-way. The county may remove these structures in the future as part of redevelopment and at that time the culvert proposed for replacement will not limit fish access. Another comment concerned design of the proposed culvert and ensuring rock bands in the stream bed are sufficiently covered so as to not become future barriers to fish. The applicant's engineer has responded that the rock bands are meant to maintain the stream bed gradient and that voids will be filled and covered with finer streambed sediments but the 2013 WDFW Water Crossing Guidelines do not state that coarse rock bands must be covered with material. The engineer stated that this description if found in the construction specs and not on the plans. The future construction plans for the culvert will need to address the coverage of the rock bands and the plans will need to meet WDFW requirements for fish passable culverts. See Figure 5 below for a depiction of the culvert and rock bands and Attachment 6 for communication on the comments. **See Section X for a related condition of approval.**

Figure 5

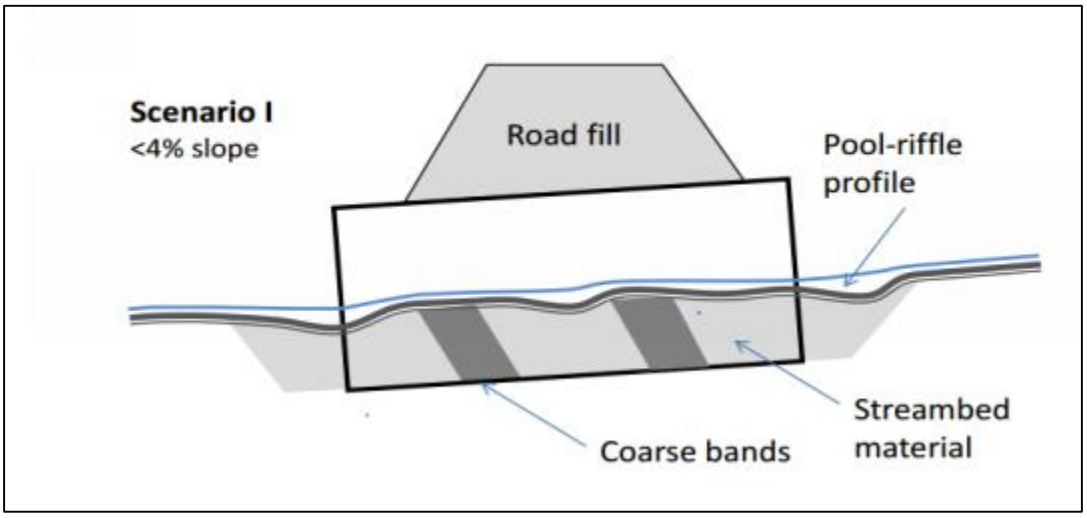

V. Summary of Technical Reviews

A. Clearing and Grading

The Clearing and Grading Division of the Development Services Department has reviewed the proposed site development for compliance with Clearing and Grading codes and standards. The Clearing and Grading staff found no issues with the proposed development and has approved the application.

VI. State Environmental Policy Act (SEPA)

A SEPA Determination of Non-Significance was issued for the entire 124th Avenue project under prior application 14-130765-LM on September 18, 2014. The project received a final Categorical Exclusion under NEPA on October 5, 2015.

VII. Changes to Proposal Due to Staff Review

Staff requested changes and coordination between Utilities and Transportation Departments to ensure mitigation planting for the 124th Avenue project did not conflict with wetland restoration and habitat improvement of the wetlands adjacent to the West Tributary within the stormwater facility. The applicant was also required to respond to the public comments received.

VIII. Decision Criteria

A. 20.30P.140 Critical Area Land Use Permit Decision Criteria – Decision Criteria

The Director may approve, or approve with modifications an application for a Critical Area Land Use Permit if:

1. **The proposal obtains all other permits required by the Land Use Code.**
   All required permits will be obtained.

2. **The proposal utilizes to the maximum extent possible the best available construction, design and development techniques which result in the least impact on the critical area and critical area buffer.**
   The project locates the improvements within the existing right-of-way and limits permanent disturbance as much as possible to have the least impact on wetlands and wetland buffers. Use of walls to avoid fill slopes and the placement of the right-of-way in the steep slope avoids the wetland and buffers as much as can be done considering the linear nature of the project and that the road has wetlands on both sides. The project will also be replacing the existing culvert to make it fish-passable and ready to facilitate fish use one downstream blockages are removed.

3. **The proposal incorporates the performance standards of Part 20.25H to the maximum extent applicable.**
   As discussed in Section III of this report, the applicable performance standards of LUC Section 20.25H are being met.

4. **The proposal will be served by adequate public facilities including street, fire protection, and utilities.**
   The proposed improvements enhance a public facility by providing new capacity and non-motorized transportation options.

5. **The proposal includes a mitigation or restoration plan consistent with the requirements of LUC Section 20.25H.210.**
   The mitigation planting plan is found in Attachment 3 and mitigates the project impacts by improving a .28 acre area of wetland buffer. As conditioned, the mitigation provided must also address the .42 acre area of impacted steep slopes.

6. **The proposal complies with other applicable requirements of this code.**
   As discussed in this report, the proposal complies with all other applicable requirements of the Land Use Code.

IX. Conclusion and Decision

After conducting the various administrative reviews associated with this proposal, including Land Use Code consistency, City Code and Standard compliance reviews, the Director of the Development Services Department does hereby **approve with conditions** the disturbance and modification of critical areas for the proposed improvement of 124th Avenue from NE Spring Boulevard to Northup Way. **Approval of this Critical Areas Land Use Permit does not constitute a permit for construction. Separate development permits are required and all plans are subject to review for compliance with applicable City of Bellevue codes and standards.**

Note- Expiration of Approval: In accordance with LUC 20.30P.150 a Critical Areas Land Use Permit automatically expires and is void if the applicant fails to file for a building permit or other necessary development permits within one year of the effective date of the approval unless additional time is granted by the approval. As previously discussed, the construction of the culvert and portion of 124th Avenue from the culvert to Northup Way is contingent upon funding and coordination with potential transportation projects on Northup Way. Per LUC 20.30P.150.B, this approval is granted a three-year expiration. If the City's critical area ordinance is updated in this period this approval may expire if the regulations change substantially or any additional mitigation is required by the new regulations. No extension beyond the three-year expiration can be granted.

X. Conditions of Approval

The applicant shall comply with all applicable Bellevue City Codes and Ordinances including but not limited to:

Applicable Ordinances	Contact Person
Clearing and Grading Code- BCC 23.76	Janney Gwo, 425-452-6190
Land Use Code- BCC Title 20	Reilly Pittman, 425-452-4350
Noise Control- BCC 9.18	Reilly Pittman, 425-452-2973

The following conditions are imposed under the Bellevue City Code or SEPA authority referenced:

1. **Development Permit:** Approval of this Critical Areas Land Use Permit does not constitute an approval of a development permit. Application for a clearing and grading or other required permits must be submitted and approved. Plans submitted as part of either permit application shall be consistent with the activity permitted under this approval.

   Authority: Land Use Code 20.30P.140
   Reviewer: Reilly Pittman, Development Services Department

2. **Final Mitigation and Restoration Planting:** The mitigation planting proposed is required to be installed and the plans submitted under the application are considered conceptual. A final plan is required to be submitted under future construction permits. All areas of

temporary disturbance within critical areas and buffers shall be restored. The plans submitted shall provide full planting specifications and details.

Authority: Land Use Code 20.30P.140; 20.25H.220
Reviewer: Reilly Pittman, Development Services Department

3. **Mitigation for Steep Slope Impacts:** The submitted plans show that a .42 acre area of steep slopes west of 124th Avenue NE will be impacted. The future mitigation plans shall provide mitigation for this impact and show how the impacted slope is mitigated for by the project.

   Authority: Land Use Code 20.30P.140; 20.25H.220
   Reviewer: Reilly Pittman, Development Services Department

4. **Maintenance and Monitoring:** Maintenance and monitoring of the mitigation planting is required for five years per the plan found in the submitted critical areas assessment as Attachment 3. A copy of the monitoring reports is required to be submitted to the Environmental Planning Manager for the Land Use Division of Development Services annually.

   Authority: Land Use Code 20.30P.140; 20.25H.220
   Reviewer: Reilly Pittman, Development Services Department

5. **Construction from Ichigo Way to Northup Way:** Construction from Ichigo Way to Northup Way and the culvert replacement is proposed to be delayed and will require separate development permits. Please reference the expiration note above.

   Authority: Land Use Code 20.30P.140
   Reviewer: Reilly Pittman, Development Services Department

   Stream Bed and Culvert Design: A fish passable culvert that meets the requirement of the Water Crossing Design Guidelines (WDFW, 2013) or as amended is required. The plans submitted under the future clearing and grading permit that includes the culvert crossing shall clearly depict the design of the stream bed and gradients including any rock bands and any material placed to cover the bands. Any WDFW requirements of a future HPA permit approval for a fish passable culvert must be implemented as outlined on the permit.

   Authority: Land Use Code 20.25H.055.C.2.b
   Reviewer: Reilly Pittman, Development Services Department

Attachment 1

95% SUBMITTAL NOT FOR CONSTRUCTION

CITY OF BELLEVUE
TRANSPORTATION DEPARTMENT

124th Ave NE - NE Spring Blvd to NE Ichigo Way
ROADWAY IMPROVEMENTS

SCHEDULE OF DRAWINGS

SHT NAME	TITLE
COV	COVER SHEET, VICINITY MAP & INDEX
LG1–LG2	LEGEND, ABBREVIATIONS, AND GENERAL NOTES
RS1–RS7	ROADWAY TYPICAL SECTIONS
STCG1	STAGING & TRAFFIC CONTROL LEGEND/NOTES
STC1–STC18	STAGING & TRAFFIC CONTROL PLANS
STCD1	STAGING & TRAFFIC CONTROL DETAILS
SP1–SP6	SITE PREPARATION PLANS
AL1–AL5	ALIGNMENT & PROFILE PLANS
PV1–PV5	PAVING PLANS
PVD1–PVD8	PAVING DETAILS
IG1–IG5	INTERSECTION GRADING PLANS
EC1–EC5	TESC PLANS
ECD1	TESC DETAILS
DR1–DR4	DRAINAGE PLANS
DRP1–DRP5	DRAINAGE PROFILES
DT1–DT6	DRAINAGE DETAILS
UT1–UT4	UTILITY PLAN & PROFILES
UTD1	UTILITY DETAILS
WM1–WM7	WATER MAIN PLAN & PROFILES
WMD1	WATER MAIN DETAILS
WMN1	WATER MAIN & UTILITY SEQUENCING PLAN
TUS1	TEMPORARY UTILITY SERVICE
IR1–IR4	IRRIGATION PLANS
IRD1–IRD3	IRRIGATION DETAILS
LS1–LS7	LANDSCAPE & URBAN DESIGN PLANS
LSD1–LSD8	LANDSCAPE DETAILS
WPN1	RETAINING WALL NOTES AND KEY PLAN
WP1–WP7A	RETAINING WALL PLANS
WD1–WD11	RETAINING WALL DETAILS
PRD1–PRD2	PEDESTRIAN RAILING AND THROW FENCE DETAILS
CH1–CH4	CHANNELIZATION PLANS
DWP0–DWP7	DRIVEWAY APPROACH PLAN & PROFILES
ILS1–ILS4	ILLUMINATION & SIGNING PLANS
ILD1	ILLUMINATION DETAILS
TS1–TS3	TRAFFIC SIGNAL PLANS
BR1–BR34	BRIDGE PLANS & DETAILS
DET1	DETOUR PLAN

INTERIM CITY MANAGER
BRAD MIYAKE

MAYOR
CLAUDIA BALDUCCI

DEPUTY MAYOR
KEVIN WALLACE

DIRECTOR OF TRANSPORTATION
DAVID BERG

CITY COUNCIL
CONRAD LEE
JOHN CHELMINIAK
JENNIFER ROBERTSON
LYNNE ROBINSON
JOHN STOKES

C.I.P. NO. PW-R-169
FEDERAL AID NO. XXXX
BID NO. XXXX

95% SUBMITTAL NOT FOR CONSTRUCTION

SURVEY AND CENTERLINE CONTROL

BASIS OF BEARINGS NAD83/NSR2007 HELD CITY OF BELLEVUE CONTROL POINT 2710

CONTROL POINT #	NAD83/NSR2007	PROJECT COORDINATES
2710	N: 230689.587 E: 1309567.900	N: 500,000 E: 500,000

DISTANCES SHOWN ON THESE PLANS ARE GROUND SCALE COMBINED FACTOR = 0.99996798

VERTICAL CONTROL
VERTICAL DATUM: NAVD88

CITY OF BELLEVUE BENCH MARK NO. 151 WEST SIDE OF 120TH AVE NE 150' NORTH OF VECA ELECTRIC 2023 120TH AVE NE STAMPED 151 TOP MIDDLE BOLT OF THREE ON EAST SIDE OF BASE FOR RR CROSSING SIGNAL POLE.

SURVEY LEGEND

PROPOSED | EXISTING

- ANGLE POINT (AP)
- BENCH MARK (BM)
- BLOCK CORNER (BC)
- IRON PIPE (IP)
- MONUMENT (IN CASE) (MIC)
- MONUMENT (SURFACE) (MON)
- OWNERSHIP TIE (OT)

SECTION DATA:
- SECTION CENTER
- SECTION CORNER
- QUARTER CORNER
- SIXTEENTH CORNER
- CLOSING CORNER
- MEANDER CORNER (MC)
- WITNESS CORNER (WC)
- SOIL BORING (SB)
- SPOT ELEVATION (SE)
- TAX LOT / PARCEL NUMBER

ROADWAY CHANNELIZATION LEGEND

- BIKE PATH
- ONLY SYMBOL
- STOP

LANE CONTROL ARROWS:
- STRAIGHT ARROW
- 2-WAY LEFT TURN
- LEFT TURN ARROW
- RIGHT TURN ARROW
- LEFT-STRAIGHT ARROW

RAISED MARKERS:
- LANE MARKERS TYPE I
- LANE MARKERS TYPE II

GAS / POWER / TELEPHONE LEGEND

- GAS METER
- GAS VALVE
- PAD MOUNTED TRANSFORMER
- POWER VAULT
- TRANSMISSION TOWER
- UTILITY POLE
- UTILITY POLE ANCHOR
- TELEPHONE RISER
- TELEPHONE VAULT

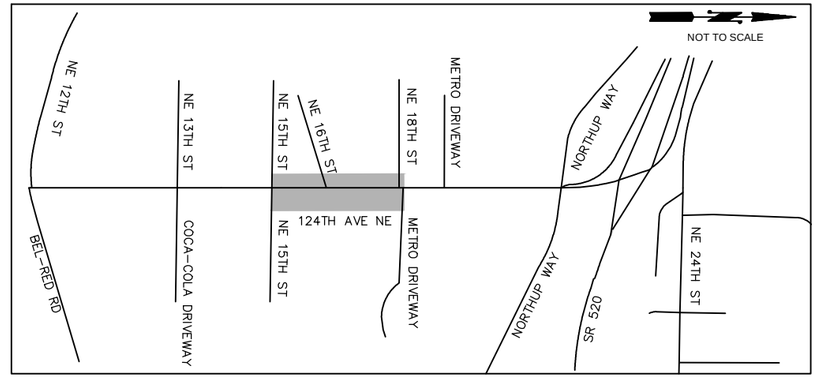

PROJECT VICINITY MAP

LANDSCAPING LEGEND

PROPOSED | EXISTING

- RIP RAP
- ROCKERY
- SHRUB
- SIGN
- TREE (Conifer)
- TREE (Deciduous)
- YARD LIGHT

SANITARY / STORM / SEWER LEGEND

- SAN. SEWER CLEAN OUT
- SAN. SEWER MANHOLE
- STORM DRAIN CATCH BASIN TYPE 1
- STORM DRAIN CATCH BASIN TYPE 2
- STORM DRAIN CULVERT
- STORM DRAIN MANHOLE

SIGNALIZATION LEGEND

- OPTICOM SENSOR
- JUNCTION BOX (TYPE I, II, III)
- PEDESTRIAN PUSHBUTTON POST W/ PUSHBUTTON
- PEDESTRIAN SIGNAL HEAD
- POLE NOTE
- SIGNAL CONTROLLER

SIGNAL LOAD CENTER:
- SERVICE CABINET
- STREET LIGHT ASSEMBLY

TRAFFIC SIGNS:
- SINGLE POST
- DOUBLE POST
- TRAFFIC SIGNAL POLE
- TRAFFIC SIGNAL POLE W/ LUMINARE
- VEHICLE SIGNAL HEAD
- VEHICLE SIGNAL HEAD W/ ARROW INDICATOR
- WIRE NOTE
- LOOP DETECTION

WATER SYMBOLS

PROPOSED | EXISTING

- ADAPTER, FL. x M.J.

BENDS:
- 90 DEGREE BEND, FL.
- 45 DEGREE BEND, FL.
- 22.5 DEGREE BEND, FL.
- 11.25 DEGREE BEND, FL.
- 90 DEGREE BEND, M.J.
- 45 DEGREE BEND, M.J.
- 22.5 DEGREE BEND, M.J.
- 11.25 DEGREE BEND, M.J.
- VERTICAL BEND, FL.
- VERTICAL BEND, M.J.

REDUCERS:
- REDUCER, FL.
- REDUCER, M.J.
- REDUCER, M.J. x FL.
- REDUCER, P.E.
- REDUCER, P.E. x M.J./FL. x M.J.

TEES:
- TAPPING TEE & VALVE, FL. x M.J.
- TEE, FL.
- TEE, M.J.
- TEE, M.J. x FL.

VALVES:
- BUTTERFLY VALVE, FL.
- BUTTERFLY VALVE, FL. x M.J.
- BUTTERFLY VALVE, M.J.
- GATE VALVE, FL.
- GATE VALVE, FL. x M.J.
- GATE VALVE, M.J.
- AIR RELIEF VALVE (AIR)
- BLOW-OFF VALVE (BO)
- CHECK VALVE (CK)
- PLUG VALVE (PV)
- CAP/PLUG
- COUPLING (CPL)
- GUARD POST (GP)
- REDUCER (RED)
- THRUST BLOCK (TB)
- WATER METER (WM)

FIRE HYDRANTS:
- 2-PORT (FH)
- 3-PORT (FH)

JOINTS:
- FLANGE/BLIND FL (FL)/(BL FL)
- MECHANICAL (MJ)
- PUSH-ON/HUB
- THREAD (THD)

PAUL A. FERNER, STATE OF WASHINGTON, 43172, REGISTERED PROFESSIONAL ENGINEER

NO.	DATE	BY	APPR.	REVISIONS

Approved By

TRANSPORTATION DESIGN MANAGER — DATE
M. ARAKELYAN
PROJECT MANAGER — DATE

S. HAYS — DESIGNED BY — DATE
J. FRYE — DRAWN BY — DATE
G. ROYCROFT — CHECKED BY — DATE

City of Bellevue
TRANSPORTATION DEPARTMENT

HDR

124th Ave NE - NE Spring Blvd to NE Ichigo Way

LEGEND AND ABBREVIATIONS

SHEET NAME LG1

SHT 2 OF 198

95% SUBMITTAL NOT FOR CONSTRUCTION

LINETYPES

LINETYPES	PROPOSED	EXISTING
GAS LINE	G	G
FIBER OPTIC LINE	FO	FO
STORM DRAIN LINE	SD	SD
SANITARY SEWER LINE	SS	SS
WATER LINE	W	W
OVERHEAD FIBER OPTIC LINE	OHF	OHF
OVERHEAD TELEPHONE LINE	OHT	OHT
OVERHEAD TELEVISION	OHTV	OHTV
OVERHEAD ELECTRIC	OHE	OHE
POLYVINYL CHLORIDE LINE	PVC	PVC
SILT FENCE LINE	SF	SF
UNDERGROUND ELECTRIC LINE	UGE	UGE
UNDERGROUND TELEPHONE LINE	UGT	UGT
CUT LINE	CUT	
FILL LINE	FILL	
HIGH VISIBILITY FENCE	HVF	
FENCE	X X	X X
IRRIGATION LINE	IRR	IRR
WATTLE		
TREE LINE		
FLOW ARROW		
SAWCUT		
RIGHT-OF-WAY (LIMITED ACCESS)		
RIGHT-OF-WAY		
PROPERTY LINE		
EASEMENT (PERMANENT)		
EASEMENT (TEMPORARY)		
RETAINING WALL		
CONTOUR		
TRAFFIC/ILLUMINATION/ INTC/ITS		

ABBREVIATIONS

@ = AT
+/- = PLUS OR MINUS
ABUT. = ABUTMENT
A.P. = ANGLE POINT
ASPH. = ASPHALT
ASTM = AMERICAN STANDARD TEST METHOD
APS = ACCESSIBLE PEDESTRIAN SIGNAL
AVE. = AVENUE
BAT = BUSINESS ACCESS AND TRANSIT
BLDG. = BUILDING
BRG. = BRIDGE
BVC = BEGIN VERTICAL CURVE
CAL. = CALIPER* (SIZE OF TREE)
CALC = CALCULATED
CB = CATCH BASIN
CESCL = CERTIFIED EROSION AND SEDIMENT CONTROL LEAD
CDF = CONTROL DENSITY FILL
C.I.P. = CAST IN PLACE
CJ = CONCRETE JOINT
CL. = CLASS
CL = CENTERLINE
CLR. = CLEARANCE
CSBC = CRUSHED SURFACE BASE COURSE
CSTC = CRUSHED SURFACE TOP COURSE
CTR. = CENTER
C.O.B. = CITY OF BELLEVUE
CONC. = CONCRETE
CONT. = CONTINUE
C.Y. = CUBIC YARD
DIAM./DIA. = DIAMETER
DW = DRIVEWAY
DWG. = DRAWING
E = EAST
EB = EAST BOUND
e = SUPERELEVATION
EJ = EXPANSION JOINT
ELEV. = ELEVATION
ENT. = ENTRANCE
EOP = EDGE OF PAVEMENT
ESC. = EROSION AND SEDIMENT CONTROL
EST. = ESTIMATED
EVC. = END VERTICAL CURVE
FED. = FEDERAL
FT = FOOT
FTG. = FOOTING
FTB = FLUIDIZED THERMAL BACKFILL
FL = FLOWLINE / FLANGE
G = GRADE
GALV. = GALVANIZED
GIS = GEOGRAPHIC INFORMATION SYSTEMS
G.P.M. = GALLONS PER MINUTE
GL = GUTTER LINE
HMA = HOT MIX ASPHALT
H:V = HORIZONTAL TO VERTICAL
HUND = HUNDRED
HVF = HIGH VISIBILITY FENCE
IE = INVERT ELEVATION
I.D. = INSIDE DIAMETER
ID = IDENTIFICATION
IN. = INCH
INCL. = INCLUDING
ITS = INTELLIGENT TRANSPORTATION SYSTEM
KSI = KIPS PER SQUARE INCH
L = LENGTH
LK. = LAKE
LBS. = POUNDS
L.F. = LINEAR FOOT
LOL = LAYOUT LINE
LRT = LIGHT RAIL TRAIN
L.S. = LUMP SUM
LT = LEFT
MAX. = MAXIMUM
MIN. = MINIMUM
M.P. = MILE POST
MPH = MILE PER HOUR
MOD = MODIFIED
MSE = MECHANICALLY STABILIZED EARTH
N = NORTH
NAVD = NORTH AMERICAN VERTICAL DATUM
NB = NORTH BOUND
NO. = NUMBER
N.T.S. = NOT TO SCALE
NST = NOT STEEPER THAN
O.C. = ON CENTER
P.C. = POINT OF CURVATURE
P.G.A. = PERMANENT GROUND ANCHOR
P.E. = PROFESSIONAL ENGINEER
PERF = PERFORATED
P.I. = POINT OF INTERSECTION
P.O.T. = POINT ON TANGENT
PL. = PLACE
PLN = PLAN
P.S.I. = POUNDS PER SQUARE INCH
P.T. = POINT OF TANGENCY
PC = POINT OF CURVATURE
PCC = PORTLAND CEMENT CONCRETE
PDFSM = PRECAST DUAL FACED SLOPED MOUNTABLE
PG = PERFORMANCE GRADE
POB = POINT OF BEGINNING
POC = POINT ON CURVE
POE = POINT OF ENDING
POT = POINT ON TANGENT
PROJ. = PROJECT
PRVC = POINT OF REVERSE VERTICAL CURVE
PS = POWER SOURCE
PSIPE = PLANT SELECTION INCLUDING PLANT ESTABLISHMENT
PVC = POLYVINYL CHLORIDE
PVMT. = PAVEMENT
R = RADIUS / RANGE
REINF. = REINFORCING
ROW = RIGHT OF WAY
RT = RIGHT
S = SOUTH
SB = SOUTH BOUND
SCH. = SCHEDULE
SCL = SEATTLE CITY LIGHT
SE WALL/ SEW = STRUCTURAL EARTH WALL
S.F. = SQUARE FOOT
SHT. = SHEET
SPA. = SPACING
SPCC = SPILL PREVENTION, CONTROL AND COUNTERMEASURES
SPEC = SPECIFICATION
SR = STATE ROUTE
SQ. = SQUARE
STD. = STANDARD
STA. = STANDARD
SWPPP = STORMWATER POLLUTION PREVENTION PLAN
T = TANGENT LENGTH OF CURVE / TOWNSHIP
TESC = TEMPORARY EROSION AND SEDIMENT CONTROL
TPR = TRANSIT PRIORITY READER
TPRG = TRANSIT PRIORITY REQUEST GENERATOR
TSP = TRANSIT SIGNAL PRIORITY
TYP. = TYPICAL
U.N.O. = UNLESS NOTED OTHERWISE
VC = VERTICAL CURVE
V.A.P. = VERTICAL ANGLE POINT
VPI = VERTICAL POINT OF INTERSECTION
W = WEST
W/ = WITH
WB = WEST BOUND
W.M. = WILLAMETTE MERIDIAN
WML-CB-XX = WATER MONITORING LOCATION-CATCH BASIN-##
WML-DT-XX = WATER MONITORING LOCATION-DITCH-##
WSDOT = WASHINGTON STATE DEPARTMENT OF TRANSPORTATION
WWM = WELDED WIRE MESH

PAUL A. FERRER STATE OF WASHINGTON 43172 REGISTERED PROFESSIONAL ENGINEER

NO.	DATE	BY	APPR.	REVISIONS

Approved By

TRANSPORTATION DESIGN MANAGER — DATE
M. ARAKELYAN
PROJECT MANAGER — DATE

S. HAYS
DESIGNED BY — DATE
J. FRYE
DRAWN BY — DATE
G. ROYCROFT
CHECKED BY — DATE

City of Bellevue
TRANSPORTATION DEPARTMENT

HDR

124th Ave NE - NE Spring Blvd to NE Ichigo Way

LEGEND AND ABBREVIATIONS

SHEET NAME **LG2**

SHT 3 OF 198

95% SUBMITTAL NOT FOR CONSTRUCTION

GENERAL NOTES:

1. NST = NOT STEEPER THAN
2. SEE PAVING PLAN FOR VARIABLE WIDTHS.
3. ALL DIMENSIONS IN FEET UNLESS OTHERWISE SHOWN.
4. SIDEWALK IS 5" THICK TYPICAL, 6" THICK TYPICAL AT LOCATIONS THAT SERVE AS DRIVEWAYS.
5. FOR MEDIAN DETAILS, AND PLANTER AREAS, SEE LANDSCAPE PLANS AND URBAN DESIGN PLANS.
6. FOR SIDEWALK TYPE AND LOCATION, PAVING LIMITS, AND JOINTING PLANS SEE PAVING PLANS AND DETAILS.
7. ALTERNATE SIDEWALK SECTIONS ON RS6–RS7 OVERRIDE TYPICAL EDGE AND MEDIAN CONDITIONS ON RS1–RS5.
8. SEE RETAINING WALL PLANS FOR WALL LOCATIONS, PLAN, PROFILE AND DETAILS.
9. SEE DRAINAGE DETAILS FOR BIORETENTION SWALE CROSS SECTION.
10. ROADWAY CROSS SLOPE VARIES, SEE SUPERELEVATION DIAGRAMS ON ROADWAY PROFILES AND FINISHED PAVEMENT GRADES ON INTERSECTION GRADING PLANS.
11. SEE DRIVEWAY APPROACH PLANS FOR TRANSITION AREAS BETWEEN SIDEWALK AND GRADING LIMITS.
12. FOR DIMENSIONS OF PEDESTRIAN BARRIER AND THROW SCREEN, SEE BRIDGE PLANS.
13. SEE BRIDGE PLANS FOR BRIDGE DECK DESIGN AND WINGWALLS.

LEGEND:

HMA

CRUSHED SURFACING TOP COURSE

CONSTRUCTION NOTES:

1. HMA CL 1/2 IN., PG 70–22
2. HMA CL 1/2 IN., PG 64–22
4. CRUSHED SURFACING TOP COURSE
5. GRAVEL BORROW INCL. HAUL
7. CEMENT CONC. TRAFFIC CURB AND GUTTER (COB STD. DWG. TE–10 AND ROW–9)

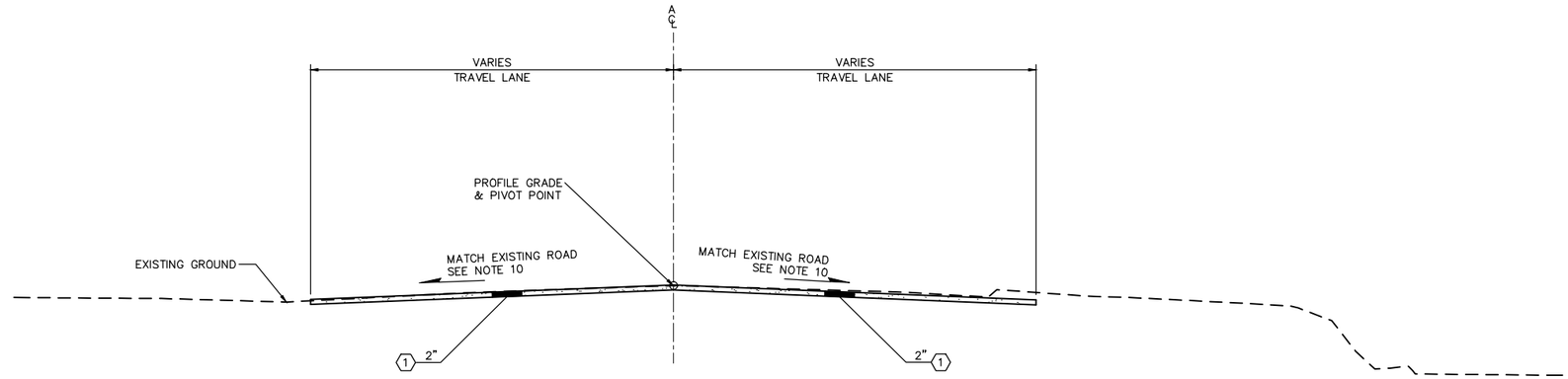

124TH AVE NE ROADWAY SECTION A

NOT TO SCALE
STA. A 16+00 TO 16+10

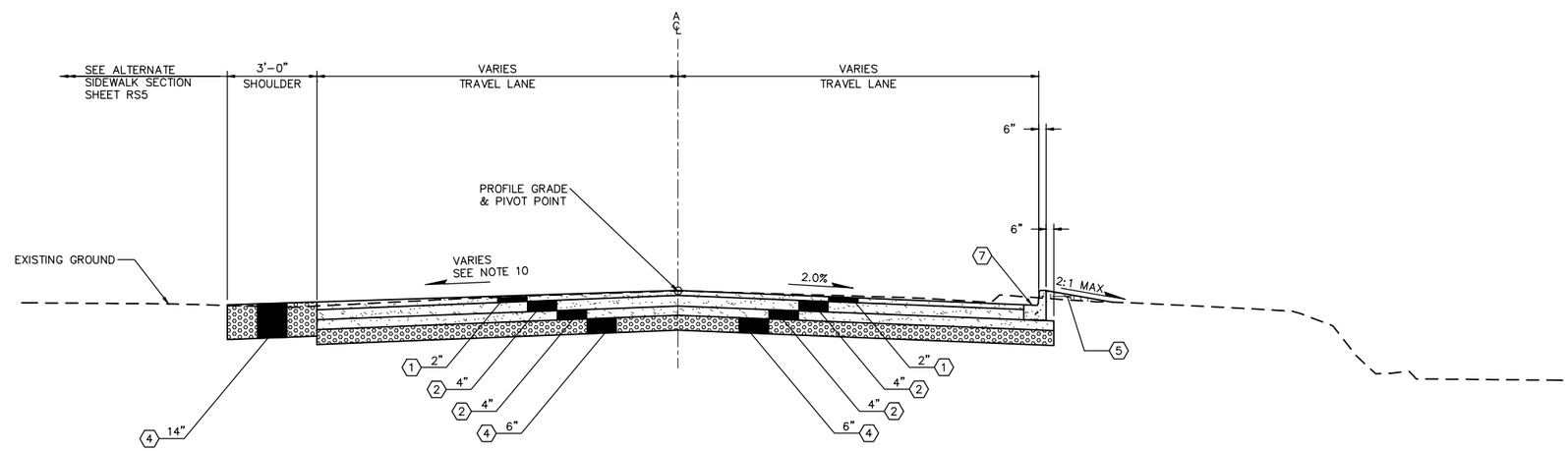

124TH AVE NE ROADWAY SECTION B

NOT TO SCALE
STA. A 16+10 LT TO 16+93 LT
STA. A 16+10 RT TO 17+44 RT

PAUL A. FERRER
STATE OF WASHINGTON
43172
REGISTERED
PROFESSIONAL ENGINEER

NO.	DATE	BY	APPR.	REVISIONS

Approved By

TRANSPORTATION DESIGN MANAGER — DATE
M. ARAKELYAN
PROJECT MANAGER — DATE

S. HAYS
DESIGNED BY — DATE
J. FRYE
DRAWN BY — DATE
G. ROYCROFT
CHECKED BY — DATE

City of Bellevue
TRANSPORTATION DEPARTMENT

HDR

124th Ave NE - NE Spring Blvd to NE Ichigo Way

ROADWAY TYPICAL SECTIONS

SHEET NAME RS1

SHT 4 OF 198

95% SUBMITTAL NOT FOR CONSTRUCTION

GENERAL NOTES:

1. NST = NOT STEEPER THAN
2. SEE PAVING PLAN FOR VARIABLE WIDTHS.
3. ALL DIMENSIONS IN FEET UNLESS OTHERWISE SHOWN.
4. SIDEWALK IS 5" THICK TYPICAL, 6" THICK TYPICAL AT LOCATIONS THAT SERVE AS DRIVEWAYS.
5. FOR MEDIAN DETAILS, AND PLANTER AREAS, SEE LANDSCAPE PLANS AND URBAN DESIGN PLANS.
6. FOR SIDEWALK TYPE AND LOCATION, PAVING LIMITS, AND JOINTING PLANS SEE PAVING PLANS AND DETAILS.
7. ALTERNATE SIDEWALK SECTIONS ON RS6–RS7 OVERRIDE TYPICAL EDGE AND MEDIAN CONDITIONS ON RS1–RS5.
8. SEE RETAINING WALL PLANS FOR WALL LOCATIONS, PLAN, PROFILE AND DETAILS.
9. SEE DRAINAGE DETAILS FOR BIORETENTION SWALE CROSS SECTION.
10. ROADWAY CROSS SLOPE VARIES, SEE SUPERELEVATION DIAGRAMS ON ROADWAY PROFILES AND FINISHED PAVEMENT GRADES ON INTERSECTION GRADING PLANS.
11. SEE DRIVEWAY APPROACH PLANS FOR TRANSITION AREAS BETWEEN SIDEWALK AND GRADING LIMITS.
12. FOR DIMENSIONS OF PEDESTRIAN BARRIER AND THROW SCREEN, SEE BRIDGE PLANS.
13. SEE BRIDGE PLANS FOR BRIDGE DECK DESIGN AND WINGWALLS.

LEGEND:

- HMA
- CRUSHED SURFACING TOP COURSE
- GRAVEL BORROW INCL. HAUL
- PIGMENTED CEMENT CONC. SIDEWALK / DRIVEWAY ENTRANCE / CURB / BRIDGE APPROACH SLAB / CEMENT CONC. BRIDGE DECK / CEMENT CONC. PAVEMENT
- GRAVEL BACKFILL FOR STRUCTURAL EARTH WALL

CONSTRUCTION NOTES:

1. HMA CL 1/2 IN., PG 70–22
2. HMA CL 1/2 IN., PG 64–22
3. CEMENT CONC. PAVEMENT
4. CRUSHED SURFACING TOP COURSE
5. GRAVEL BORROW INCL. HAUL
6. CEMENT CONC. SIDEWALK (COB STD. DWG. TE–11)
7. CEMENT CONC. TRAFFIC CURB AND GUTTER (COB STD. DWG. TE–10 AND ROW–9)
8. GRAVEL BACKFILL FOR WALLS

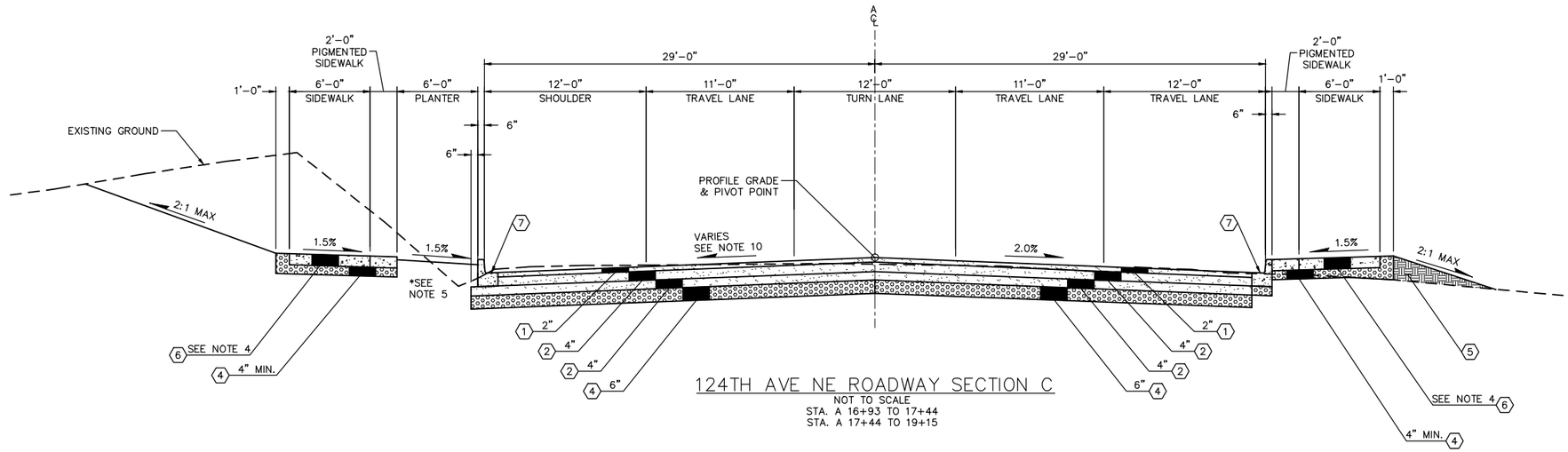

124TH AVE NE ROADWAY SECTION C
NOT TO SCALE
STA. A 16+93 TO 17+44
STA. A 17+44 TO 19+15

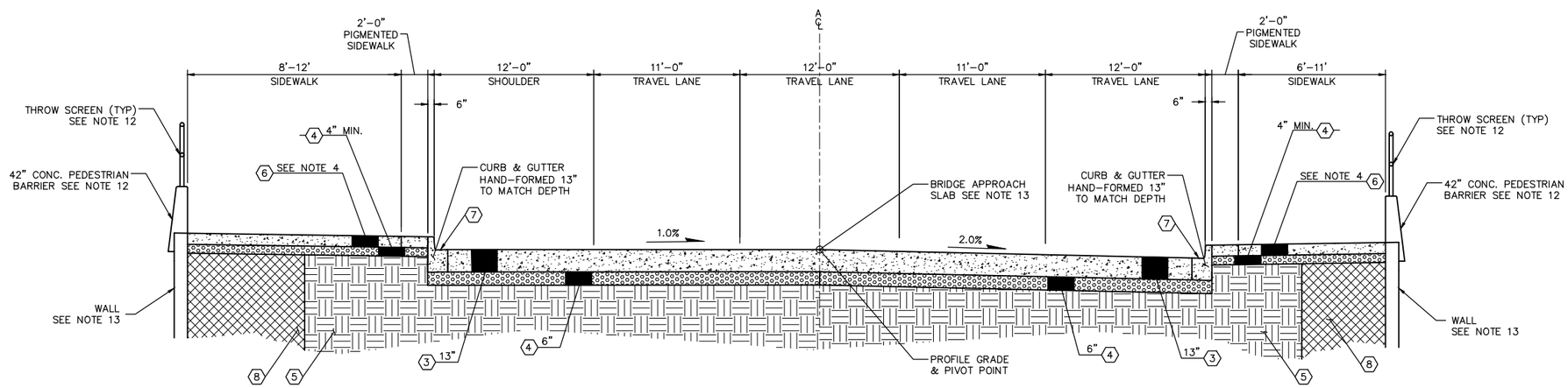

124TH AVE NE ROADWAY SECTION D – BRIDGE APPROACH SLAB
NOT TO SCALE
STA. A 19+15 TO STA. A 19+35
STA. A 19+75 TO STA. A 19+93

PAUL A. FERRIER STATE OF WASHINGTON 43172 REGISTERED PROFESSIONAL ENGINEER

NO.	DATE	BY	APPR.	REVISIONS

Approved By

TRANSPORTATION DESIGN MANAGER — DATE
M. ARAKELYAN
PROJECT MANAGER — DATE

S. HAYS — DESIGNED BY — DATE
J. FRYE — DRAWN BY — DATE
G. ROYCROFT — CHECKED BY — DATE

City of Bellevue
TRANSPORTATION DEPARTMENT

HDR

124th Ave NE - NE Spring Blvd to NE Ichigo Way

ROADWAY TYPICAL SECTIONS

SHEET NAME RS2

SHT 5 OF 198

95% SUBMITTAL NOT FOR CONSTRUCTION

GENERAL NOTES:

1. NST = NOT STEEPER THAN
2. SEE PAVING PLAN FOR VARIABLE WIDTHS.
3. ALL DIMENSIONS IN FEET UNLESS OTHERWISE SHOWN.
4. SIDEWALK IS 5" THICK TYPICAL, 6" THICK TYPICAL AT LOCATIONS THAT SERVE AS DRIVEWAYS.
5. FOR MEDIAN DETAILS, AND PLANTER AREAS, SEE LANDSCAPE PLANS AND URBAN DESIGN PLANS.
6. FOR SIDEWALK TYPE AND LOCATION, PAVING LIMITS, AND JOINTING PLANS SEE PAVING PLANS AND DETAILS.
7. ALTERNATE SIDEWALK SECTIONS ON RS6–RS7 OVERRIDE TYPICAL EDGE AND MEDIAN CONDITIONS ON RS1–RS5.
8. SEE RETAINING WALL PLANS FOR WALL LOCATIONS, PLAN, PROFILE AND DETAILS.
9. SEE DRAINAGE DETAILS FOR BIORETENTION SWALE CROSS SECTION.
10. ROADWAY CROSS SLOPE VARIES, SEE SUPERELEVATION DIAGRAMS ON ROADWAY PROFILES AND FINISHED PAVEMENT GRADES ON INTERSECTION GRADING PLANS.
11. SEE DRIVEWAY APPROACH PLANS FOR TRANSITION AREAS BETWEEN SIDEWALK AND GRADING LIMITS.
12. FOR DIMENSIONS OF PEDESTRIAN BARRIER AND THROW SCREEN, SEE BRIDGE PLANS.
13. SEE BRIDGE PLANS FOR BRIDGE DECK DESIGN AND WINGWALLS.

LEGEND:

- CRUSHED SURFACING TOP COURSE
- GRAVEL BORROW INCL. HAUL
- PIGMENTED CEMENT CONC. SIDEWALK / DRIVEWAY ENTRANCE / CURB / BRIDGE APPROACH SLAB / CEMENT CONC. BRIDGE DECK / CEMENT CONC. PAVEMENT

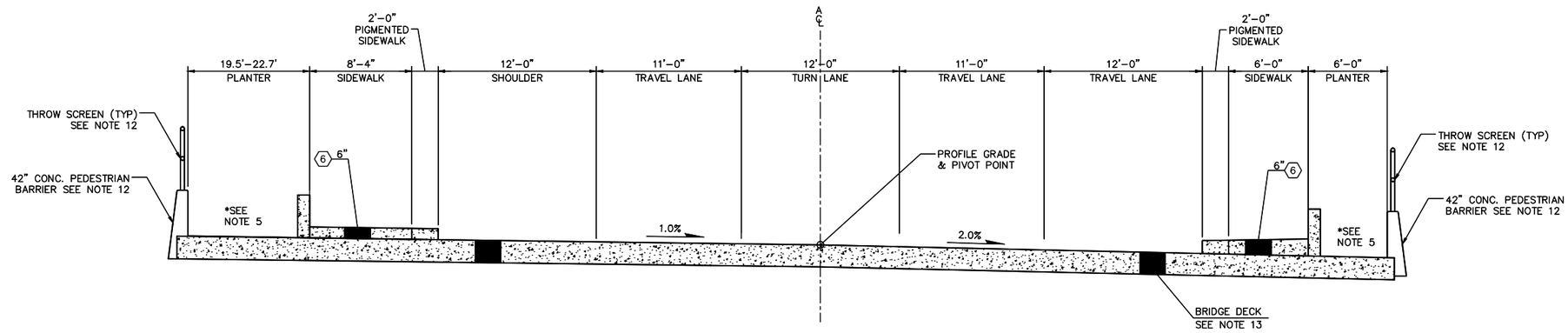

124TH AVE NE ROADWAY SECTION E – BRIDGE SECTION

NOT TO SCALE

STA. A 19+35 TO STA. A 19+75

CONSTRUCTION NOTES:

3. CEMENT CONC. PAVEMENT
4. CRUSHED SURFACING TOP COURSE
5. GRAVEL BORROW INCL. HAUL
6. CEMENT CONC. SIDEWALK (COB STD. DWG. TE–11)
7. CEMENT CONC. TRAFFIC CURB AND GUTTER (COB STD. DWG. TE–10 AND ROW–9)

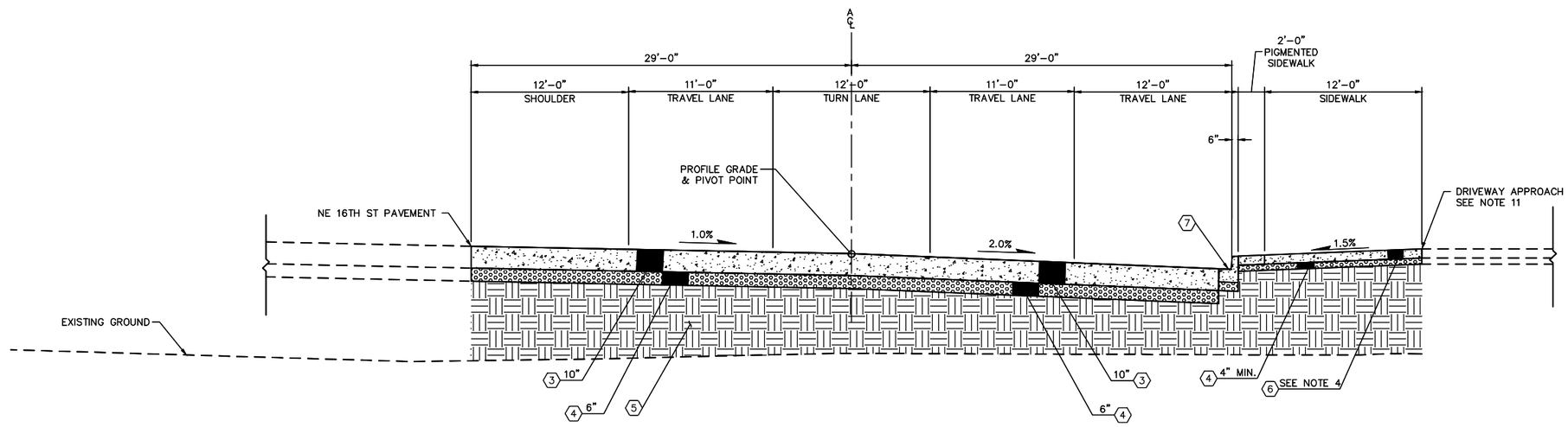

124TH AVE NE ROADWAY SECTION F – NE 16TH ST INTERSECTION

NOT TO SCALE

STA. A 19+93 TO 20+65

NO.	DATE	BY	APPR.	REVISIONS

Approved By

TRANSPORTATION DESIGN MANAGER — DATE
M. ARAKELYAN
PROJECT MANAGER — DATE

S. HAYS — DESIGNED BY — DATE
J. FRYE — DRAWN BY — DATE
G. ROYCROFT — CHECKED BY — DATE

City of Bellevue
TRANSPORTATION DEPARTMENT

HDR

124th Ave NE - NE Spring Blvd to NE Ichigo Way

ROADWAY TYPICAL SECTIONS

SHEET NAME RS3

SHT 6 OF 198

95% SUBMITTAL NOT FOR CONSTRUCTION

GENERAL NOTES:

1. NST = NOT STEEPER THAN
2. SEE PAVING PLAN FOR VARIABLE WIDTHS.
3. ALL DIMENSIONS IN FEET UNLESS OTHERWISE SHOWN.
4. SIDEWALK IS 5" THICK TYPICAL, 6" THICK TYPICAL AT LOCATIONS THAT SERVE AS DRIVEWAYS.
5. FOR MEDIAN DETAILS, AND PLANTER AREAS, SEE LANDSCAPE PLANS AND URBAN DESIGN PLANS.
6. FOR SIDEWALK TYPE AND LOCATION, PAVING LIMITS, AND JOINTING PLANS SEE PAVING PLANS AND DETAILS.
7. ALTERNATE SIDEWALK SECTIONS ON RS6–RS7 OVERRIDE TYPICAL EDGE AND MEDIAN CONDITIONS ON RS1–RS5.
8. SEE RETAINING WALL PLANS FOR WALL LOCATIONS, PLAN, PROFILE AND DETAILS.
9. SEE DRAINAGE DETAILS FOR BIORETENTION SWALE CROSS SECTION.
10. ROADWAY CROSS SLOPE VARIES, SEE SUPERELEVATION DIAGRAMS ON ROADWAY PROFILES AND FINISHED PAVEMENT GRADES ON INTERSECTION GRADING PLANS.
11. SEE DRIVEWAY APPROACH PLANS FOR TRANSITION AREAS BETWEEN SIDEWALK AND GRADING LIMITS.
12. FOR DIMENSIONS OF PEDESTRIAN BARRIER AND THROW SCREEN, SEE BRIDGE PLANS.
13. SEE BRIDGE PLANS FOR BRIDGE DECK DESIGN AND WINGWALLS.

LEGEND:

- HMA
- CRUSHED SURFACING TOP COURSE
- GRAVEL BORROW INCL. HAUL
- PIGMENTED CEMENT CONC. SIDEWALK / DRIVEWAY ENTRANCE / CURB / BRIDGE APPROACH SLAB / CEMENT CONC. BRIDGE DECK / CEMENT CONC. PAVEMENT
- GRAVEL BACKFILL FOR STRUCTURAL EARTH WALL

CONSTRUCTION NOTES:

1. HMA CL 1/2 IN., PG 70–22
2. HMA CL 1/2 IN., PG 64–22
4. CRUSHED SURFACING TOP COURSE
5. GRAVEL BORROW INCL. HAUL
6. CEMENT CONC. SIDEWALK (COB STD. DWG. TE–11)
7. CEMENT CONC. TRAFFIC CURB AND GUTTER (COB STD. DWG. TE–10 AND ROW–9)
8. GRAVEL BACKFILL FOR WALLS

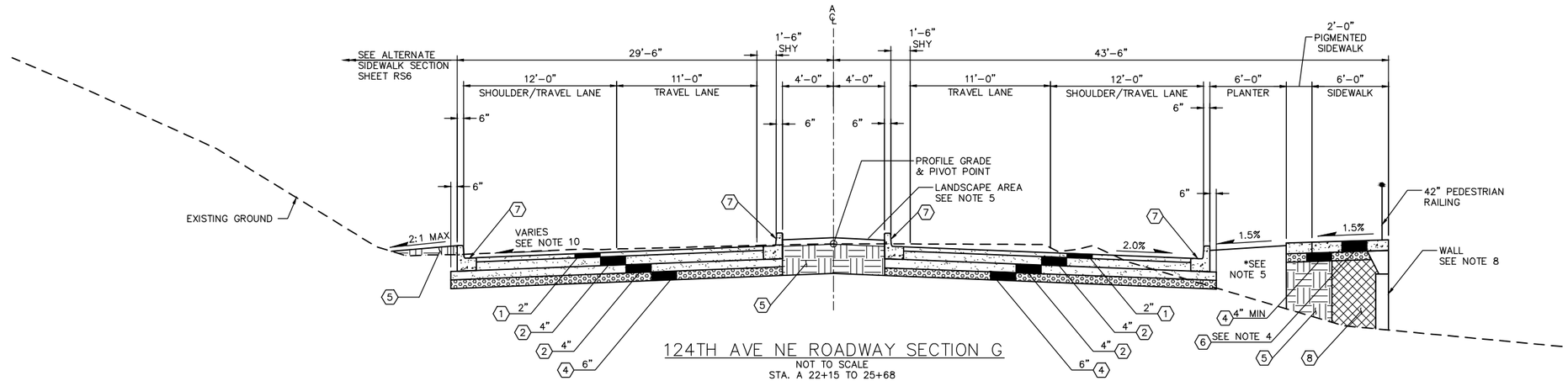

124TH AVE NE ROADWAY SECTION G
NOT TO SCALE
STA. A 22+15 TO 25+68

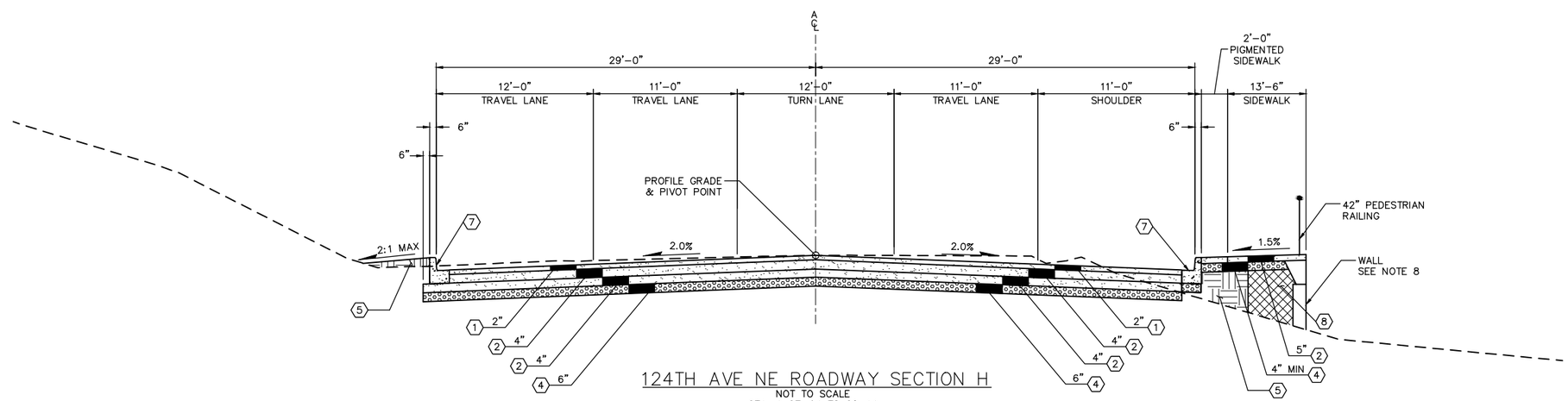

124TH AVE NE ROADWAY SECTION H
NOT TO SCALE
STA. A 27+64 TO 28+14

NO.	DATE	BY	APPR.	REVISIONS

Approved By

TRANSPORTATION DESIGN MANAGER — DATE
M. ARAKELYAN
PROJECT MANAGER — DATE

S. HAYS — DESIGNED BY — DATE
J. FRYE — DRAWN BY — DATE
G. ROYCROFT — CHECKED BY — DATE

City of Bellevue
TRANSPORTATION DEPARTMENT

HDR

124th Ave NE - NE Spring Blvd to NE Ichigo Way

ROADWAY TYPICAL SECTIONS

SHEET NAME **RS4**

SHT 7 OF 198

95% SUBMITTAL NOT FOR CONSTRUCTION

GENERAL NOTES:

1. NST = NOT STEEPER THAN
2. SEE PAVING PLAN FOR VARIABLE WIDTHS.
3. ALL DIMENSIONS IN FEET UNLESS OTHERWISE SHOWN.
4. SIDEWALK IS 5" THICK TYPICAL, 6" THICK TYPICAL AT LOCATIONS THAT SERVE AS DRIVEWAYS.
5. FOR MEDIAN DETAILS, AND PLANTER AREAS, SEE LANDSCAPE PLANS AND URBAN DESIGN PLANS.
6. FOR SIDEWALK TYPE AND LOCATION, PAVING LIMITS, AND JOINTING PLANS SEE PAVING PLANS AND DETAILS.
7. ALTERNATE SIDEWALK SECTIONS ON RS6–RS7 OVERRIDE TYPICAL EDGE AND MEDIAN CONDITIONS ON RS1–RS5.
8. SEE RETAINING WALL PLANS FOR WALL LOCATIONS, PLAN, PROFILE AND DETAILS.
9. SEE DRAINAGE DETAILS FOR BIORETENTION SWALE CROSS SECTION.
10. ROADWAY CROSS SLOPE VARIES, SEE SUPERELEVATION DIAGRAMS ON ROADWAY PROFILES AND FINISHED PAVEMENT GRADES ON INTERSECTION GRADING PLANS.
11. SEE DRIVEWAY APPROACH PLANS FOR TRANSITION AREAS BETWEEN SIDEWALK AND GRADING LIMITS.
12. FOR DIMENSIONS OF PEDESTRIAN BARRIER AND THROW SCREEN, SEE BRIDGE PLANS.
13. SEE BRIDGE PLANS FOR BRIDGE DECK DESIGN AND WINGWALLS.

LEGEND:

HMA

CONSTRUCTION NOTES:

(1) HMA CL 1/2 IN., PG 70–22

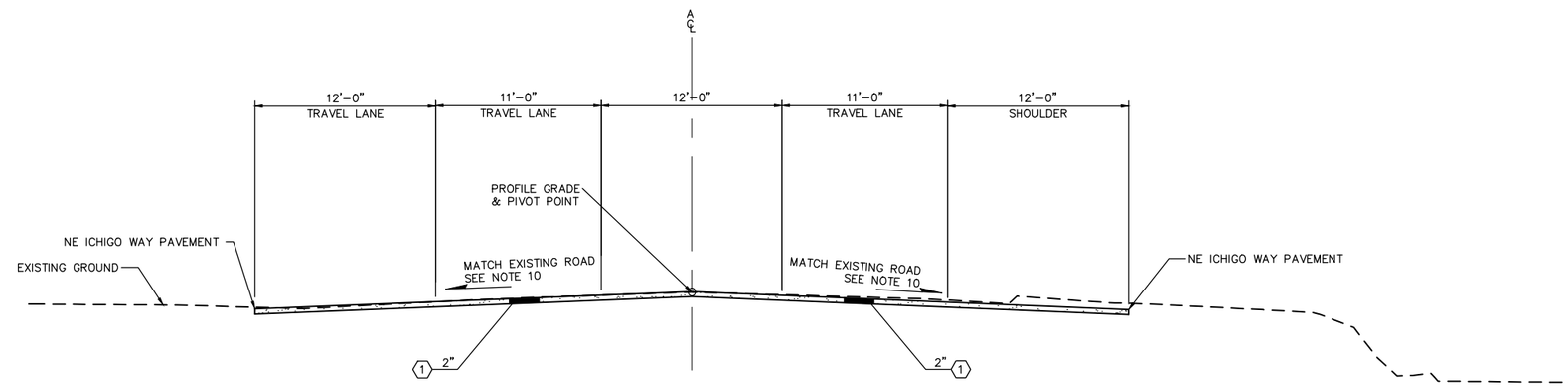

124TH AVE NE ROADWAY SECTION I
NOT TO SCALE
STA. A 28+14 TO 28+94

NO.	DATE	BY	APPR.	REVISIONS

Approved By

TRANSPORTATION DESIGN MANAGER — DATE
M. ARAKELYAN
PROJECT MANAGER — DATE

S. HAYS — DESIGNED BY — DATE
J. FRYE — DRAWN BY — DATE
G. ROYCROFT — CHECKED BY — DATE

City of Bellevue
TRANSPORTATION DEPARTMENT

124th Ave NE - NE Spring Blvd to NE Ichigo Way

ROADWAY TYPICAL SECTIONS

SHEET NAME RS5

SHT 8 OF 198

95% SUBMITTAL NOT FOR CONSTRUCTION

GENERAL NOTES:

1. NST = NOT STEEPER THAN
2. SEE PAVING PLAN FOR VARIABLE WIDTHS.
3. ALL DIMENSIONS IN FEET UNLESS OTHERWISE SHOWN.
4. SIDEWALK IS 5" THICK TYPICAL, 6" THICK TYPICAL AT LOCATIONS THAT SERVE AS DRIVEWAYS.
5. FOR MEDIAN DETAILS, AND PLANTER AREAS, SEE LANDSCAPE PLANS AND URBAN DESIGN PLANS.
6. FOR SIDEWALK TYPE AND LOCATION, PAVING LIMITS, AND JOINTING PLANS SEE PAVING PLANS AND DETAILS.
7. ALTERNATE SIDEWALK SECTIONS ON RS6–RS7 OVERRIDE TYPICAL EDGE AND MEDIAN CONDITIONS ON RS1–RS5.
8. SEE RETAINING WALL PLANS FOR WALL LOCATIONS, PLAN, PROFILE AND DETAILS.
9. SEE DRAINAGE DETAILS FOR BIORETENTION SWALE CROSS SECTION.
10. ROADWAY CROSS SLOPE VARIES, SEE SUPERELEVATION DIAGRAMS ON ROADWAY PROFILES AND FINISHED PAVEMENT GRADES ON INTERSECTION GRADING PLANS.
11. SEE DRIVEWAY APPROACH PLANS FOR TRANSITION AREAS BETWEEN SIDEWALK AND GRADING LIMITS.
12. FOR DIMENSIONS OF PEDESTRIAN BARRIER AND THROW SCREEN, SEE BRIDGE PLANS.
13. SEE BRIDGE PLANS FOR BRIDGE DECK DESIGN AND WINGWALLS.

LEGEND:

- HMA
- CRUSHED SURFACING TOP COURSE
- GRAVEL BORROW INCL. HAUL
- PIGMENTED CEMENT CONC. SIDEWALK / DRIVEWAY ENTRANCE / CURB / BRIDGE APPROACH SLAB / CEMENT CONC. BRIDGE DECK / CEMENT CONC. PAVEMENT
- GRAVEL BACKFILL FOR STRUCTURAL EARTH WALL

CONSTRUCTION NOTES:

4. CRUSHED SURFACING TOP COURSE
5. GRAVEL BORROW INCL. HAUL
6. CEMENT CONC. SIDEWALK (COB STD. DWG. TE–11)
7. CEMENT CONC. TRAFFIC CURB AND GUTTER (COB STD. DWG. TE–10 AND ROW–9)
8. GRAVEL BACKFILL FOR WALLS

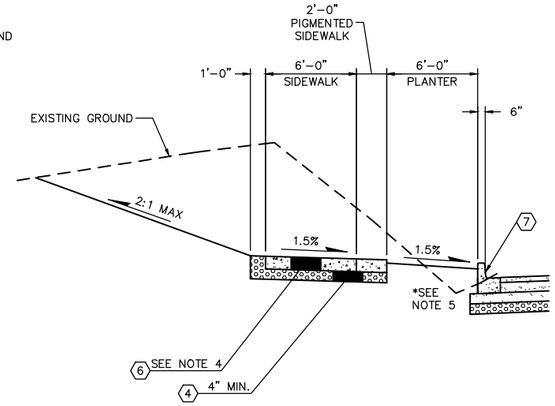

ALTERNATE SIDEWALK SECTION
NOT TO SCALE
STA. A 17+12 TO STA. A 17+44

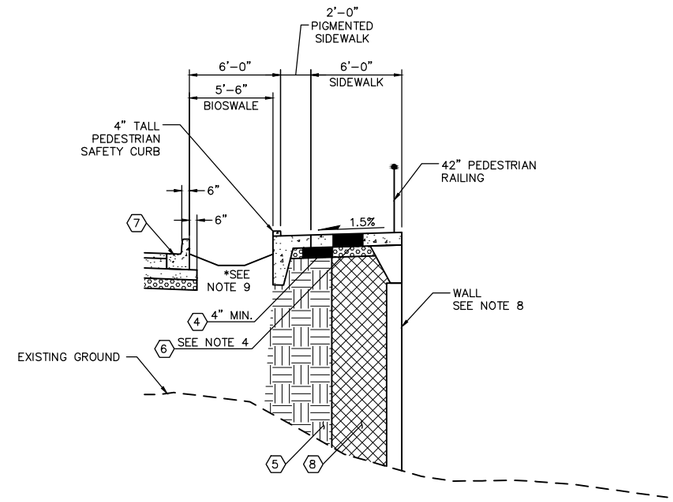

ALTERNATE SIDEWALK SECTION
NOT TO SCALE
STA. A 21+97 TO STA. A 22+85
STA. A 24+24 TO STA. A 25+06

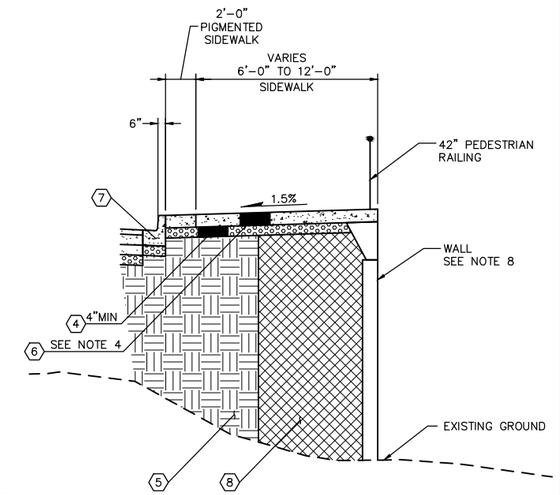

ALTERNATE SIDEWALK SECTION
NOT TO SCALE
STA. A 17+65 TO STA. A 17+74
STA. A 18+11 TO STA. A 18+54
STA. A 23+53 TO STA. A 23+61
STA. A 27+64 TO STA. A 28+09

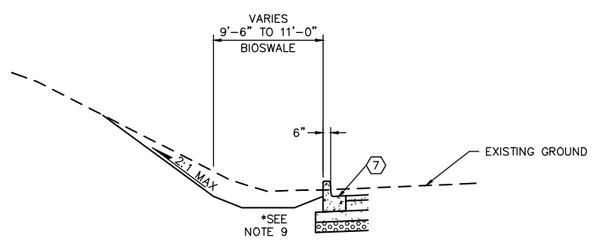

ALTERNATE SIDEWALK SECTION
NOT TO SCALE
STA. A 26+59 TO STA. A 27+59

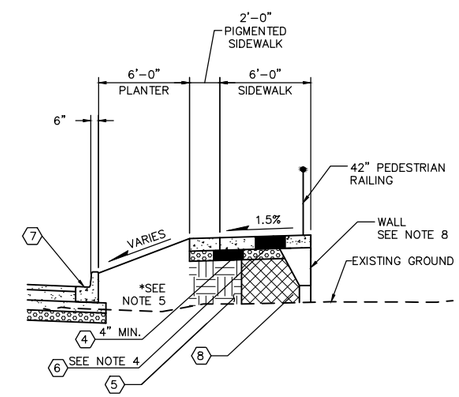

ALTERNATE SIDEWALK SECTION
NOT TO SCALE
STA. A 17+74 TO STA. A 18+11
STA. A 25+05 TO STA. A 26+00

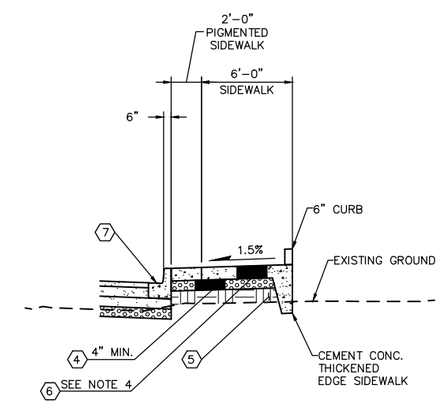

ALTERNATE SIDEWALK SECTION
NOT TO SCALE
STA. A 18+54 TO STA. A 18+77
STA. A 23+44 TO STA. A 23+49
STA. A 28+09 TO STA. A 28+15

PAUL A. FERGER
STATE OF WASHINGTON
43172
REGISTERED
PROFESSIONAL ENGINEER

NO.	DATE	BY	APPR.	REVISIONS

Approved By

TRANSPORTATION DESIGN MANAGER — DATE
M. ARAKELYAN
PROJECT MANAGER — DATE

S. HAYS — DESIGNED BY — DATE
J. FRYE — DRAWN BY — DATE
G. ROYCROFT — CHECKED BY — DATE

CITY OF BELLEVUE WASHINGTON
City of Bellevue
TRANSPORTATION DEPARTMENT

HDR

124th Ave NE - NE Spring Blvd to NE Ichigo Way

ROADWAY TYPICAL SECTIONS

SHEET NAME RS6

SHT 9 OF 198

95% SUBMITTAL NOT FOR CONSTRUCTION

GENERAL NOTES:

1. NST = NOT STEEPER THAN
2. SEE PAVING PLAN FOR VARIABLE WIDTHS.
3. ALL DIMENSIONS IN FEET UNLESS OTHERWISE SHOWN.
4. SIDEWALK IS 5" THICK TYPICAL, 6" THICK TYPICAL AT LOCATIONS THAT SERVE AS DRIVEWAYS.
5. FOR MEDIAN DETAILS, AND PLANTER AREAS, SEE LANDSCAPE PLANS AND URBAN DESIGN PLANS.
6. FOR SIDEWALK TYPE AND LOCATION, PAVING LIMITS, AND JOINTING PLANS SEE PAVING PLANS AND DETAILS.
7. ALTERNATE SIDEWALK SECTIONS ON RS6–RS7 OVERRIDE TYPICAL EDGE AND MEDIAN CONDITIONS ON RS1–RS5.
8. SEE RETAINING WALL PLANS FOR WALL LOCATIONS, PLAN, PROFILE AND DETAILS.
9. SEE DRAINAGE DETAILS FOR BIORETENTION SWALE CROSS SECTION.
10. ROADWAY CROSS SLOPE VARIES, SEE SUPERELEVATION DIAGRAMS ON ROADWAY PROFILES AND FINISHED PAVEMENT GRADES ON INTERSECTION GRADING PLANS.
11. SEE DRIVEWAY APPROACH PLANS FOR TRANSITION AREAS BETWEEN SIDEWALK AND GRADING LIMITS.
12. FOR DIMENSIONS OF PEDESTRIAN BARRIER AND THROW SCREEN, SEE BRIDGE PLANS.
13. SEE BRIDGE PLANS FOR BRIDGE DECK DESIGN AND WINGWALLS.

LEGEND:

- HMA
- CRUSHED SURFACING TOP COURSE
- GRAVEL BORROW INCL. HAUL
- PIGMENTED CEMENT CONC. SIDEWALK / DRIVEWAY ENTRANCE / CURB / BRIDGE APPROACH SLAB / CEMENT CONC. BRIDGE DECK / CEMENT CONC. PAVEMENT

CONSTRUCTION NOTES:

1. HMA CL 1/2 IN., PG 70–22
2. HMA CL 1/2 IN., PG 64–22
4. CRUSHED SURFACING TOP COURSE
5. GRAVEL BORROW INCL. HAUL
7. CEMENT CONC. TRAFFIC CURB AND GUTTER (COB STD. DWG. TE–10 AND ROW–9)

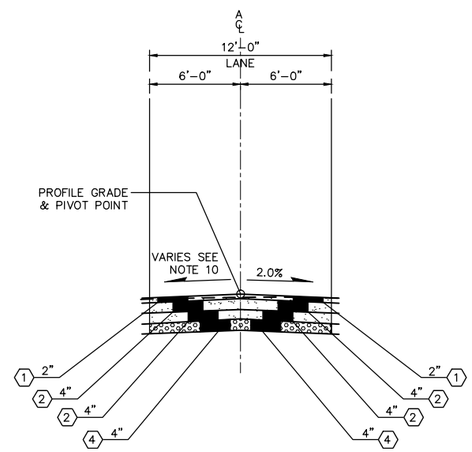

ALTERNATE MEDIAN SECTION
NOT TO SCALE
STA. A 16+99 TO STA. A 17+44

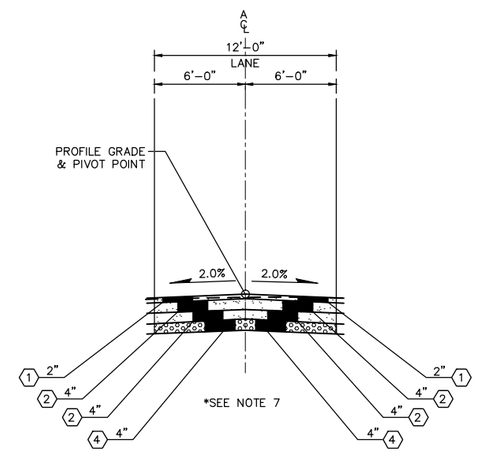

ALTERNATE MEDIAN SECTION
NOT TO SCALE
STA. A 20+65 TO STA. A 22+15
STA. A 25+68 TO STA. A 28+93

NO.	DATE	BY	APPR.	REVISIONS

Approved By

TRANSPORTATION DESIGN MANAGER — DATE
M. ARAKELYAN
PROJECT MANAGER — DATE

S. HAYS — DESIGNED BY — DATE
J. FRYE — DRAWN BY — DATE
G. ROYCROFT — CHECKED BY — DATE

City of Bellevue
TRANSPORTATION DEPARTMENT

124th Ave NE - NE Spring Blvd to NE Ichigo Way

ROADWAY TYPICAL SECTIONS

SHEET NAME RS7

SHT 10 OF 198

95% SUBMITTAL NOT FOR CONSTRUCTION

GENERAL NOTES:

1. A PROTECTIVE VEHICLE IS RECOMMENDED REGARDLESS IF A TRUCK MOUNTED ATTENUATOR (TMA) IS AVAILABLE; A WORK VEHICLE MAY BE USED. WHEN NO TMA IS USED, THE PROTECTIVE VEHICLE SHALL BE STRATEGICALLY LOCATED TO SHIELD WORKERS, WITH MINIMUM REQUIRED ROLL-AHEAD DISTANCE.
2. DEVICES SHALL NOT ENCROACH INTO ADJACENT LANES.
3. FOR SIGNS REFER TO MANUAL ON UNIFORM TRAFFIC CONTROL DEVICES (MUTCD) AND WSDOT SIGN FABRICATION MANUAL M55-05.
4. ALL ADDITIONAL TRAFFIC CONTROL FOR THE PROJECT WHICH INCLUDES, BUT IS NOT LIMITED TO, LANE CLOSURES, FLAGGING OPERATIONS, INTERSECTION CLOSURES, DETOUR PLANS, LANE SHIFTS, AND SHOULDER CLOSURES, SHALL BE SUBMITTED TO THE CITY AND THE ENGINEER FOR APPROVAL 5 DAYS IN ADVANCE OF IMPLEMENTATION.
5. PCMS LOCATIONS ARE APPROXIMATE AND MAY BE ADJUSTED.
6. CONFLICTING PAVEMENT MARKINGS NO LONGER APPLICABLE MUST BE REMOVED OR OBLITERATED AS SOON AS POSSIBLE.
7. STEADY BURN WARNING LIGHTS (TYPE C, MUTCD) SHOULD BE USED ON CHANNELIZING DEVICES AT NIGHT FOR DELINEATION.
8. CONTRACTORS SHALL MAINTAIN DRIVEWAY ACCESS TO ADJACENT PROPERTY OWNERS THROUGH THE DURATION OF THE PROJECT. THE MINIMUM DRIVEWAY WIDTH SHALL BE 10' WHERE TRAFFIC MUST ENTER AND EXIT AT DESIGNATED DRIVEWAYS FOR BUSINESS ACCESS, SUCH AS DRIVE THRU'S. THE CONTRACTOR SHALL KEEP ALL DRIVEWAYS OPEN TO TRAFFIC.
9. THE CONTRACTOR SHALL MAINTAIN 11 FOOT MINIMUM TRAVEL LANES DURING CONSTRUCTION EXCEPT DURING FINAL PAVEMENT RESTORATION

LONGITUDINAL BUFFER SPACE = B		
POSTED SPEED (MPH)	25	35
LENGTH (FT)	155	250

MINIMUM TAPER LENGTH=L (FEET)		
LANE WIDTH (FEET)	POSTED SPEED (MPH) 25	35
11	115	225
12	125	245

CHANNELIZING DEVICE SPACING		
POSTED SPEED (MPH)	IN TAPER (FEET)	IN TANGENT (FEET)
35 / 45	30	60
25 / 30	20	40

SIGN SPACING = X (1)		
RURAL ROADS & URBAN ARTERIALS	35 / 40 MPH	350' ±
RURAL ROADS, URBAN ARTERIALS, RESIDENTIAL & BUSINESS DISTRICTS	25 / 30 MPH	200' ± (2)

BUFFER DATA	
TYPICAL PROTECTIVE VEHICLE WITH TMA (SEE NOTE 1)	
VEHICLE TYPE	LOADED WEIGHT
4 YARD DUMP TRUCK, SERVICE TRUCK, FLAT BED, ETC.	MINIMUM WEIGHT 15,000 LBS. (MAXIMUM WEIGHT SHALL BE IN ACCORDANCE WITH MANU-FACTURER RECOMMENDATION)
1 ROLL-AHEAD STOPPING DISTANCE = 30 FEET MIN. (DRY PAVEMENT ASSUMED)	

(1) ALL SIGN SPACING MAY BE ADJUSTED TO ACCOMMODATE INTERCHANGE RAMPS, AT-GRADE INTERSECTIONS, DRIVEWAYS.

(2) THIS SIGN SPACING MAY BE REDUCED IN URBAN AREAS TO FIT ROADWAY CONDITIONS.

LEGEND

- SIGN LOCATION
- TYPE 2L BARRICADE
- TYPE 2R BARRICADE
- TYPE 3L BARRICADE
- TYPE 3R BARRICADE
- TRAFFIC SAFETY DRUM
- PROTECTIVE VEHICLE
- PCMS — PORTABLE CHANGEABLE MESSAGE SIGN (PCMS)
- ARROW PANEL
- WORK ZONE/STAGING AREA
- TEMPORARY ASPHALT
- XX' — DIRECTION OF TRAFFIC WITH LANE WIDTHS (XX)
- BRIDGE CONSTRUCTION STAGING HATCH

STAGING SEQUENCE STAGE 1 (EAST WORK ZONE):

1. INSTALL TEMPORARY PAVING AND PREP SITE FOR STAGE ONE WORK.
2. REMOVE EXISTING STRIPING AND INSTALL TEMPORARY STRIPING SIGNAGE AND BARRIER.
3. SHIFT LANES OF TRAFFIC TO WEST SIDE OF ROADWAY.
4. SAWCUT EXISTING PAVEMENT.
5. EXCAVATE ROADWAY IN WORK ZONE.
6. ADVERTISE ROADWAY CLOSURE – INSTALL PCMS.
7. CONSTRUCT TEMPORARY ACCESS RAMPS TO BUSINESSES IF REQUIRED. DELINEATE DRIVEWAYS WITH TRAFFIC SAFETY DRUMS AND BUSINESS SIGNS.
8. EXCAVATE FOR JOINT UTILITY TRENCH AND INSTALL UTILITIES, ILLUMINATION CONDUIT, JUNCTION BOXES, AND FOUNDATIONS.
9. PLACE ROADWAY BASE MATERIAL.
10. CONSTRUCT SIDEWALKS ALONG WITH ILLUMINATION CONDUIT, JUNCTION BOXES, AND FOUNDATIONS.
11. CONSTRUCT DRIVEWAY APPROACHES.
12. PLACE FIRST TWO LAYERS OF ASPHALT; WEARING COURSE SHALL BE INSTALLED WHEN ALL OTHER STAGES HAVE BEEN COMPLETED.
13. CONSTRUCT TEMPORARY ASPHALT WEDGE BETWEEN NEW PAVEMENT SECTION AND EXISTING ROAD.
14. INSTALL SIGNAL & ILLUMINATION POLES.
15. INSTALL LANDSCAPING WITHIN WORKZONE.
16. INSTALL TEMPORARY CHANNELIZATION STRIPING OVER NEWLY CONSTRUCTED ASPHALT FOR STAGE TWO TRAFFIC CONFIGURATION.

STAGING SEQUENCE STAGE 2 (WEST WORK ZONE):

1. RELOCATE TEMPORARY TRAFFIC SIGNS, BARRIER, AND INSTALL TEMPORARY SIGNAGE TO STAGE TWO CONFIGURATION.
2. SHIFT LANES OF TRAFFIC TO EAST SIDE OF ROADWAY.
3. SAWCUT EXISTING PAVEMENT.
4. EXCAVATE ROADWAY IN WORK ZONE.
5. ADVERTISE ROADWAY CLOSURE – INSTALL PCMS.
6. CONSTRUCT TEMPORARY ACCESS RAMPS TO BUSINESSES IF REQUIRED. DELINEATE DRIVEWAYS WITH TRAFFIC SAFETY DRUMS AND BUSINESS SIGNS.
7. EXCAVATE FOR JOINT UTILITY TRENCH AND INSTALL UTILITIES, ILLUMINATION CONDUIT, JUNCTION BOXES, AND FOUNDATIONS.
8. PLACE ROADWAY BASE MATERIAL.
9. CONSTRUCT SIDEWALKS.
10. CONSTRUCT DRIVEWAY APPROACHES.
11. PLACE FIRST TWO LAYERS OF ASPHALT.
12. CONSTRUCT TEMPORARY ASPHALT WEDGE BETWEEN NEW PAVEMENT SECTION AND EXISTING ROAD.
13. INSTALL SIGNAL & ILLUMINATION POLES.
14. INSTALL LANDSCAPING WITHIN WORKZONE.
15. INSTALL TEMPORARY CHANNELIZATION STRIPING OVER NEWLY CONSTRUCTED ASPHALT FOR STAGE THREE TRAFFIC CONFIGURATION.

STAGING SEQUENCE STAGE 3 (CENTRAL WORK ZONE):

1. RELOCATE TRAFFIC SIGNS, BARRIER, AND INSTALL TEMPORARY SIGNAGE TO STAGE THREE CONFIGURATION.
2. SHIFT LANES OF TRAFFIC TO BOTH SIDES OF ROADWAY.
3. SAWCUT EXISTING PAVEMENT.
4. EXCAVATE ROADWAY IN WORK ZONE.
5. CONSTRUCT TEMPORARY ACCESS RAMPS TO BUSINESSES IF REQUIRED. DELINEATE DRIVEWAYS WITH TRAFFIC SAFETY DRUMS AND BUSINESS SIGNS.
6. EXCAVATE FOR JOINT UTILITY TRENCH AND INSTALL UTILITIES.
7. PLACE ROADWAY BASE MATERIAL.
8. PLACE FIRST TWO LAYERS OF ASPHALT.
9. CONSTRUCT TEMPORARY ASPHALT WEDGE BETWEEN NEW PAVEMENT SECTION AND EXISTING ROAD.
10. INSTALL SIGNAL & ILLUMINATION POLES.
11. INSTALL LANDSCAPING WITHIN WORKZONE.
12. REMOVE TEMPORARY CHANNELIZATION STRIPING, TEMPORARY TRAFFIC SIGNS, TEMPORARY SAFETY DRUMS, AND BARRIERS.
13. PLACE WEARING COURSE ASPHALT LAYER ON ENTIRE PROJECT USING SINGLE LANE CLOSURES.
14. INSTALL PERMANENT STRIPING.

PAUL A. FERRER — STATE OF WASHINGTON — 43172 — REGISTERED PROFESSIONAL ENGINEER

NO.	DATE	BY	APPR.	REVISIONS

Approved By

TRANSPORTATION DESIGN MANAGER — DATE
M. ARAKELYAN
PROJECT MANAGER — DATE

S. HAYS — DESIGNED BY — DATE
J. FRYE — DRAWN BY — DATE
G. ROYCROFT — CHECKED BY — DATE

City of Bellevue
TRANSPORTATION DEPARTMENT

HDR

124th Ave NE - NE Spring Blvd to NE Ichigo Way

STAGING & TRAFFIC CONTROL LEGEND / NOTES

SHEET NAME STCG1

SHT 11 OF 198

GENERAL NOTES:

1. SEE SHEET STCG1 FOR LEGEND, GENERAL NOTES, STAGING SEQUENCE NOTES, BUFFER DATA TABLE, SIGN SPACING TABLE, MINIMUM TAPER LENGTH TABLE AND CHANNELIZATION DEVICE SPACING TABLE.
2. WORK WITHIN SCL EASEMENT AREA NEEDS TO COMPLY WITH SCL STANDARDS.

SECTION 28, T. 25 N., R5E., W.M.
KING COUNTY

95% SUBMITTAL NOT FOR CONSTRUCTION

CONSTRUCTION NOTES:

1. INSTALL WHITE EDGE LINE PER WSDOT STD. PLAN M-20.10-02
2. INSTALL YELLOW DOUBLE CENTERLINE LINE PER WSDOT STD. PLAN M-20.10-02

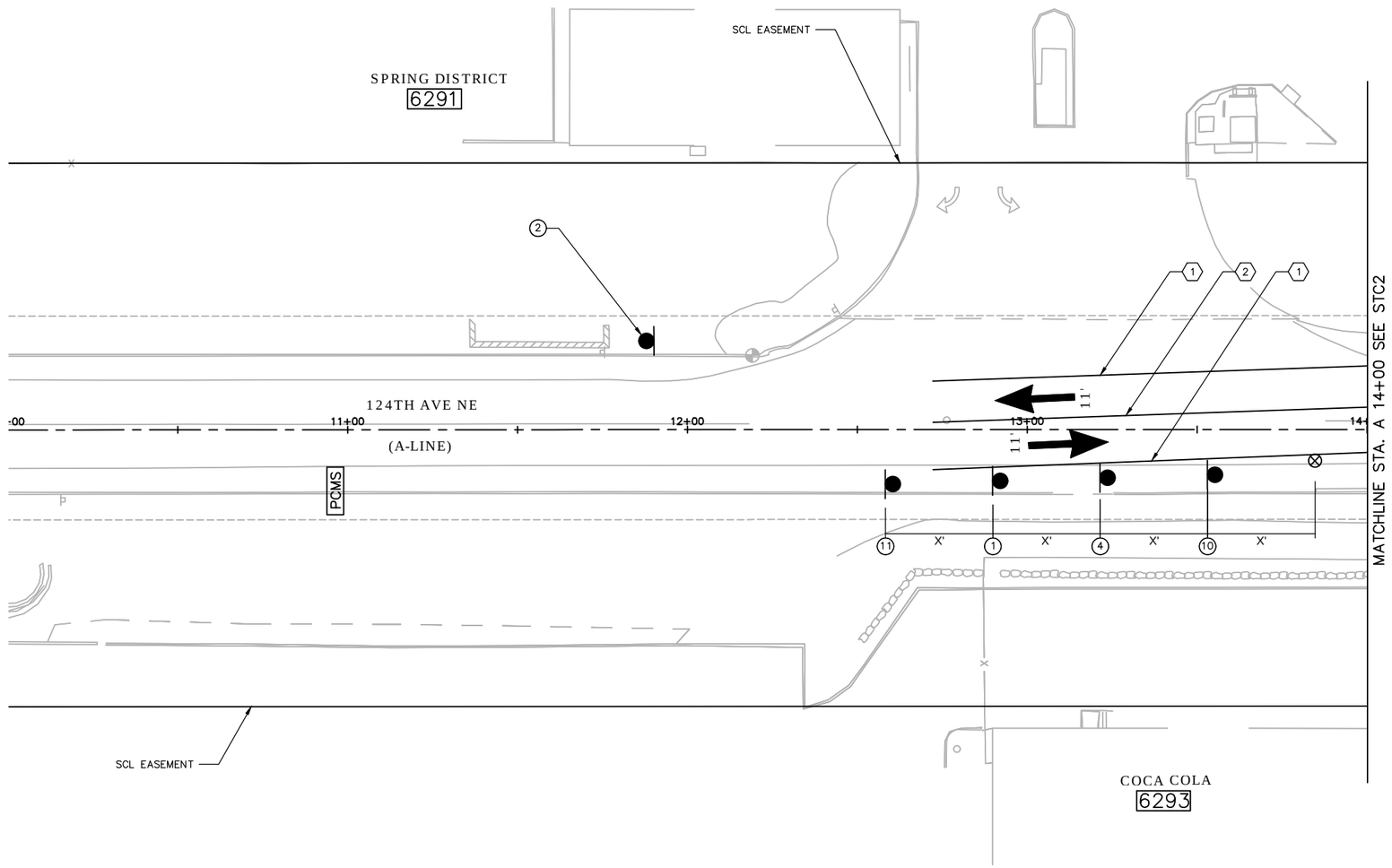

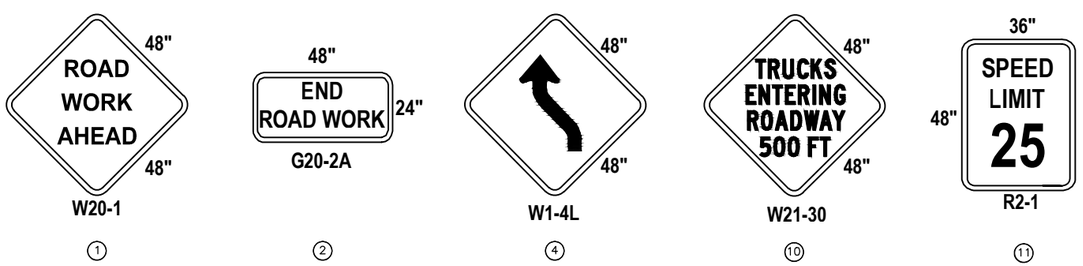

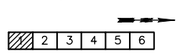

KEY PLAN

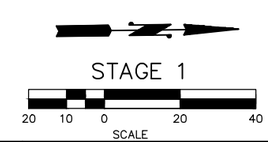

NO.	DATE	BY	APPR.	REVISIONS

Approved By

TRANSPORTATION DESIGN MANAGER — DATE
M. ARAKELYAN
PROJECT MANAGER — DATE

S. HAYS — DESIGNED BY — DATE
J. FRYE — DRAWN BY — DATE
G. ROYCROFT — CHECKED BY — DATE

City of Bellevue
TRANSPORTATION DEPARTMENT

HDR

124th Ave NE - NE Spring Blvd to NE Ichigo Way

STAGING & TRAFFIC CONTROL PLANS
BEGIN TO STA. A 14+00

SHEET NAME STC1

SHT 12 OF 198

GENERAL NOTES:

1. SEE SHEET STCG1 FOR LEGEND, GENERAL NOTES, STAGING SEQUENCE NOTES, BUFFER DATA TABLE, SIGN SPACING TABLE, MINIMUM TAPER LENGTH TABLE AND CHANNELIZATION DEVICE SPACING TABLE.
2. WORK WITHIN SCL EASEMENT AREA NEEDS TO COMPLY WITH SCL STANDARDS.

SECTION 28, T. 25 N., R5E., W.M.
KING COUNTY

95% SUBMITTAL NOT FOR CONSTRUCTION

CONSTRUCTION NOTES:

1. INSTALL WHITE EDGE LINE PER WSDOT STD. PLAN M-20.10-02
2. INSTALL YELLOW DOUBLE CENTERLINE LINE PER WSDOT STD. PLAN M-20.10-02

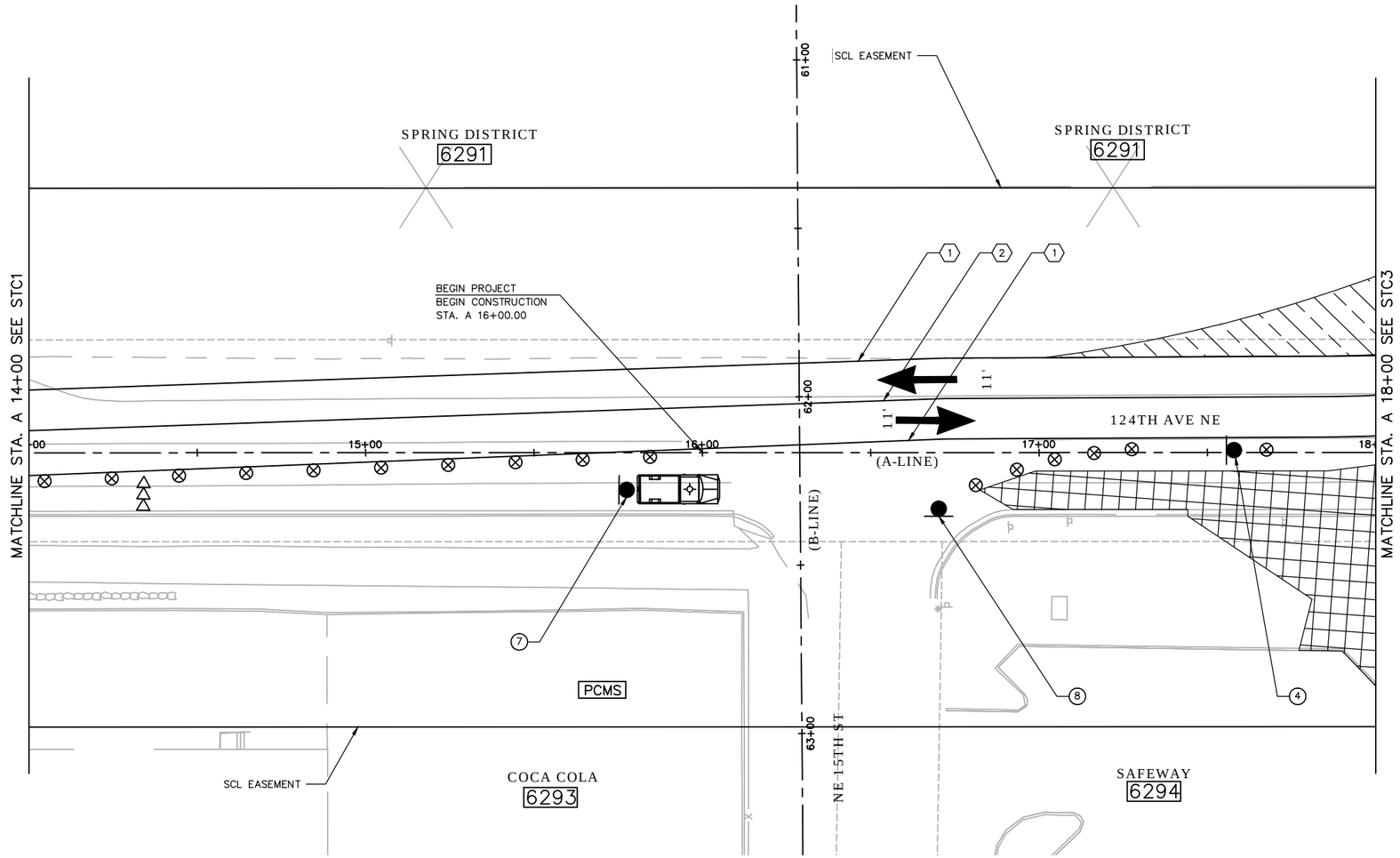

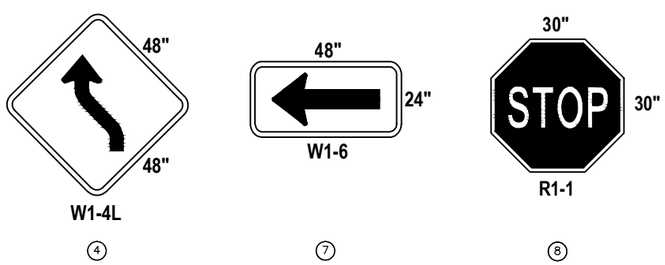

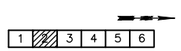

KEY PLAN

STAGE 1

20 10 0 20 40

SCALE

NO.	DATE	BY	APPR.	REVISIONS

Approved By

TRANSPORTATION DESIGN MANAGER — DATE
M. ARAKELYAN
PROJECT MANAGER — DATE

S. HAYS — DESIGNED BY — DATE
J. FRYE — DRAWN BY — DATE
G. ROYCROFT — CHECKED BY — DATE

City of Bellevue
TRANSPORTATION DEPARTMENT

HDR

124th Ave NE - NE Spring Blvd to NE Ichigo Way

STAGING & TRAFFIC CONTROL PLANS
STA. A 14+00 TO STA. A 18+00

SHEET NAME STC2

SHT 13 OF 198

95% SUBMITTAL NOT FOR CONSTRUCTION

SECTION 28, T. 25 N., R5E., W.M.
KING COUNTY

GENERAL NOTES:

1. SEE SHEET STCG1 FOR LEGEND, GENERAL NOTES, STAGING SEQUENCE NOTES, BUFFER DATA TABLE, SIGN SPACING TABLE, MINIMUM TAPER LENGTH TABLE AND CHANNELIZATION DEVICE SPACING TABLE.
2. WORK WITHIN SCL EASEMENT AREA NEEDS TO COMPLY WITH SCL STANDARDS.

CONSTRUCTION NOTES:

1. INSTALL WHITE EDGE LINE PER WSDOT STD. PLAN M-20.10-02
2. INSTALL YELLOW DOUBLE CENTERLINE LINE PER WSDOT STD. PLAN M-20.10-02
3. TEMPORARY CONCRETE BARRIER TYPE 2 PER WSDOT STD. PLAN C-8

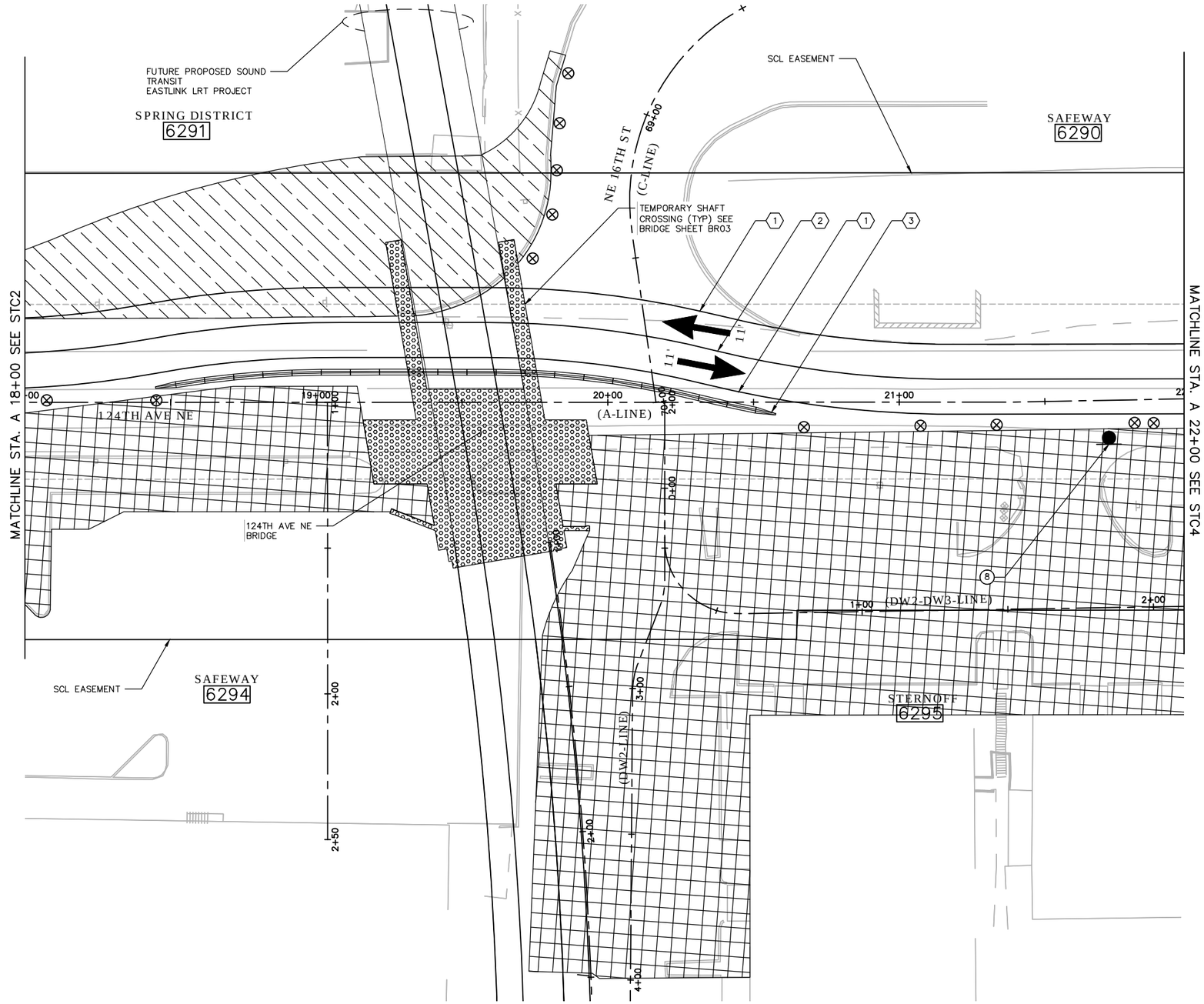

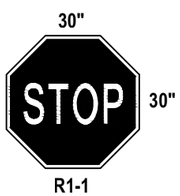

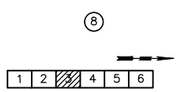

KEY PLAN

STAGE 1

20 10 0 20 40

SCALE

NO.	DATE	BY	APPR.	REVISIONS

Approved By

TRANSPORTATION DESIGN MANAGER — DATE
M. ARAKELYAN
PROJECT MANAGER — DATE

S. HAYS — DESIGNED BY — DATE
J. FRYE — DRAWN BY — DATE
G. ROYCROFT — CHECKED BY — DATE

City of Bellevue
TRANSPORTATION DEPARTMENT

HDR

124th Ave NE - NE Spring Blvd to NE Ichigo Way

STAGING & TRAFFIC CONTROL PLANS
STA. A 18+00 TO STA. A 22+00

SHEET NAME STC3

SHT 14 OF 198

GENERAL NOTES:

1. SEE SHEET STCG1 FOR LEGEND, GENERAL NOTES, STAGING SEQUENCE NOTES, BUFFER DATA TABLE, SIGN SPACING TABLE, MINIMUM TAPER LENGTH TABLE AND CHANNELIZATION DEVICE SPACING TABLE.
2. WORK WITHIN SCL EASEMENT AREA NEEDS TO COMPLY WITH SCL STANDARDS.

SECTION 28, T. 25 N., R5E., W.M.
KING COUNTY

95% SUBMITTAL NOT FOR CONSTRUCTION

CONSTRUCTION NOTES:

(1) INSTALL WHITE EDGE LINE PER WSDOT STD. PLAN M-20.10-02

(2) INSTALL YELLOW DOUBLE CENTERLINE LINE PER WSDOT STD. PLAN M-20.10-02

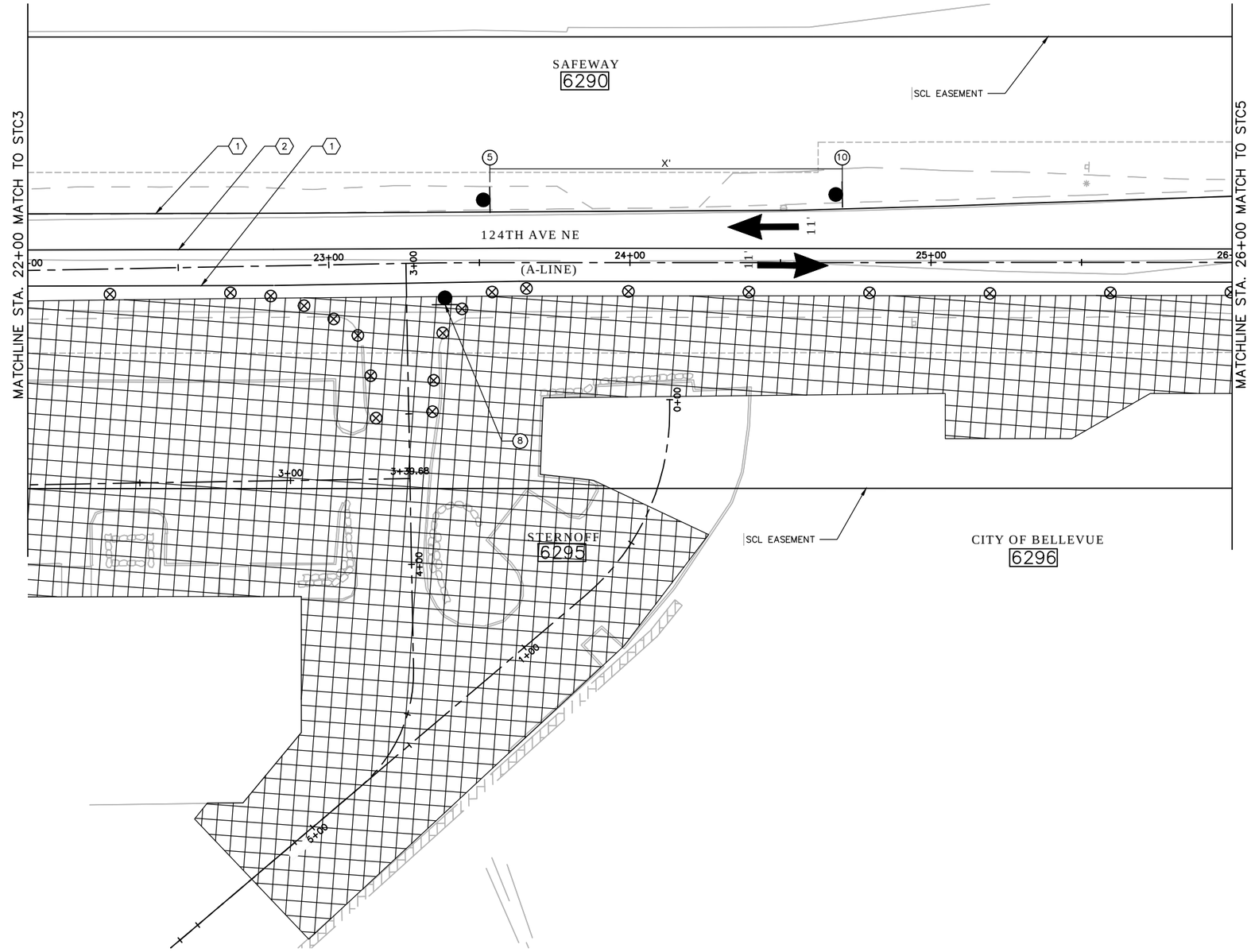

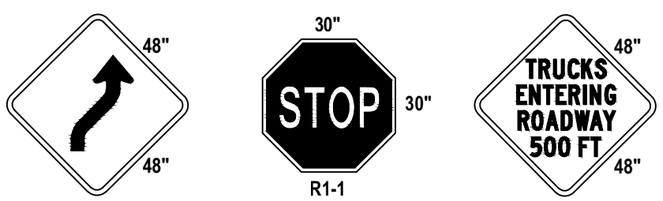

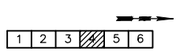

KEY PLAN

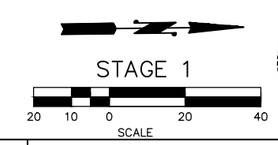

NO.	DATE	BY	APPR.	REVISIONS

Approved By

TRANSPORTATION DESIGN MANAGER — DATE
M. ARAKELYAN
PROJECT MANAGER — DATE

S. HAYS
DESIGNED BY — DATE
J. FRYE
DRAWN BY — DATE
G. ROYCROFT
CHECKED BY — DATE

City of Bellevue
TRANSPORTATION DEPARTMENT

HDR

124th Ave NE - NE Spring Blvd to NE Ichigo Way

STAGING & TRAFFIC CONTROL PLANS
STA. A 22+00 TO STA. A 26+00

SHEET NAME STC4

SHT 15 OF 198

95% SUBMITTAL NOT FOR CONSTRUCTION

SECTION 28, T. 25 N., R5E., W.M.
KING COUNTY

GENERAL NOTES:

1. SEE SHEET STCG1 FOR LEGEND, GENERAL NOTES, STAGING SEQUENCE NOTES, BUFFER DATA TABLE, SIGN SPACING TABLE, MINIMUM TAPER LENGTH TABLE AND CHANNELIZATION DEVICE SPACING TABLE.
2. WORK WITHIN SCL EASEMENT AREA NEEDS TO COMPLY WITH SCL STANDARDS.
3. CHANNELIZATION OUTSIDE OF THE PROJECT LIMITS IS TO BE RETURNED TO EXISTING CONDITIONS AFTER CONSTRUCTION IS COMPLETE.

CONSTRUCTION NOTES:

(1) INSTALL WHITE EDGE LINE PER WSDOT STD. PLAN M-20.10-02

(2) INSTALL YELLOW DOUBLE CENTERLINE LINE PER WSDOT STD. PLAN M-20.10-02

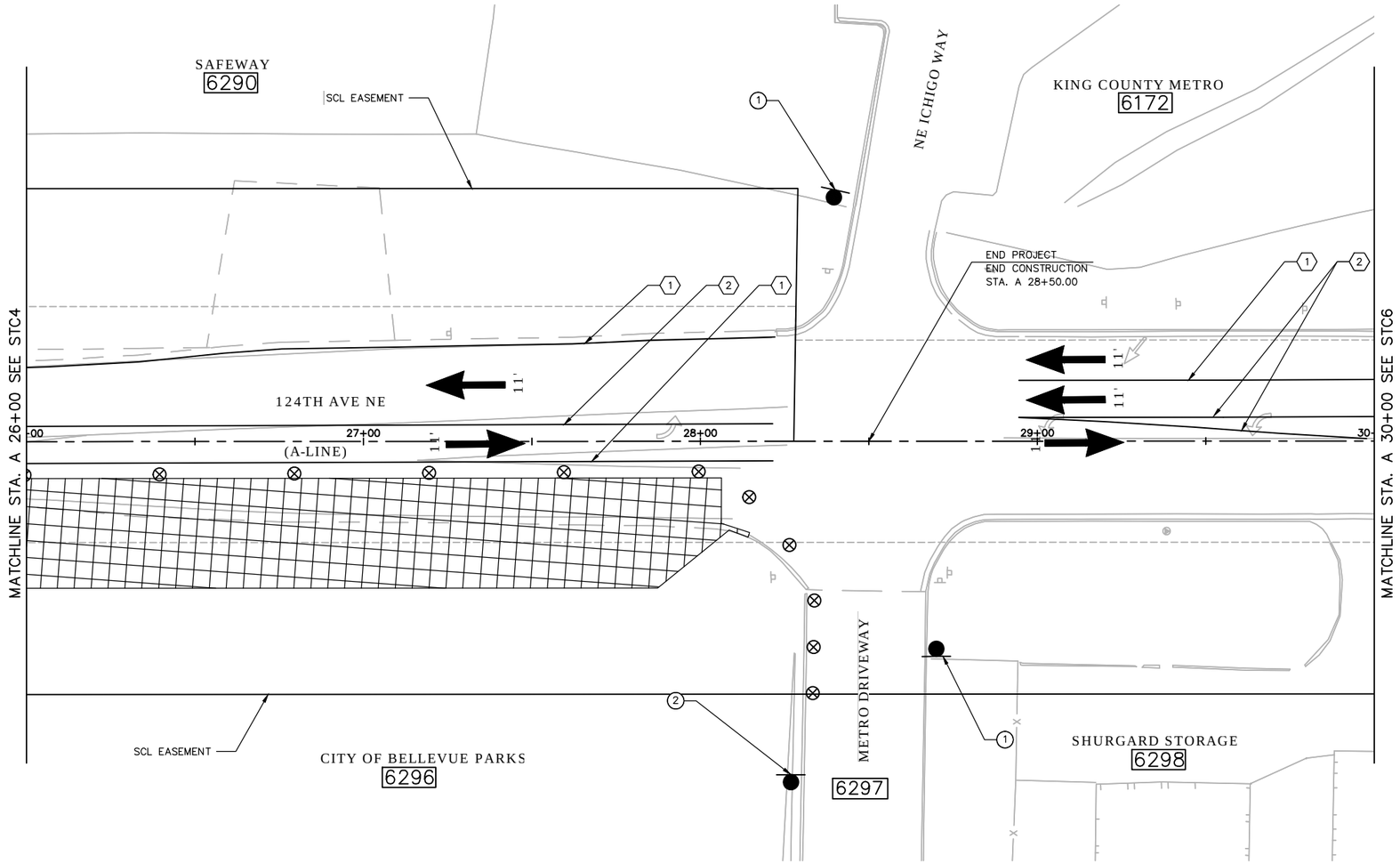

(1)

(2)

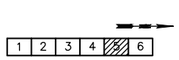

KEY PLAN

STAGE 1

20 10 0 20 40

SCALE

NO.	DATE	BY	APPR.	REVISIONS

Approved By

TRANSPORTATION DESIGN MANAGER — DATE
M. ARAKELYAN
PROJECT MANAGER — DATE

S. HAYS
DESIGNED BY — DATE
J. FRYE
DRAWN BY — DATE
G. ROYCROFT
CHECKED BY — DATE

City of Bellevue
TRANSPORTATION DEPARTMENT

HDR

124th Ave NE - NE Spring Blvd to NE Ichigo Way

STAGING & TRAFFIC CONTROL PLANS
STA. A 26+00 TO STA. A 30+00

SHEET NAME STC5

SHT 16 OF 198

SECTION 28, T. 25 N., R5E., W.M.
KING COUNTY

95% SUBMITTAL NOT FOR CONSTRUCTION

GENERAL NOTES:

1. SEE SHEET STCG1 FOR LEGEND, GENERAL NOTES, STAGING SEQUENCE NOTES, BUFFER DATA TABLE, SIGN SPACING TABLE, MINIMUM TAPER LENGTH TABLE AND CHANNELIZATION DEVICE SPACING TABLE.
2. WORK WITHIN SCL EASEMENT AREA NEEDS TO COMPLY WITH SCL STANDARDS.
3. CHANNELIZATION OUTSIDE OF THE PROJECT LIMITS IS TO BE RETURNED TO EXISTING CONDITIONS AFTER CONSTRUCTION IS COMPLETE.

CONSTRUCTION NOTES:

1. INSTALL WHITE EDGE LINE PER WSDOT STD. PLAN M-20.10-02
2. INSTALL YELLOW DOUBLE CENTERLINE LINE PER WSDOT STD. PLAN M-20.10-02

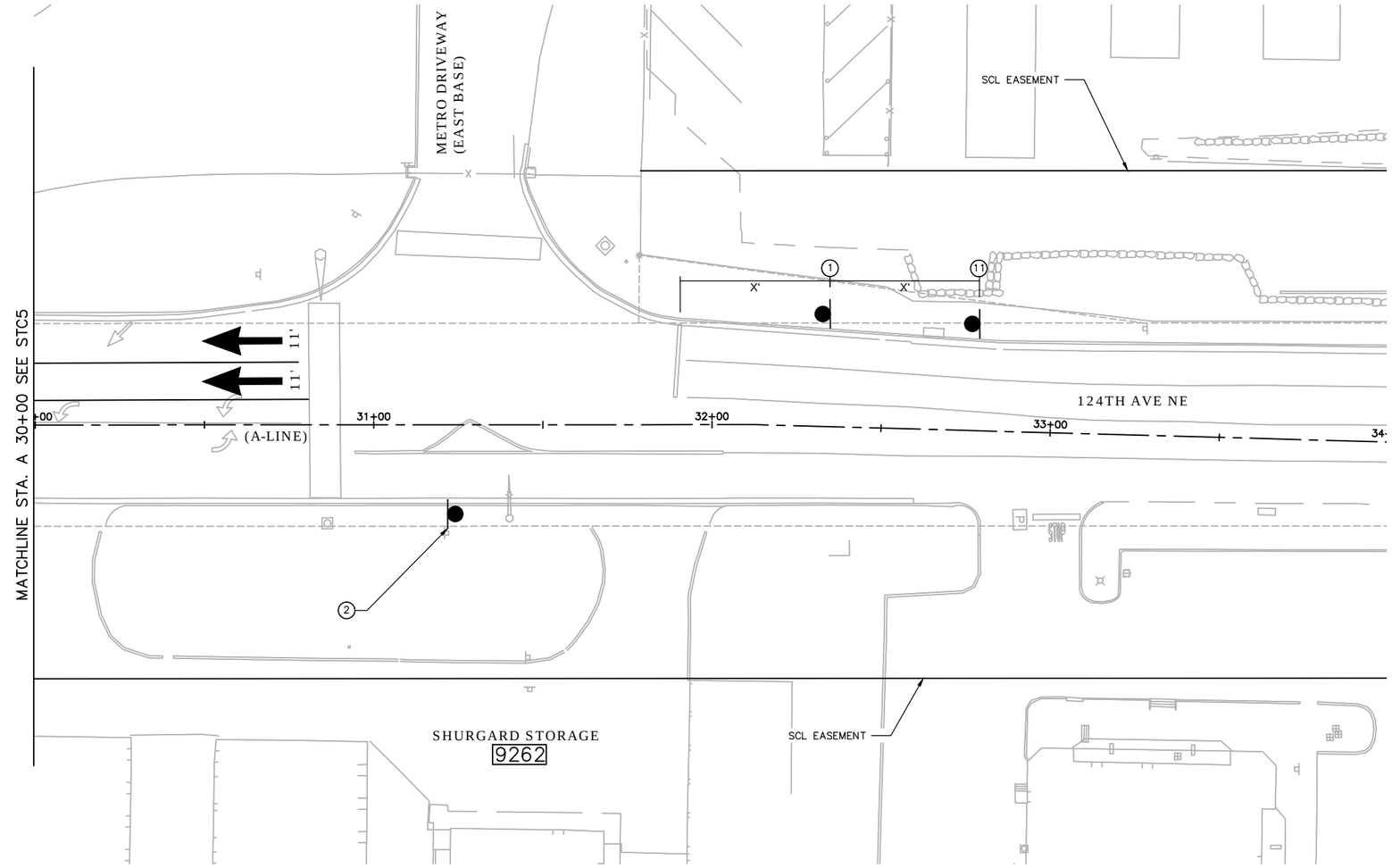

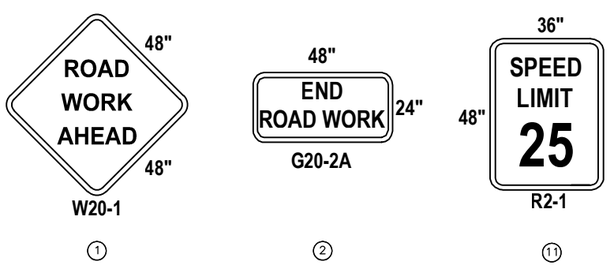

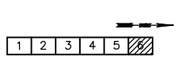

KEY PLAN

STAGE 1

20 10 0 20 40

SCALE

NO.	DATE	BY	APPR.	REVISIONS

Approved By

TRANSPORTATION DESIGN MANAGER — DATE
M. ARAKELYAN
PROJECT MANAGER — DATE

S. HAYS — DESIGNED BY — DATE
J. FRYE — DRAWN BY — DATE
G. ROYCROFT — CHECKED BY — DATE

City of Bellevue
TRANSPORTATION DEPARTMENT

HDR

124th Ave NE - NE Spring Blvd to NE Ichigo Way

STAGING & TRAFFIC CONTROL PLANS
STA. A 30+00 TO END

SHEET NAME STC6

SHT 17 OF 198

GENERAL NOTES:

1. SEE SHEET STCG1 FOR LEGEND, GENERAL NOTES, STAGING SEQUENCE NOTES, BUFFER DATA TABLE, SIGN SPACING TABLE, MINIMUM TAPER LENGTH TABLE AND CHANNELIZATION DEVICE SPACING TABLE.
2. WORK WITHIN SCL EASEMENT AREA NEEDS TO COMPLY WITH SCL STANDARDS.

SECTION 28, T. 25 N., R5E., W.M.
KING COUNTY

95% SUBMITTAL NOT FOR CONSTRUCTION

CONSTRUCTION NOTES:

1. INSTALL WHITE EDGE LINE PER WSDOT STD. PLAN M-20.10-02
2. INSTALL YELLOW DOUBLE CENTERLINE LINE PER WSDOT STD. PLAN M-20.10-02

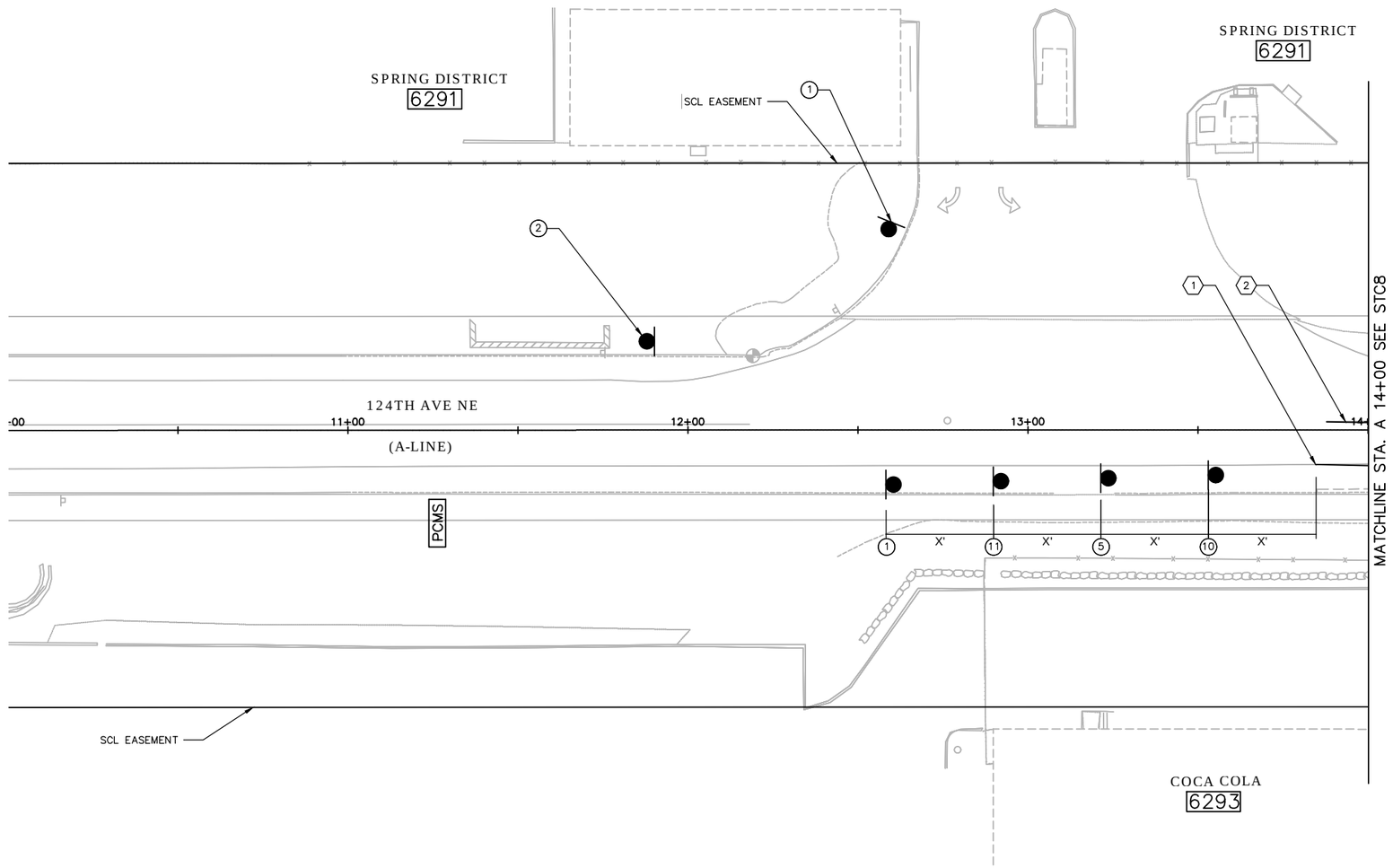

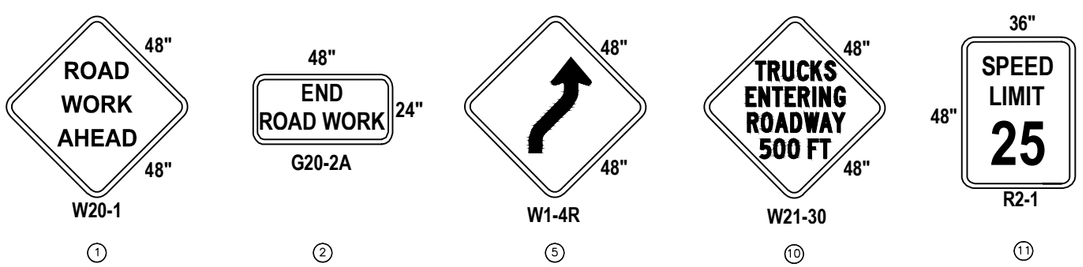

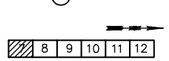

KEY PLAN

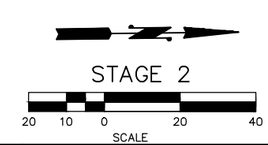

NO.	DATE	BY	APPR.	REVISIONS

Approved By

TRANSPORTATION DESIGN MANAGER — DATE
M. ARAKELYAN
PROJECT MANAGER — DATE

S. HAYS
DESIGNED BY — DATE
J. FRYE
DRAWN BY — DATE
G. ROYCROFT
CHECKED BY — DATE

City of Bellevue
TRANSPORTATION DEPARTMENT

HDR

124th Ave NE - NE Spring Blvd to NE Ichigo Way

STAGING & TRAFFIC CONTROL PLANS
BEGIN TO STA. A 14+00

SHEET NAME STC7

SHT 18 OF 198

GENERAL NOTES:

1. SEE SHEET STCG1 FOR LEGEND, GENERAL NOTES, STAGING SEQUENCE NOTES, BUFFER DATA TABLE, SIGN SPACING TABLE, MINIMUM TAPER LENGTH TABLE AND CHANNELIZATION DEVICE SPACING TABLE.
2. WORK WITHIN SCL EASEMENT AREA NEEDS TO COMPLY WITH SCL STANDARDS.

SECTION 28, T. 25 N., R5E., W.M.
KING COUNTY

95% SUBMITTAL NOT FOR CONSTRUCTION

CONSTRUCTION NOTES:

1. INSTALL WHITE EDGE LINE PER WSDOT STD. PLAN M-20.10-02
2. INSTALL YELLOW DOUBLE CENTERLINE LINE PER WSDOT STD. PLAN M-20.10-02

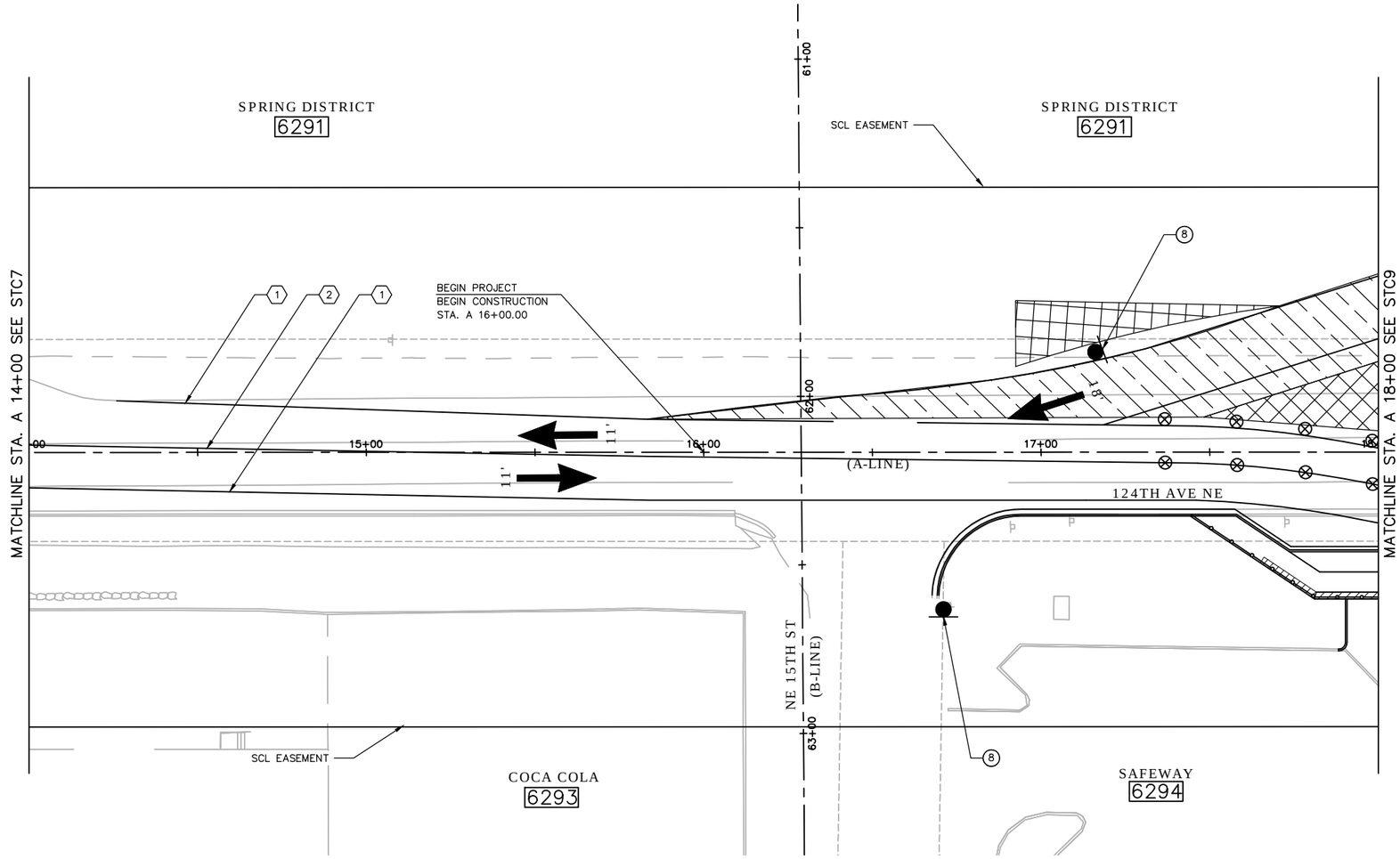

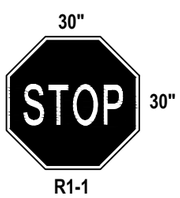

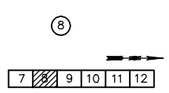

KEY PLAN

STAGE 2

20 10 0 20 40

SCALE

NO.	DATE	BY	APPR.	REVISIONS

Approved By

TRANSPORTATION DESIGN MANAGER — DATE
M. ARAKELYAN
PROJECT MANAGER — DATE

S. HAYS
DESIGNED BY — DATE
J. FRYE
DRAWN BY — DATE
G. ROYCROFT
CHECKED BY — DATE

City of Bellevue
TRANSPORTATION DEPARTMENT

124th Ave NE - NE Spring Blvd to NE Ichigo Way

STAGING & TRAFFIC CONTROL PLANS
STA. A 14+00 TO STA. A 18+00

SHEET NAME STC8

GENERAL NOTES:

1. SEE SHEET STCG1 FOR LEGEND, GENERAL NOTES, STAGING SEQUENCE NOTES, BUFFER DATA TABLE, SIGN SPACING TABLE, MINIMUM TAPER LENGTH TABLE AND CHANNELIZATION DEVICE SPACING TABLE.
2. WORK WITHIN SCL EASEMENT AREA NEEDS TO COMPLY WITH SCL STANDARDS.

SECTION 28, T. 25 N., R5E., W.M.
KING COUNTY

95% SUBMITTAL NOT FOR CONSTRUCTION

CONSTRUCTION NOTES:

1. INSTALL WHITE EDGE LINE PER WSDOT STD. PLAN M-20.10-02
2. INSTALL YELLOW DOUBLE CENTERLINE LINE PER WSDOT STD. PLAN M-20.10-02
3. TEMPORARY CONCRETE BARRIER TYPE 2 PER WSDOT STD. PLAN C-8

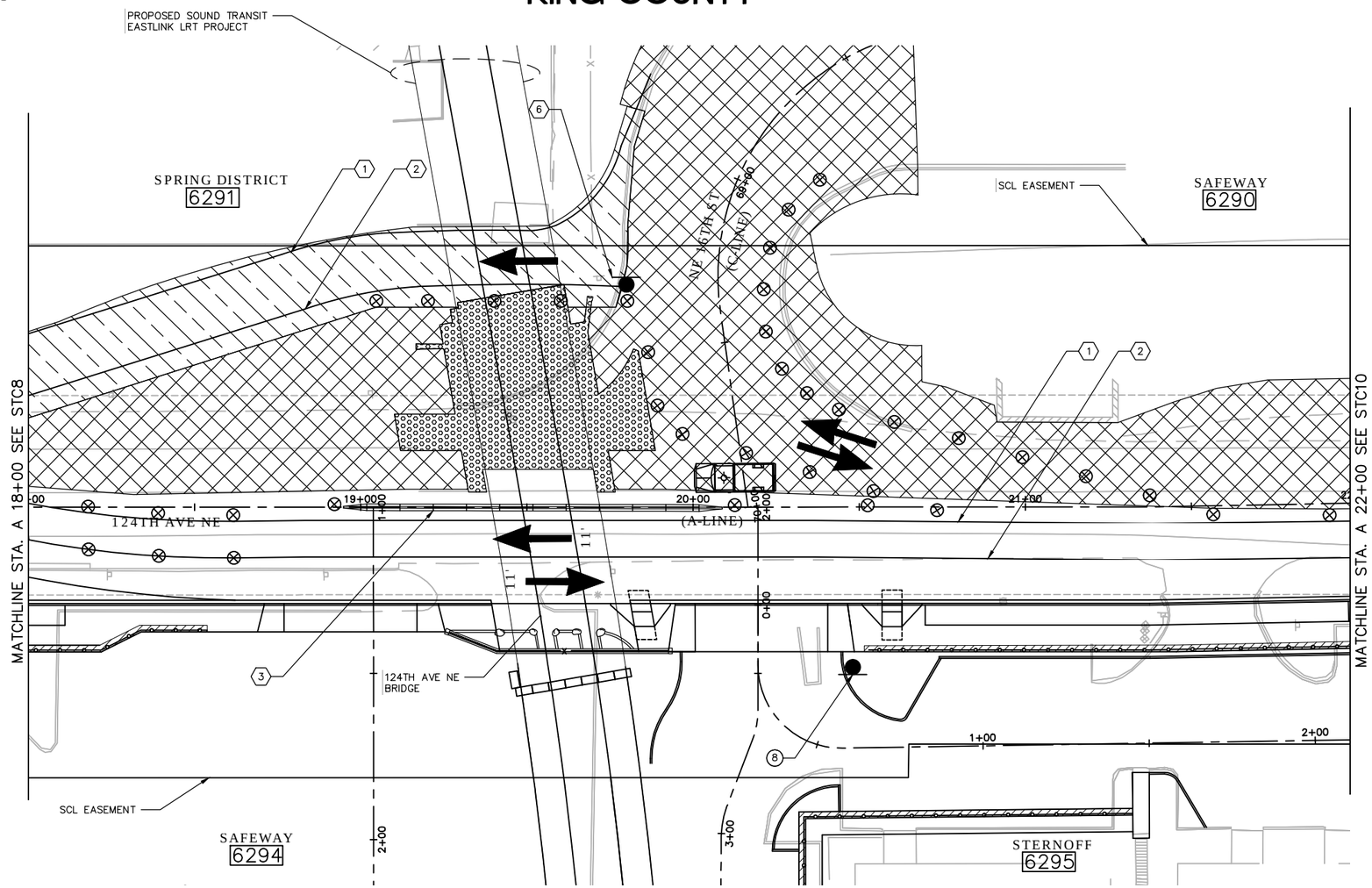

W1-6R

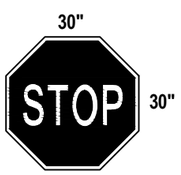

R1-1

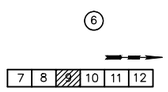

KEY PLAN

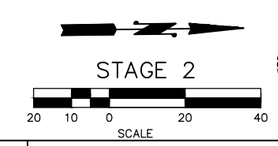

NO.	DATE	BY	APPR.	REVISIONS

Approved By

TRANSPORTATION DESIGN MANAGER — DATE
M. ARAKELYAN
PROJECT MANAGER — DATE

S. HAYS — DESIGNED BY — DATE
J. FRYE — DRAWN BY — DATE
G. ROYCROFT — CHECKED BY — DATE

City of Bellevue
TRANSPORTATION DEPARTMENT

HDR

124th Ave NE - NE Spring Blvd to NE Ichigo Way

STAGING & TRAFFIC CONTROL PLANS
STA. A 18+00 TO STA. A 22+00

SHEET NAME STC9

SHT 20 OF 198

GENERAL NOTES:

1. SEE SHEET STCG1 FOR LEGEND, GENERAL NOTES, STAGING SEQUENCE NOTES, BUFFER DATA TABLE, SIGN SPACING TABLE, MINIMUM TAPER LENGTH TABLE AND CHANNELIZATION DEVICE SPACING TABLE.
2. WORK WITHIN SCL EASEMENT AREA NEEDS TO COMPLY WITH SCL STANDARDS.

SECTION 28, T. 25 N., R5E., W.M.
KING COUNTY

95% SUBMITTAL NOT FOR CONSTRUCTION

CONSTRUCTION NOTES:

(1) INSTALL WHITE EDGE LINE PER WSDOT STD. PLAN M-20.10-02

(2) INSTALL YELLOW DOUBLE CENTERLINE LINE PER WSDOT STD. PLAN M-20.10-02

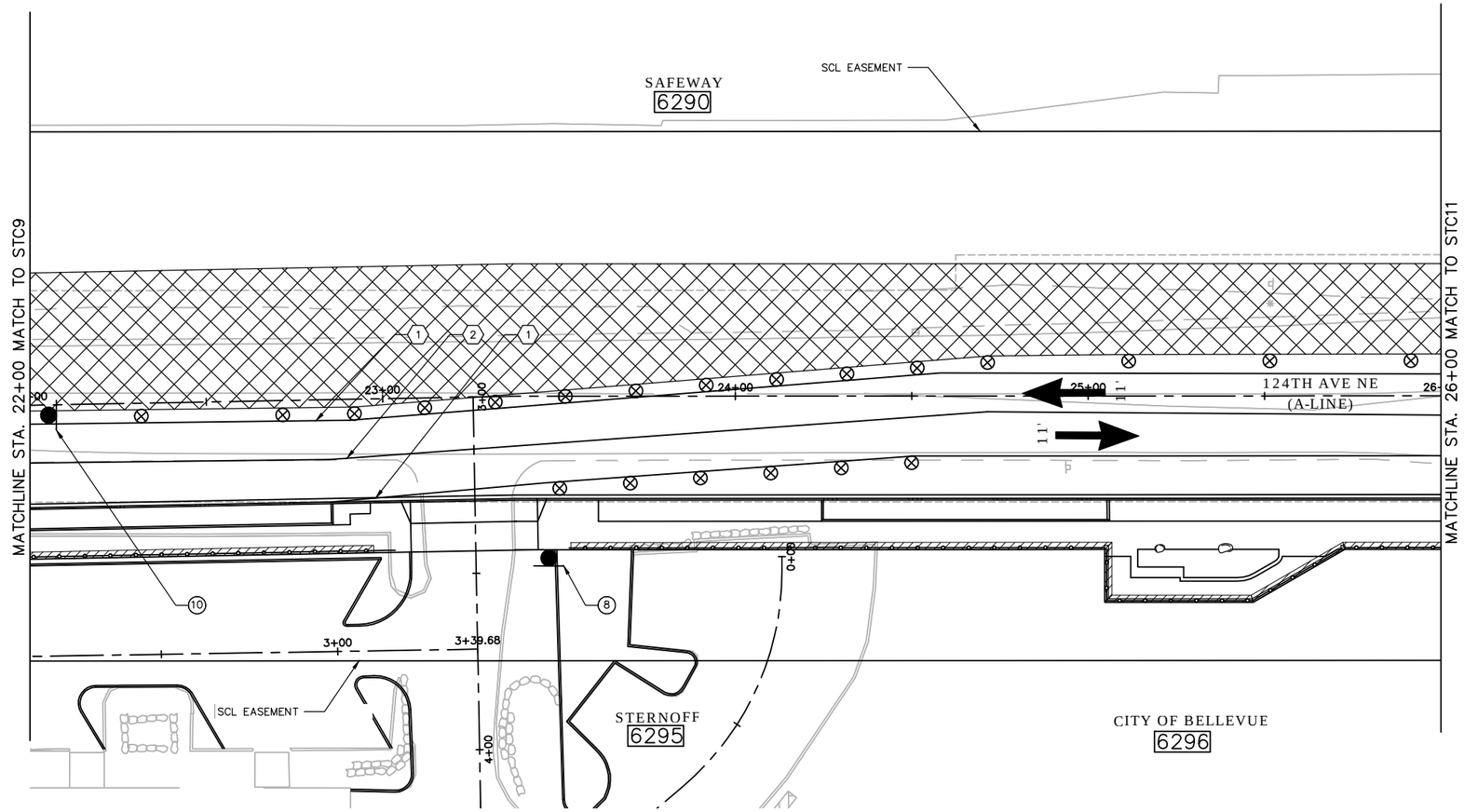

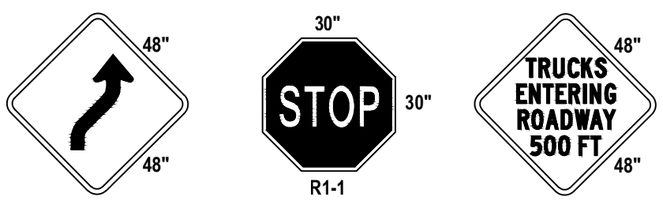

W1-4R ⑤ | R1-1 ⑧ | W21-30 ⑩

KEY PLAN

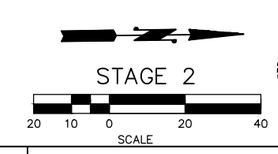

NO.	DATE	BY	APPR.	REVISIONS

Approved By

TRANSPORTATION DESIGN MANAGER — DATE
M. ARAKELYAN
PROJECT MANAGER — DATE

S. HAYS — DESIGNED BY — DATE
J. FRYE — DRAWN BY — DATE
G. ROYCROFT — CHECKED BY — DATE

City of Bellevue
TRANSPORTATION DEPARTMENT

HDR

124th Ave NE - NE Spring Blvd to NE Ichigo Way

STAGING & TRAFFIC CONTROL PLANS
STA. A 22+00 TO STA. A 26+00

SHEET NAME STC10

SHT 21 OF 198

SECTION 28, T. 25 N., R5E., W.M.
KING COUNTY

95% SUBMITTAL NOT FOR CONSTRUCTION

GENERAL NOTES:

1. SEE SHEET STCG1 FOR LEGEND, GENERAL NOTES, STAGING SEQUENCE NOTES, BUFFER DATA TABLE, SIGN SPACING TABLE, MINIMUM TAPER LENGTH TABLE AND CHANNELIZATION DEVICE SPACING TABLE.
2. WORK WITHIN SCL EASEMENT AREA NEEDS TO COMPLY WITH SCL STANDARDS.
3. CHANNELIZATION OUTSIDE OF THE PROJECT LIMITS IS TO BE RETURNED TO EXISTING CONDITIONS AFTER CONSTRUCTION IS COMPLETE.

CONSTRUCTION NOTES:

(1) INSTALL WHITE EDGE LINE PER WSDOT STD. PLAN M-20.10-02

(2) INSTALL YELLOW DOUBLE CENTERLINE LINE PER WSDOT STD. PLAN M-20.10-02

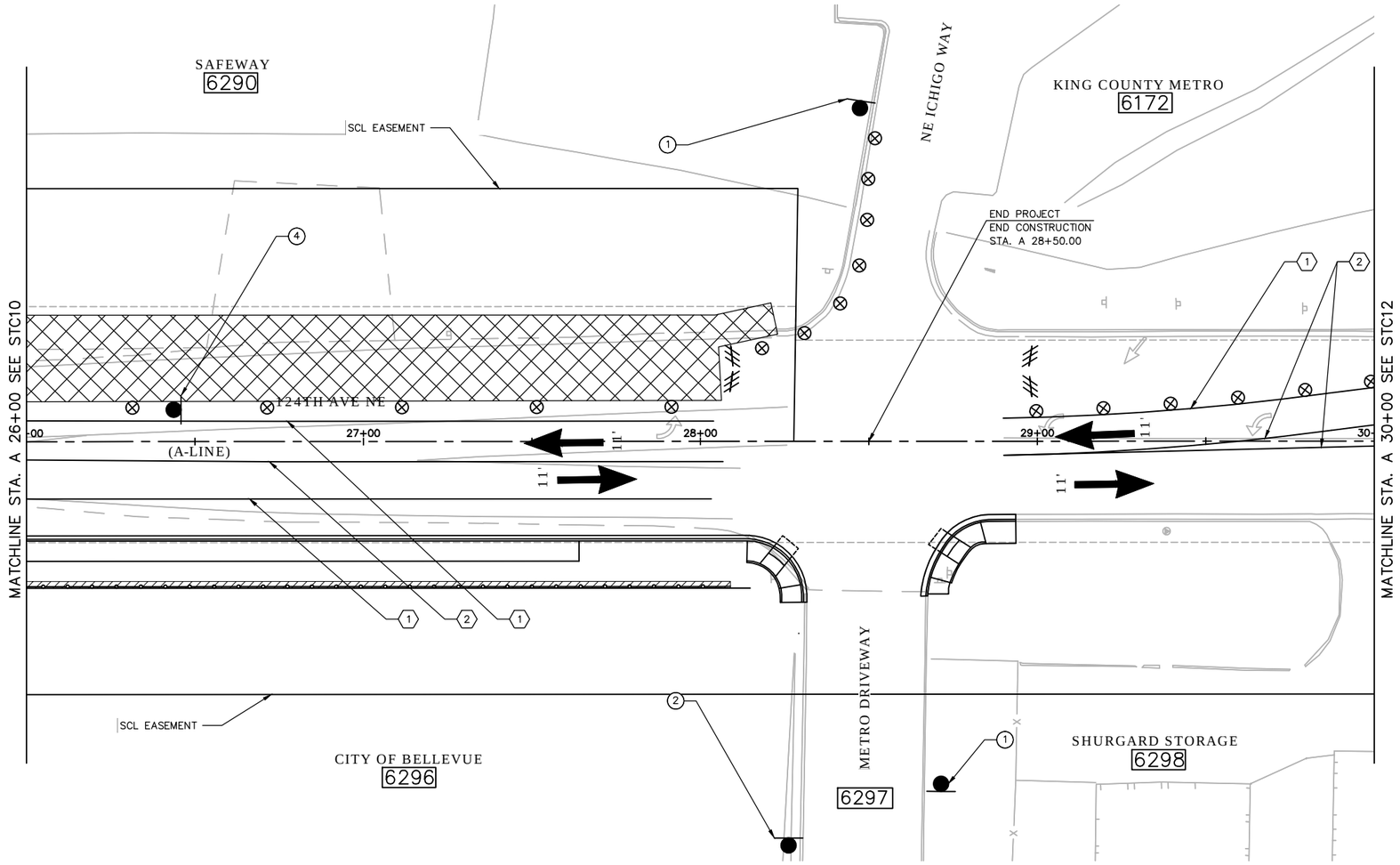

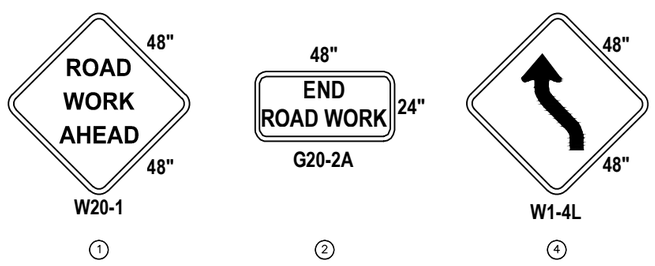

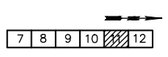

KEY PLAN

NO.	DATE	BY	APPR.	REVISIONS

Approved By

TRANSPORTATION DESIGN MANAGER — DATE
M. ARAKELYAN
PROJECT MANAGER — DATE

S. HAYS — DESIGNED BY — DATE
J. FRYE — DRAWN BY — DATE
G. ROYCROFT — CHECKED BY — DATE

City of Bellevue
TRANSPORTATION DEPARTMENT

HDR

124th Ave NE - NE Spring Blvd to NE Ichigo Way

STAGING & TRAFFIC CONTROL PLANS
STA. A 26+00 TO STA. A 30+00

SHEET NAME STC11

SHT 22 OF 198

SECTION 28, T. 25 N., R5E., W.M.
KING COUNTY

95% SUBMITTAL NOT FOR CONSTRUCTION

GENERAL NOTES:

1. SEE SHEET STCG1 FOR LEGEND, GENERAL NOTES, STAGING SEQUENCE NOTES, BUFFER DATA TABLE, SIGN SPACING TABLE, MINIMUM TAPER LENGTH TABLE AND CHANNELIZATION DEVICE SPACING TABLE.
2. WORK WITHIN SCL EASEMENT AREA NEEDS TO COMPLY WITH SCL STANDARDS.
3. CHANNELIZATION OUTSIDE OF THE PROJECT LIMITS IS TO BE RETURNED TO EXISTING CONDITIONS AFTER CONSTRUCTION IS COMPLETE.

CONSTRUCTION NOTES:

1. INSTALL WHITE EDGE LINE PER WSDOT STD. PLAN M-20.10-02
2. INSTALL YELLOW DOUBLE CENTERLINE LINE PER WSDOT STD. PLAN M-20.10-02
4. PAINTED STOP LINE PER WSDOT STD. PLAN M-24.60-03

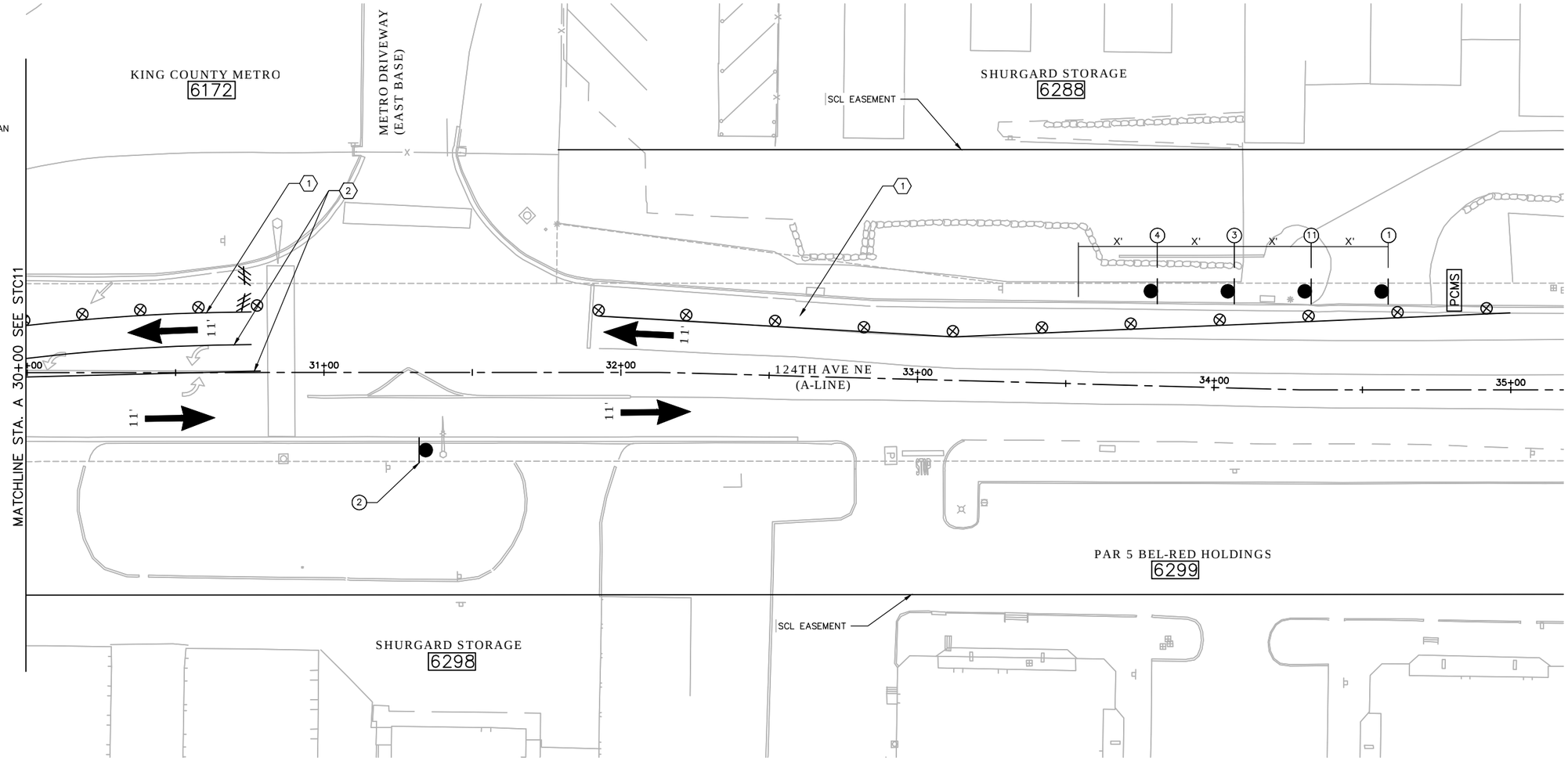

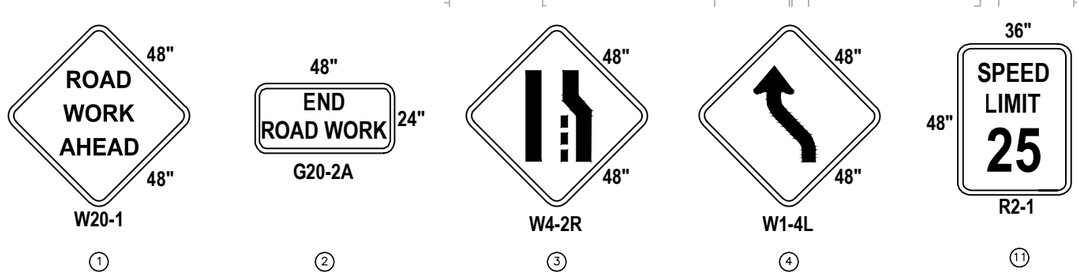

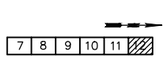

KEY PLAN

NO.	DATE	BY	APPR.	REVISIONS

Approved By

TRANSPORTATION DESIGN MANAGER — DATE
M. ARAKELYAN
PROJECT MANAGER — DATE

S. HAYS — DESIGNED BY — DATE
J. FRYE — DRAWN BY — DATE
G. ROYCROFT — CHECKED BY — DATE

City of Bellevue
TRANSPORTATION DEPARTMENT

HDR

124th Ave NE - NE Spring Blvd to NE Ichigo Way

STAGING & TRAFFIC CONTROL PLANS
STA. A 30+00 TO END

SHEET NAME STC12

SHT 23 OF 198

GENERAL NOTES:

1. SEE SHEET STCG1 FOR LEGEND, GENERAL NOTES, STAGING SEQUENCE NOTES, BUFFER DATA TABLE, SIGN SPACING TABLE, MINIMUM TAPER LENGTH TABLE AND CHANNELIZATION DEVICE SPACING TABLE.
2. WORK WITHIN SCL EASEMENT AREA NEEDS TO COMPLY WITH SCL STANDARDS.

SECTION 28, T. 25 N., R5E., W.M.
KING COUNTY

95% SUBMITTAL NOT FOR CONSTRUCTION

CONSTRUCTION NOTES:

1. INSTALL WHITE EDGE LINE PER WSDOT STD. PLAN M-20.10-02
2. INSTALL YELLOW DOUBLE CENTERLINE LINE PER WSDOT STD. PLAN M-20.10-02

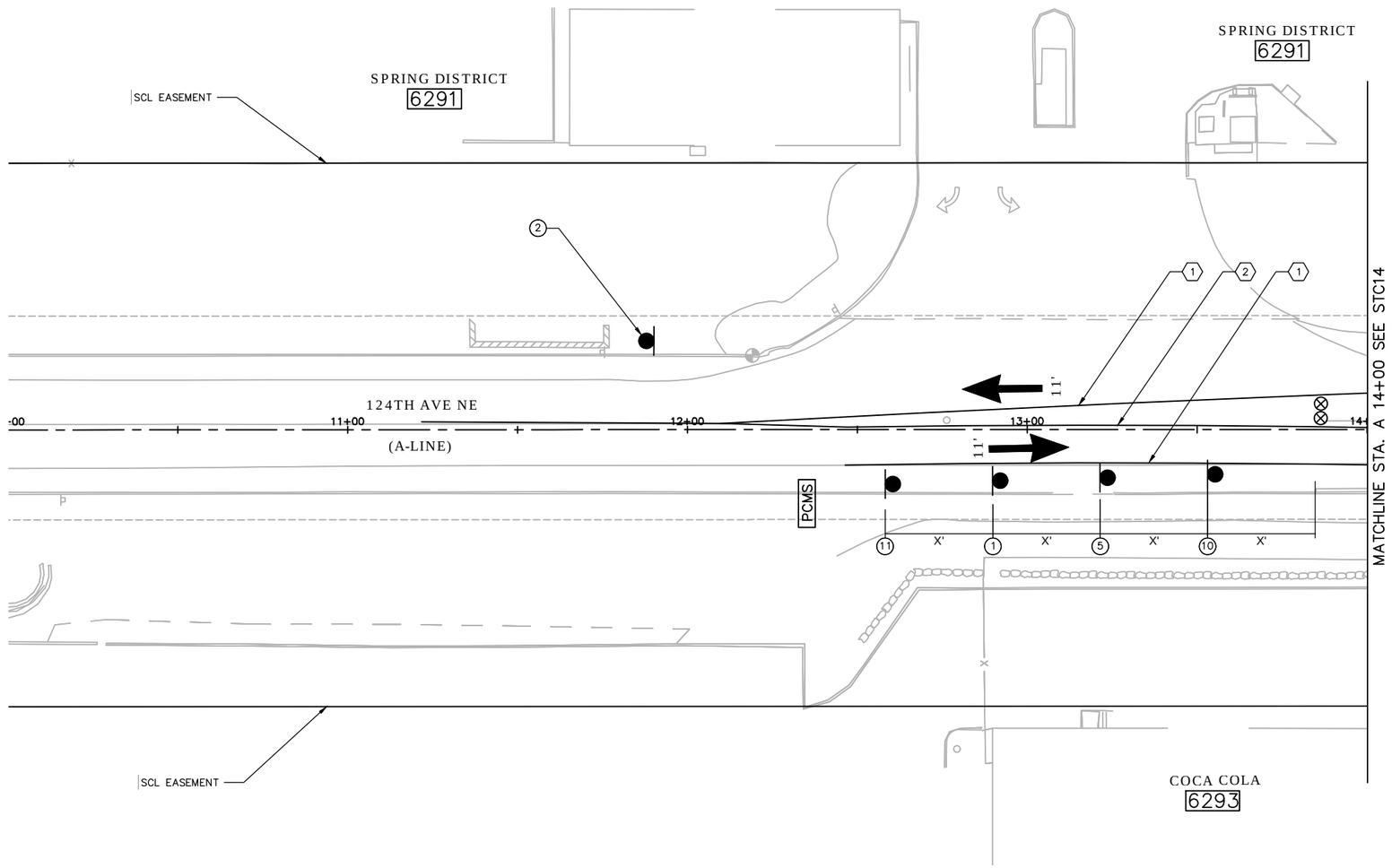

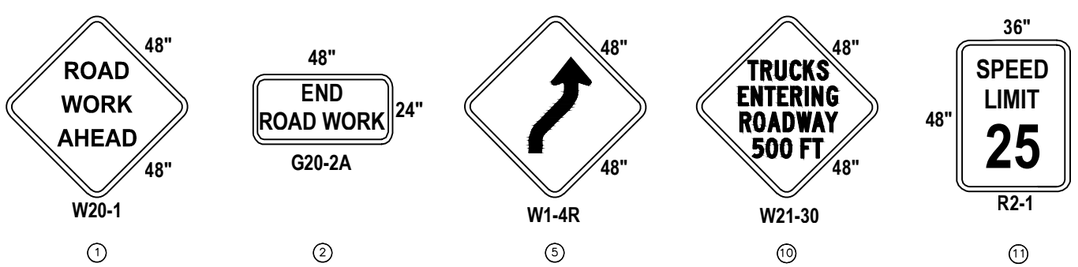

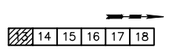

KEY PLAN

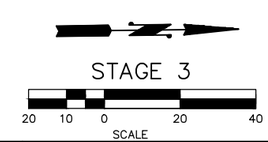

NO.	DATE	BY	APPR.	REVISIONS

Approved By

TRANSPORTATION DESIGN MANAGER — DATE
M. ARAKELYAN
PROJECT MANAGER — DATE

S. HAYS
DESIGNED BY — DATE
J. FRYE
DRAWN BY — DATE
G. ROYCROFT
CHECKED BY — DATE

City of Bellevue
TRANSPORTATION DEPARTMENT

HDR

124th Ave NE - NE Spring Blvd to NE Ichigo Way

STAGING & TRAFFIC CONTROL PLANS
BEGIN TO STA. A 14+00

SHEET NAME STC13

SHT 24 OF 198

GENERAL NOTES:

1. SEE SHEET STCG1 FOR LEGEND, GENERAL NOTES, STAGING SEQUENCE NOTES, BUFFER DATA TABLE, SIGN SPACING TABLE, MINIMUM TAPER LENGTH TABLE AND CHANNELIZATION DEVICE SPACING TABLE.
2. WORK WITHIN SCL EASEMENT AREA NEEDS TO COMPLY WITH SCL STANDARDS.

SECTION 28, T. 25 N., R5E., W.M.
KING COUNTY

95% SUBMITTAL NOT FOR CONSTRUCTION

CONSTRUCTION NOTES:

1. INSTALL WHITE EDGE LINE PER WSDOT STD. PLAN M-20.10-02
2. INSTALL YELLOW DOUBLE CENTERLINE LINE PER WSDOT STD. PLAN M-20.10-02

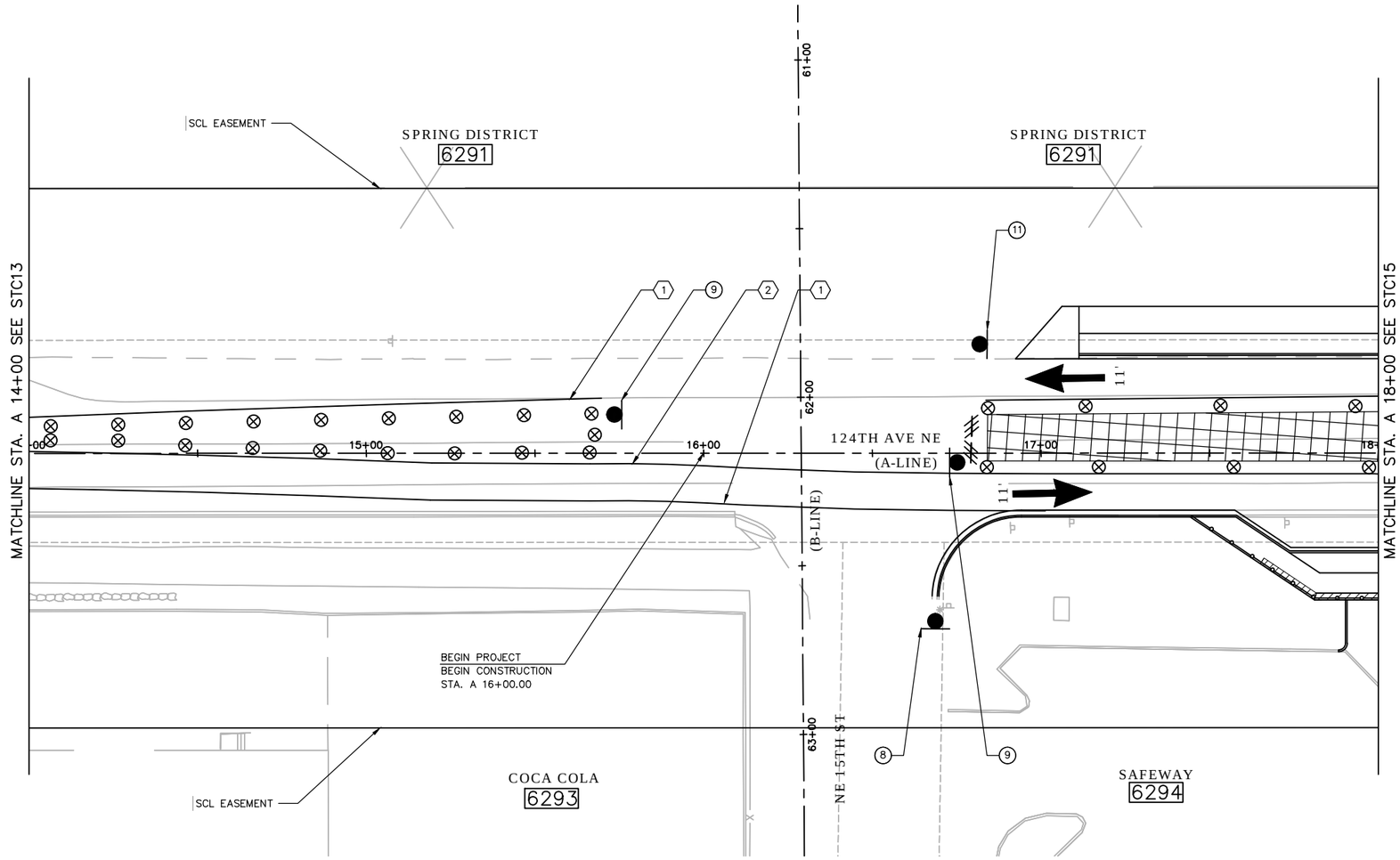

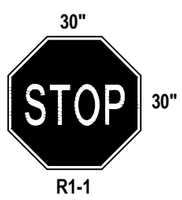

8

9

11

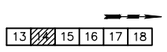

KEY PLAN

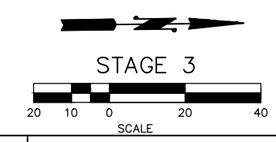

NO.	DATE	BY	APPR.	REVISIONS

Approved By

TRANSPORTATION DESIGN MANAGER — DATE
M. ARAKELYAN
PROJECT MANAGER — DATE

S. HAYS — DESIGNED BY — DATE
J. FRYE — DRAWN BY — DATE
G. ROYCROFT — CHECKED BY — DATE

City of Bellevue
TRANSPORTATION DEPARTMENT

HDR

124th Ave NE - NE Spring Blvd to NE Ichigo Way

STAGING & TRAFFIC CONTROL PLANS
STA. A 14+00 TO STA. A 18+00

SHEET NAME STC14

SHT 25 OF 198

95% SUBMITTAL NOT FOR CONSTRUCTION

SECTION 28, T. 25 N., R5E., W.M.
KING COUNTY

GENERAL NOTES:

1. SEE SHEET STCG1 FOR LEGEND, GENERAL NOTES, STAGING SEQUENCE NOTES, BUFFER DATA TABLE, SIGN SPACING TABLE, MINIMUM TAPER LENGTH TABLE AND CHANNELIZATION DEVICE SPACING TABLE.
2. WORK WITHIN SCL EASEMENT AREA NEEDS TO COMPLY WITH SCL STANDARDS.

CONSTRUCTION NOTES:

(1) INSTALL WHITE EDGE LINE PER WSDOT STD. PLAN M-20.10-02

(2) INSTALL YELLOW DOUBLE CENTERLINE LINE PER WSDOT STD. PLAN M-20.10-02

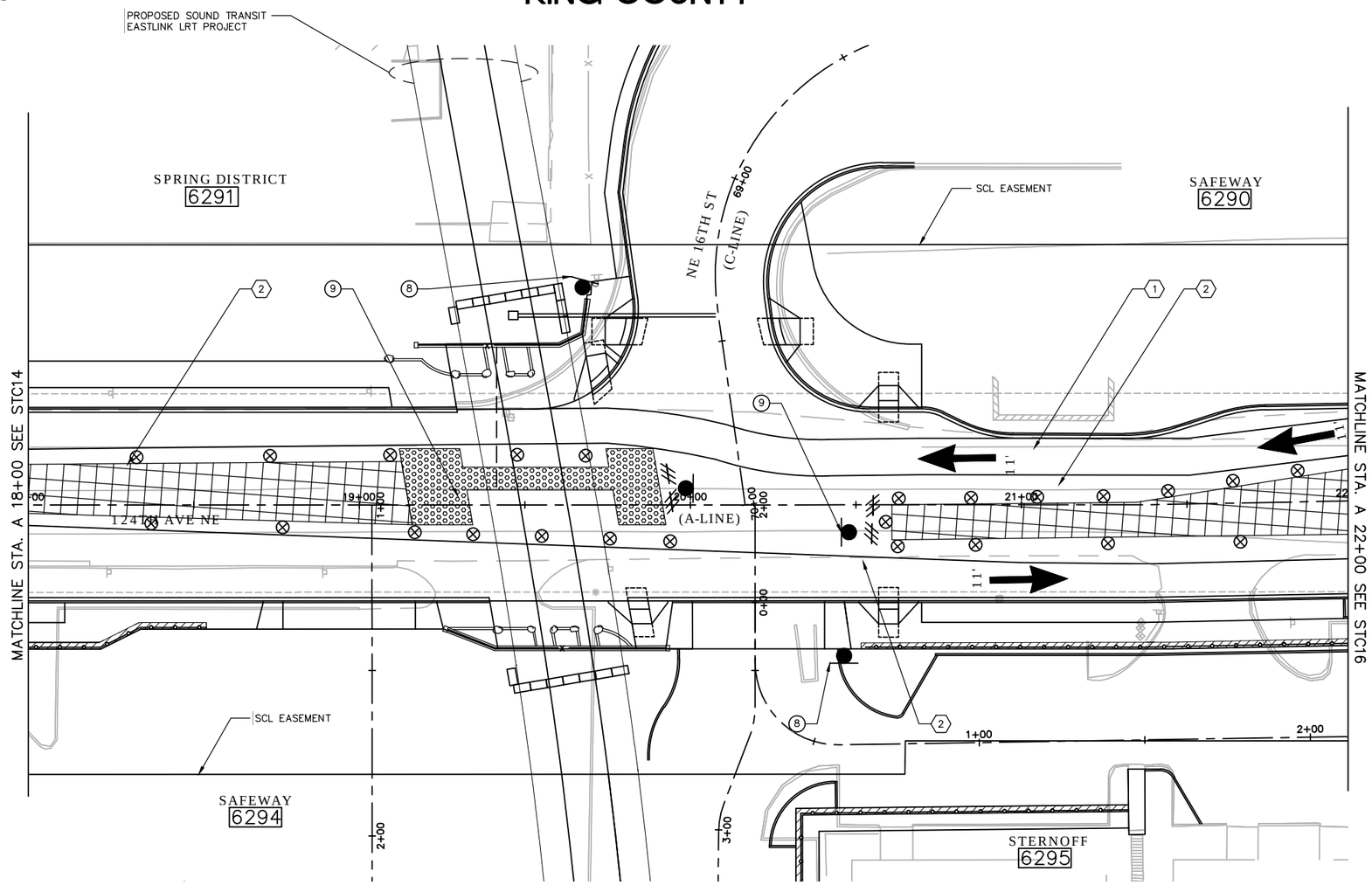

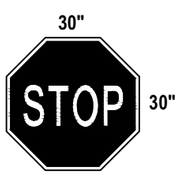

R1-1

(8)

R4-7A

(9)

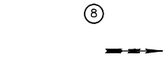

KEY PLAN

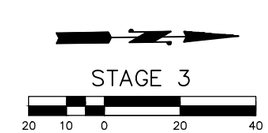

NO.	DATE	BY	APPR.	REVISIONS

Approved By

TRANSPORTATION DESIGN MANAGER — DATE
M. ARAKELYAN
PROJECT MANAGER — DATE

S. HAYS — DESIGNED BY — DATE
J. FRYE — DRAWN BY — DATE
G. ROYCROFT — CHECKED BY — DATE

City of Bellevue
TRANSPORTATION DEPARTMENT

HDR

124th Ave NE - NE Spring Blvd to NE Ichigo Way

STAGING & TRAFFIC CONTROL PLANS
STA. A 18+00 TO STA. A 22+00

SHEET NAME STC15

SHT 26 OF 198

GENERAL NOTES:

1. SEE SHEET STCG1 FOR LEGEND, GENERAL NOTES, STAGING SEQUENCE NOTES, BUFFER DATA TABLE, SIGN SPACING TABLE, MINIMUM TAPER LENGTH TABLE AND CHANNELIZATION DEVICE SPACING TABLE.
2. WORK WITHIN SCL EASEMENT AREA NEEDS TO COMPLY WITH SCL STANDARDS.

SECTION 28, T. 25 N., R5E., W.M.
KING COUNTY

95% SUBMITTAL NOT FOR CONSTRUCTION

CONSTRUCTION NOTES:

1. INSTALL WHITE EDGE LINE PER WSDOT STD. PLAN M-20.10-02
2. INSTALL YELLOW DOUBLE CENTERLINE LINE PER WSDOT STD. PLAN M-20.10-02

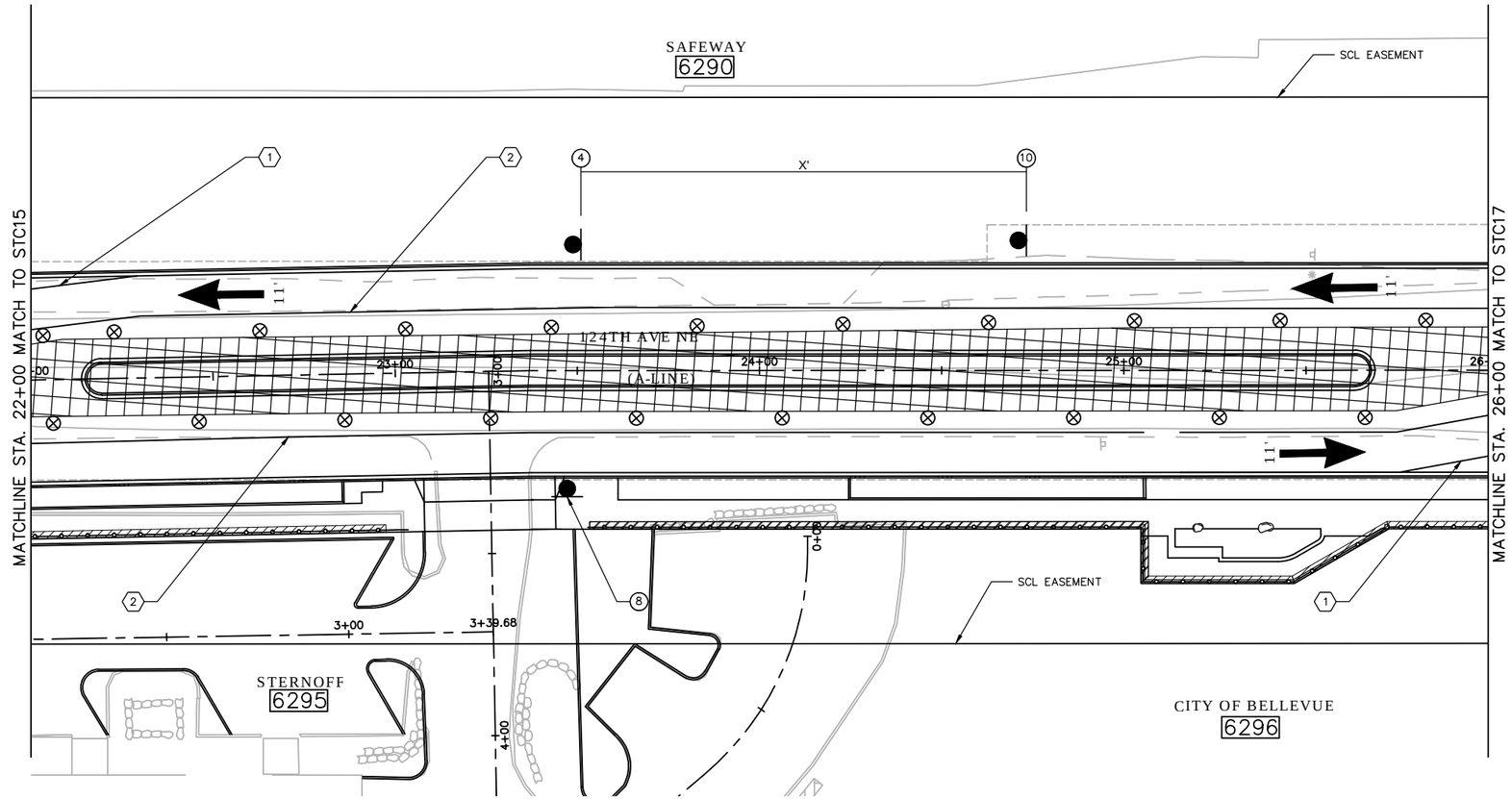

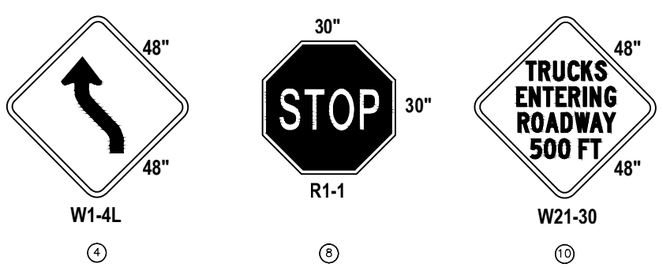

KEY PLAN

STAGE 3

20 10 0 20 40

SCALE

NO.	DATE	BY	APPR.	REVISIONS

Approved By

TRANSPORTATION DESIGN MANAGER — DATE
M. ARAKELYAN
PROJECT MANAGER — DATE

S. HAYS — DESIGNED BY — DATE
J. FRYE — DRAWN BY — DATE
G. ROYCROFT — CHECKED BY — DATE

City of Bellevue
TRANSPORTATION DEPARTMENT

HDR

124th Ave NE - NE Spring Blvd to NE Ichigo Way

STAGING & TRAFFIC CONTROL PLANS
STA. A 22+00 TO STA. A 26+00

SHEET NAME STC16

SHT 27 OF 198

95% SUBMITTAL NOT FOR CONSTRUCTION

SECTION 28, T. 25 N., R5E., W.M.
KING COUNTY

GENERAL NOTES:

1. SEE SHEET STCG1 FOR LEGEND, GENERAL NOTES, STAGING SEQUENCE NOTES, BUFFER DATA TABLE, SIGN SPACING TABLE, MINIMUM TAPER LENGTH TABLE AND CHANNELIZATION DEVICE SPACING TABLE.
2. WORK WITHIN SCL EASEMENT AREA NEEDS TO COMPLY WITH SCL STANDARDS.
3. CHANNELIZATION OUTSIDE OF THE PROJECT LIMITS IS TO BE RETURNED TO EXISTING CONDITIONS AFTER CONSTRUCTION IS COMPLETE.

CONSTRUCTION NOTES:

(1) INSTALL WHITE EDGE LINE PER WSDOT STD. PLAN M-20.10-02

(2) INSTALL YELLOW DOUBLE CENTERLINE LINE PER WSDOT STD. PLAN M-20.10-02

(4) PAINTED STOP LINE PER WSDOT STD. PLAN M-24.60-03

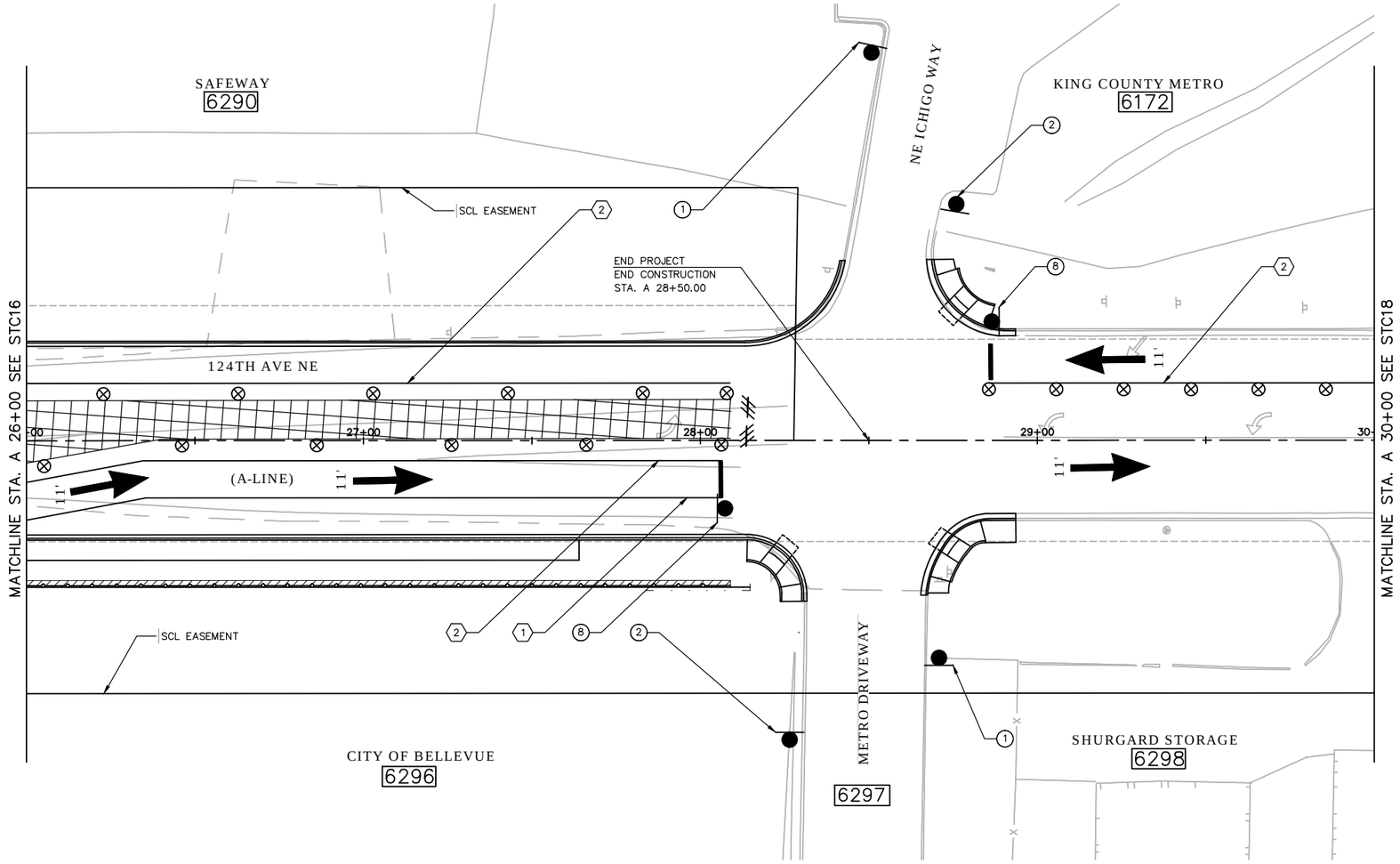

(1)

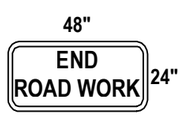

(2)

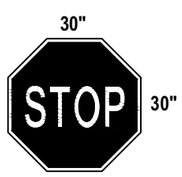

(8)

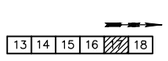

KEY PLAN

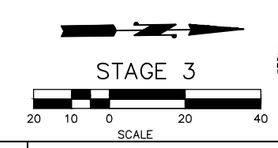

NO.	DATE	BY	APPR.	REVISIONS

Approved By

TRANSPORTATION DESIGN MANAGER — DATE
M. ARAKELYAN
PROJECT MANAGER — DATE

S. HAYS — DESIGNED BY — DATE
J. FRYE — DRAWN BY — DATE
G. ROYCROFT — CHECKED BY — DATE

City of Bellevue
TRANSPORTATION DEPARTMENT

HDR

124th Ave NE - NE Spring Blvd to NE Ichigo Way

STAGING & TRAFFIC CONTROL PLANS
STA. A 26+00 TO STA. A 30+00

SHEET NAME STC17

SHT 28 OF 198

SECTION 28, T. 25 N., R5E., W.M.
KING COUNTY

95% SUBMITTAL NOT FOR CONSTRUCTION

GENERAL NOTES:

1. SEE SHEET STCG1 FOR LEGEND, GENERAL NOTES, STAGING SEQUENCE NOTES, BUFFER DATA TABLE, SIGN SPACING TABLE, MINIMUM TAPER LENGTH TABLE AND CHANNELIZATION DEVICE SPACING TABLE.
2. WORK WITHIN SCL EASEMENT AREA NEEDS TO COMPLY WITH SCL STANDARDS.
3. CHANNELIZATION OUTSIDE OF THE PROJECT LIMITS IS TO BE RETURNED TO EXISTING CONDITIONS AFTER CONSTRUCTION IS COMPLETE.

CONSTRUCTION NOTES:

1. INSTALL WHITE EDGE LINE PER WSDOT STD. PLAN M-20.10-02
2. INSTALL YELLOW DOUBLE CENTERLINE LINE PER WSDOT STD. PLAN M-20.10-02
4. PAINTED STOP LINE PER WSDOT STD. PLAN M-24.60-03

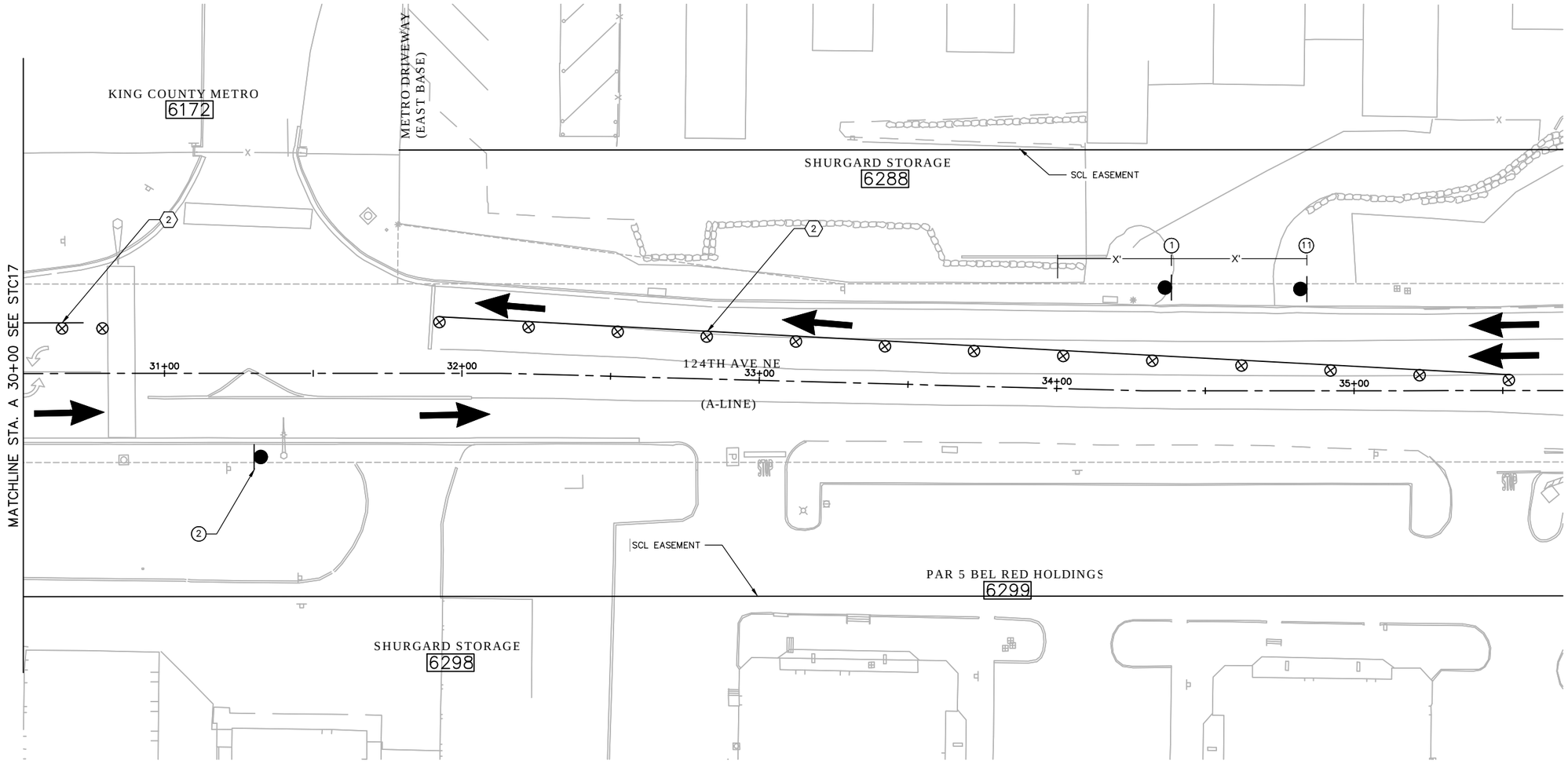

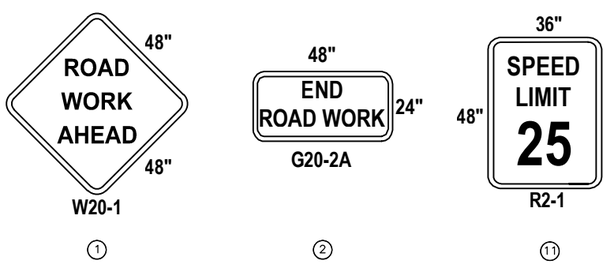

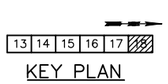

KEY PLAN

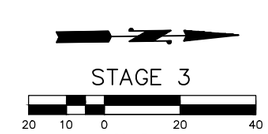

NO.	DATE	BY	APPR.	REVISIONS

Approved By

TRANSPORTATION DESIGN MANAGER — DATE
M. ARAKELYAN
PROJECT MANAGER — DATE

S. HAYS — DESIGNED BY — DATE
J. FRYE — DRAWN BY — DATE
G. ROYCROFT — CHECKED BY — DATE

City of Bellevue
TRANSPORTATION DEPARTMENT

HDR

124th Ave NE - NE Spring Blvd to NE Ichigo Way

STAGING & TRAFFIC CONTROL PLANS
STA. A 30+00 TO END

SHEET NAME STC18

SHT 29 OF 198

SIGN DETAIL: D6-1 (MOD)
N.T.S.

PCMS	
1	2
ROAD WORK AHEAD	AT 124TH AVE

PORTABLE CHANGEABLE MESSAGE SIGN DETAIL
N.T.S.

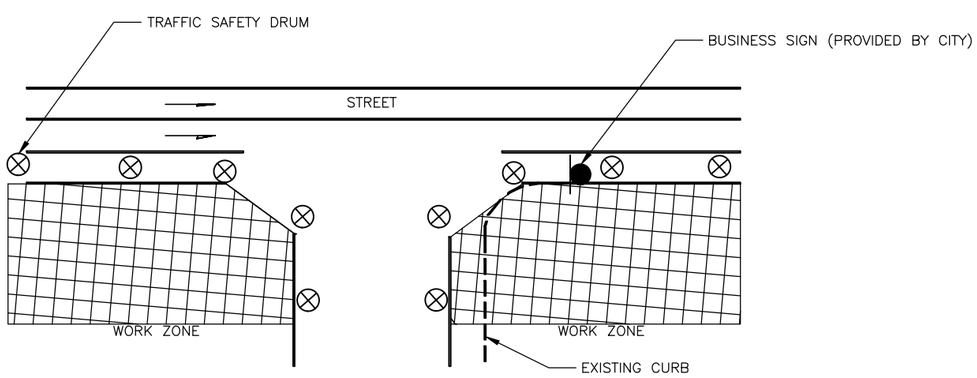

DRIVEWAY ACCESS DETAIL
N.T.S.

NO.	DATE	BY	APPR.	REVISIONS

Approved By

TRANSPORTATION DESIGN MANAGER — DATE
M. ARAKELYAN
PROJECT MANAGER — DATE

S. HAYS — DESIGNED BY — DATE
J. FRYE — DRAWN BY — DATE
G. ROYCROFT — CHECKED BY — DATE

City of Bellevue
TRANSPORTATION DEPARTMENT

124th Ave NE - NE Spring Blvd to NE Ichigo Way

STAGING & TRAFFIC CONTROL DETAILS

SHEET NAME STCD1

SHT 30 OF 198

SECTION 28, T. 25 N., R5E., W.M.
KING COUNTY

95% SUBMITTAL NOT FOR CONSTRUCTION

GENERAL NOTES:

1. UNLESS OTHERWISE NOTED, ALL DIMENSIONS ARE IN FEET.
2. CALL UTILITIES UNDERGROUND LOCATION CENTER AT 1-800-424-5555 48 HOURS PRIOR TO CONSTRUCTION.
3. UNDERGROUND UTILITIES SHOWN ARE APPROXIMATE INFORMATION CONTAINED WITHIN AS-BUILT DRAWINGS, FIELD LOCATES AND POTHOLING INFORMATION.
4. THE CONTRACTOR SHALL MAINTAIN 11 FOOT MINIMUM TRAVEL LANES DURING CONSTRUCTION EXCEPT DURING FINAL PAVEMENT RESTORATION.
5. ALL CONC AND ASPHALT SURFACES TO BE REMOVED SHALL BE SAWCUT UNLESS ANOTHER METHOD OF CUTTING FOR REMOVAL IS DESIGNATED IN THE PLANS.
6. DRIVEWAY ACCESS MUST BE MAINTAINED AT ALL TIMES UNLESS OTHERWISE AGREED TO BY THE CITY OF BELLEVUE.
7. PROVIDE, INSTALL, AND MAINTAIN TEMPORARY CHAIN LINK FENCE WITH PRIVACY SCREENING ON THE RIGHT OF WAY WHERE AN EXISTING FENCE WAS REMOVED. A TEMPORARY CHAIN LINK FENCE TO REMAIN IN PLACE UNTIL THE NEW FENCE IS INSTALLED.
8. FOR SIGN EQUIPMENT REMOVAL, SEE SIGNING PLANS.
9. FOR STORM PIPE AND STRUCTURE REMOVAL SEE UTILITY & DRAINAGE DEMOLITION PLANS.
10. FOR ROADWAY SIGNAGE, SEE SIGNING PLANS.
11. FOR REMOVALS, RELOCATIONS, AND ADJUSTMENTS OF TRAFFIC SIGNALS AND SIGNAL PRIORITY EQUIPMENT, SEE TRAFFIC SIGNAL PLANS.
12. SAVE AND PROTECT ALL EXISTING VEGETATION OUTSIDE THE CLEARING AND GRUBBING LIMITS.
13. PRIVATE SIGNS TO BE REMOVED BY OWNER. CONTRACTOR TO REMOVE SIGN BASE FOUNDATIONS AND ASSOCIATED ELECTRICAL CONNECTIONS.
14. ALL STATION AND OFFSET CALLOUTS REFER TO ALIGNMENT "A" UNLESS OTHERWISE NOTED.
15. THE JOINT UTILITY TRENCH (JUT) WILL BE INSTALLED BY THE FRANCHISE UTILITIES PRIOR TO THE PROJECT. THE WORK TO BE PERFORMED FOR THE JUT BY THE CITY CONTRACTOR AS PART OF THE ROADWAY CONSTRUCTION WILL INCLUDE TRENCHING, GRAVEL BACKFILL, COMPACTION AND PAVING. THE LIMITS OF THIS WORK WILL EXTEND FROM STA 18+78 TO STA 29+15 AS SHOWN ON THESE PLANS.

⊗ CONSTRUCTION NOTE QUANTITY TABULATION CODE		REMOVE EXISTING TREE & STUMP	REMOVE EXISTING CEMENT CONC. CURB AND GUTTER	REMOVE ASPHALT AND TRAFFIC ISLAND	CLEARING AND GRUBBING	PLANING BITUMINOUS PAVEMENT
	LOCATION/UNITS	EACH	L.F.	S.Y.	S.Y.	S.Y.
1	17+60 TO 18+00, RT	3				
3	16+70, 43' RT TO 18+00, 19' RT		150			
	16+30 TO 18+00			1005		
	16+93 RT TO 18+00 RT				324	
	17+44 LT TO 18+00 LT				142	
	16+00 TO 16+30					152

SITE PREPARATION LEGEND

- PLANING BITUMINOUS PAVEMENT
- REMOVING ASPHALT CONC. PAVEMENT
- CLEARING AND GRUBBING
- REMOVE TREE AND STUMP
- REMOVAL ITEM
- CUT — CUT LINE
- FILL — FILL LINE
- PROPOSED ROW
- TCE LINE

CONSTRUCTION NOTES:

1. REMOVE EXISTING TREE AND STUMP
3. REMOVE EXISTING CEMENT CONC. CURB AND GUTTER

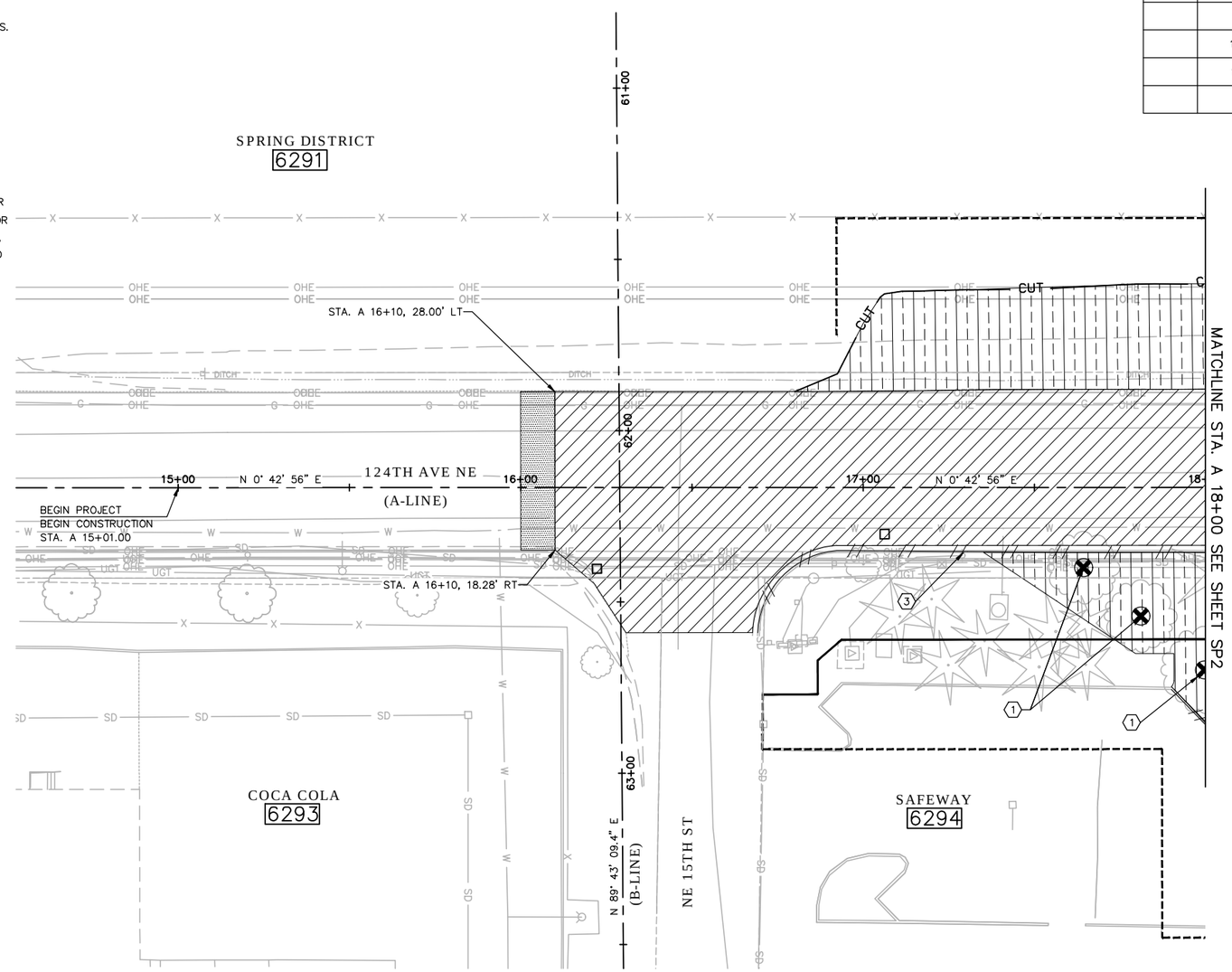

KEY PLAN

20 10 0 20 40
SCALE

NO.	DATE	BY	APPR.	REVISIONS

Approved By

TRANSPORTATION DESIGN MANAGER — DATE
M. ARAKELYAN
PROJECT MANAGER — DATE

S. HAYS — DESIGNED BY — DATE
J. FRYE — DRAWN BY — DATE
G. ROYCROFT — CHECKED BY — DATE

City of Bellevue
TRANSPORTATION DEPARTMENT

HDR

124th Ave NE - NE Spring Blvd to NE Ichigo Way

SITE PREPARATION PLAN
BEGIN TO STA. A 18+00

SHEET NAME **SP1**

SHT 31 OF 198

SECTION 28, T. 25 N., R5E., W.M.
KING COUNTY

95% SUBMITTAL NOT FOR CONSTRUCTION

GENERAL NOTES:

1. UNLESS OTHERWISE NOTED, ALL DIMENSIONS ARE IN FEET.
2. CALL UTILITIES UNDERGROUND LOCATION CENTER AT 1-800-424-5555 48 HOURS PRIOR TO CONSTRUCTION.
3. UNDERGROUND UTILITIES SHOWN ARE APPROXIMATE INFORMATION CONTAINED WITHIN AS-BUILT DRAWINGS, FIELD LOCATES AND POTHOLING INFORMATION.
4. THE CONTRACTOR SHALL MAINTAIN 11 FOOT MINIMUM TRAVEL LANES DURING CONSTRUCTION EXCEPT DURING FINAL PAVEMENT RESTORATION.
5. ALL CONC AND ASPHALT SURFACES TO BE REMOVED SHALL BE SAWCUT UNLESS ANOTHER METHOD OF CUTTING FOR REMOVAL IS DESIGNATED IN THE PLANS.
6. DRIVEWAY ACCESS MUST BE MAINTAINED AT ALL TIMES UNLESS OTHERWISE AGREED TO BY THE CITY OF BELLEVUE.
7. PROVIDE, INSTALL, AND MAINTAIN TEMPORARY CHAIN LINK FENCE WITH PRIVACY SCREENING ON THE RIGHT OF WAY WHERE AN EXISTING FENCE WAS REMOVED. A TEMPORARY CHAIN LINK FENCE TO REMAIN IN PLACE UNTIL THE NEW FENCE IS INSTALLED.
8. FOR SIGN EQUIPMENT REMOVAL, SEE SIGNING PLANS.
9. FOR STORM PIPE AND STRUCTURE REMOVAL SEE UTILITY & DRAINAGE DEMOLITION PLANS.
10. FOR ROADWAY SIGNAGE, SEE SIGNING PLANS.
11. FOR REMOVALS, RELOCATIONS, AND ADJUSTMENTS OF TRAFFIC SIGNALS AND SIGNAL PRIORITY EQUIPMENT, SEE TRAFFIC SIGNAL PLANS.
12. SAVE AND PROTECT ALL EXISTING VEGETATION OUTSIDE THE CLEARING AND GRUBBING LIMITS.
13. PRIVATE SIGNS TO BE REMOVED BY OWNER. CONTRACTOR TO REMOVE SIGN BASE FOUNDATIONS AND ASSOCIATED ELECTRICAL CONNECTIONS.
14. ALL STATION AND OFFSET CALLOUTS REFER TO ALIGNMENT "A" UNLESS OTHERWISE NOTED.
15. THE JOINT UTILITY TRENCH (JUT) WILL BE INSTALLED BY THE FRANCHISE UTILITIES PRIOR TO THE PROJECT. THE WORK TO BE PERFORMED FOR THE JUT BY THE CITY CONTRACTOR AS PART OF THE ROADWAY CONSTRUCTION WILL INCLUDE TRENCHING, GRAVEL BACKFILL, COMPACTION AND PAVING. THE LIMITS OF THIS WORK WILL EXTEND FROM STA 18+78 TO STA 29+15 AS SHOWN ON THESE PLANS.
16. FOR CONSTRUCTION NOTE QUANTITY TABLE, SEE SP6.

SITE PREPARATION LEGEND

- SIDEWALK & CONC REMOVAL
- CEMENT CONC. PAVEMENT REMOVAL
- REMOVING ASPHALT CONC. PAVEMENT
- CLEARING AND GRUBBING
- PROPOSED JOINT UTILITY TRENCH
- MONUMENT
- REMOVE TREE AND STUMP
- REMOVAL ITEM
- CUT — CUT LINE
- FILL — FILL LINE
- PROPOSED ROW
- TCE LINE

CONSTRUCTION NOTES:

1. REMOVE EXISTING TREE AND STUMP
2. REMOVE EXISTING CEMENT CONC. CURB
3. REMOVE EXISTING CEMENT CONC. CURB AND GUTTER
4. REMOVE EXISTING ROCK WALL
6. REMOVE EXISTING FENCE
7. REMOVE PRIVATE SIGN FOUNDATION AND APPURTENANCES
8. REMOVE EXISTING CULVERT
9. ADJUST MONUMENT CASE AND COVER

UTILITY POTHOLE INFORMATION:

PH1	8" GAS	GE=168.27,	TOP OF PIPE=164.1
PH2	1" POLYMER UNKNOWN,	GE=168.36,	TOP OF PIPE=165.8
PH3	10" DI WATER,	GE=168.06,	TOP OF PIPE=163.9
PH4	10" DI WATER,	GE=162.53,	TOP OF PIPE=158.2
PH5	5" COMM CONDUIT,	GE=162.31,	TOP OF CONDUIT=159.7

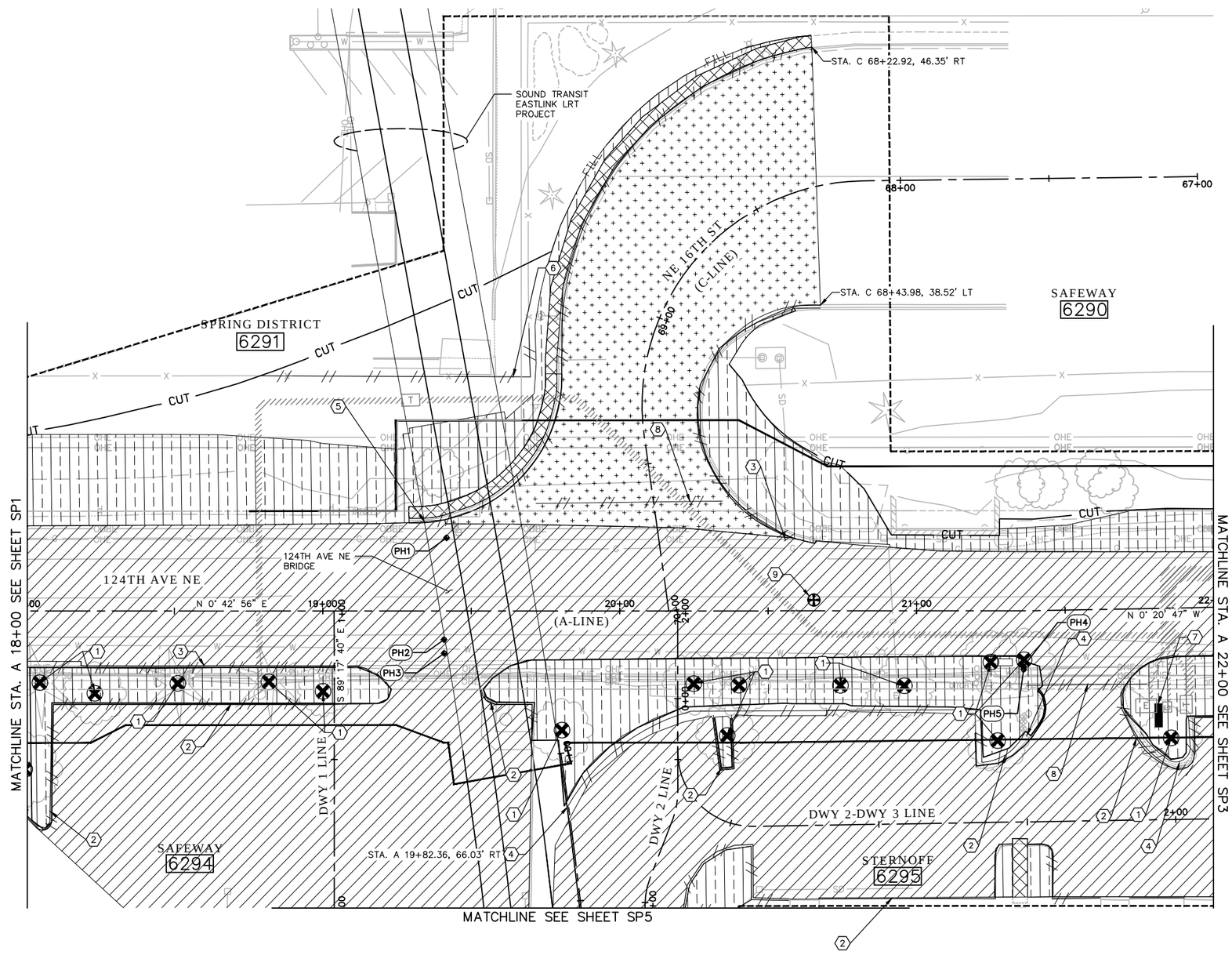

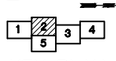

KEY PLAN

20 10 0 20 40
SCALE

NO.	DATE	BY	APPR.	REVISIONS

Approved By

TRANSPORTATION DESIGN MANAGER — DATE
M. ARAKELYAN
PROJECT MANAGER — DATE

S. HAYS — DESIGNED BY — DATE
J. FRYE — DRAWN BY — DATE
G. ROYCROFT — CHECKED BY — DATE

City of Bellevue
TRANSPORTATION DEPARTMENT

HDR

124th Ave NE - NE Spring Blvd to NE Ichigo Way

SITE PREPARATION PLAN
STA. A 18+00 TO STA. A 22+00

SHEET NAME SP2

SHT 32 OF 198

SECTION 28, T. 25 N., R5E., W.M.
KING COUNTY

95% SUBMITTAL NOT FOR CONSTRUCTION

GENERAL NOTES:

1. UNLESS OTHERWISE NOTED, ALL DIMENSIONS ARE IN FEET.
2. CALL UTILITIES UNDERGROUND LOCATION CENTER AT 1-800-424-5555 48 HOURS PRIOR TO CONSTRUCTION.
3. UNDERGROUND UTILITIES SHOWN ARE APPROXIMATE INFORMATION CONTAINED WITHIN AS-BUILT DRAWINGS, FIELD LOCATES AND POTHOLING INFORMATION.
4. THE CONTRACTOR SHALL MAINTAIN 11 FOOT MINIMUM TRAVEL LANES DURING CONSTRUCTION EXCEPT DURING FINAL PAVEMENT RESTORATION.
5. ALL CONC AND ASPHALT SURFACES TO BE REMOVED SHALL BE SAWCUT UNLESS ANOTHER METHOD OF CUTTING FOR REMOVAL IS DESIGNATED IN THE PLANS.
6. DRIVEWAY ACCESS MUST BE MAINTAINED AT ALL TIMES UNLESS OTHERWISE AGREED TO BY THE CITY OF BELLEVUE.
7. PROVIDE, INSTALL, AND MAINTAIN TEMPORARY CHAIN LINK FENCE WITH PRIVACY SCREENING ON THE RIGHT OF WAY WHERE AN EXISTING FENCE WAS REMOVED. A TEMPORARY CHAIN LINK FENCE TO REMAIN IN PLACE UNTIL THE NEW FENCE IS INSTALLED.
8. FOR SIGN EQUIPMENT REMOVAL, SEE SIGNING PLANS.
9. FOR STORM PIPE AND STRUCTURE REMOVAL SEE UTILITY & DRAINAGE DEMOLITION PLANS.
10. FOR ROADWAY SIGNAGE, SEE SIGNING PLANS.
11. FOR REMOVALS, RELOCATIONS, AND ADJUSTMENTS OF TRAFFIC SIGNALS AND SIGNAL PRIORITY EQUIPMENT, SEE TRAFFIC SIGNAL PLANS.
12. SAVE AND PROTECT ALL EXISTING VEGETATION OUTSIDE THE CLEARING AND GRUBBING LIMITS.
13. PRIVATE SIGNS TO BE REMOVED BY OWNER. CONTRACTOR TO REMOVE SIGN BASE FOUNDATIONS AND ASSOCIATED ELECTRICAL CONNECTIONS.
14. ALL STATION AND OFFSET CALLOUTS REFER TO ALIGNMENT "A" UNLESS OTHERWISE NOTED.
15. THE JOINT UTILITY TRENCH (JUT) WILL BE INSTALLED BY THE FRANCHISE UTILITIES PRIOR TO THE PROJECT. THE WORK TO BE PERFORMED FOR THE JUT BY THE CITY CONTRACTOR AS PART OF THE ROADWAY CONSTRUCTION WILL INCLUDE TRENCHING, GRAVEL BACKFILL, COMPACTION AND PAVING. THE LIMITS OF THIS WORK WILL EXTEND FROM STA 18+78 TO STA 29+15 AS SHOWN ON THESE PLANS.

SITE PREPARATION LEGEND

- REMOVING ASPHALT CONC. PAVEMENT
- CLEARING AND GRUBBING
- PROPOSED JOINT UTILITY TRENCH
- REMOVE TREE AND STUMP
- REMOVAL ITEM
- CUT — CUT LINE
- FILL — FILL LINE
- PROPOSED ROW
- TCE LINE

CONSTRUCTION NOTES:

1. REMOVE EXISTING TREE AND STUMP
2. REMOVE EXISTING CEMENT CONC. CURB
4. REMOVE EXISTING ROCK WALL

UTILITY POTHOLE INFORMATION:

PH6	8" DIP WATER	GE=154.83,	TOP OF PIPE=149.8
PH7	6" GAS,	GE=148.20,	TOP OF PIPE=144.9
PH8	¾" POLYMER UNKNOWN,	GE=148.75,	TOP OF PIPE=145.6
PH9	12" DI WATER,	GE=148.96,	TOP OF PIPE=143.2
PH10	(1)1"&(2)2" PVC COMM,	GE=148.60,	TOP OF CONDUIT=145.5
PH11	8" DIP WATER	GE=154.3,	TOP OF PIPE=149.6
PH12	8" DIP WATER	GE=163.8,	TOP OF PIPE=156.1
PH13	8" CIP WATER	GE=162.3,	TOP OF PIPE=157.5
PH14	6" DIP WATER	GE=163.4,	TOP OF PIPE=156.2
PH15	8" DIP WATER	GE=175.5,	TOP OF PIPE=171.3

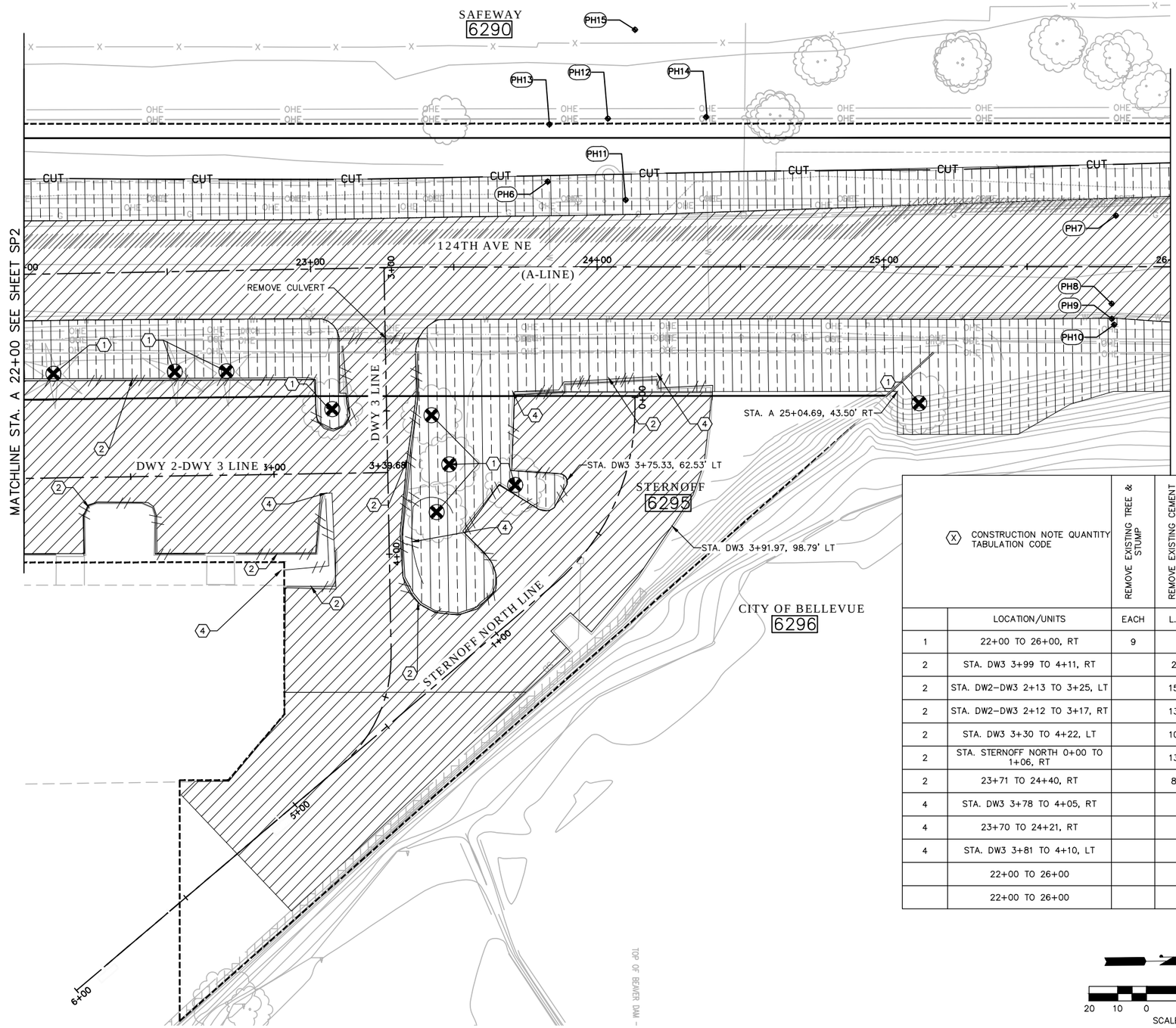

	CONSTRUCTION NOTE QUANTITY TABULATION CODE	REMOVE EXISTING TREE & STUMP	REMOVE EXISTING CEMENT CONC. CURB	REMOVE EXISTING ROCK WALL	REMOVE ASPHALT AND TRAFFIC ISLAND	CLEARING AND GRUBBING
	LOCATION/UNITS	EACH	L.F.	L.F.	S.Y.	S.Y.
1	22+00 TO 26+00, RT	9				
2	STA. DW3 3+99 TO 4+11, RT		29			
2	STA. DW2-DW3 2+13 TO 3+25, LT		154			
2	STA. DW2-DW3 2+12 TO 3+17, RT		133			
2	STA. DW3 3+30 TO 4+22, LT		105			
2	STA. STERNOFF NORTH 0+00 TO 1+06, RT		138			
2	23+71 TO 24+40, RT		82			
4	STA. DW3 3+78 TO 4+05, RT			39		
4	23+70 TO 24+21, RT			51		
4	STA. DW3 3+81 TO 4+10, LT			45		
	22+00 TO 26+00				3730	
	22+00 TO 26+00					2491

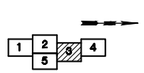

KEY PLAN

20 10 0 20 40
SCALE

PAUL A. FERRIER
STATE OF WASHINGTON
43172
REGISTERED
PROFESSIONAL ENGINEER

NO.	DATE	BY	APPR.	REVISIONS

Approved By

TRANSPORTATION DESIGN MANAGER — DATE
M. ARAKELYAN
PROJECT MANAGER — DATE

S. HAYS — DESIGNED BY — DATE
J. FRYE — DRAWN BY — DATE
G. ROYCROFT — CHECKED BY — DATE

City of Bellevue
TRANSPORTATION DEPARTMENT

HDR

124th Ave NE - NE Spring Blvd to NE Ichigo Way

SITE PREPARATION PLAN
STA. A 22+00 TO STA. A 26+00

SHEET NAME SP3

SHT 33 OF 198

SECTION 28, T. 25 N., R5E., W.M.
KING COUNTY

95% SUBMITTAL NOT FOR CONSTRUCTION

GENERAL NOTES:

1. UNLESS OTHERWISE NOTED, ALL DIMENSIONS ARE IN FEET.
2. CALL UTILITIES UNDERGROUND LOCATION CENTER AT 1-800-424-5555 48 HOURS PRIOR TO CONSTRUCTION.
3. UNDERGROUND UTILITIES SHOWN ARE APPROXIMATE INFORMATION CONTAINED WITHIN AS-BUILT DRAWINGS, FIELD LOCATES AND POTHOLING INFORMATION.
4. THE CONTRACTOR SHALL MAINTAIN 11 FOOT MINIMUM TRAVEL LANES DURING CONSTRUCTION EXCEPT DURING FINAL PAVEMENT RESTORATION.
5. ALL CONC AND ASPHALT SURFACES TO BE REMOVED SHALL BE SAWCUT UNLESS ANOTHER METHOD OF CUTTING FOR REMOVAL IS DESIGNATED IN THE PLANS.
6. DRIVEWAY ACCESS MUST BE MAINTAINED AT ALL TIMES UNLESS OTHERWISE AGREED TO BY THE CITY OF BELLEVUE.
7. PROVIDE, INSTALL, AND MAINTAIN TEMPORARY CHAIN LINK FENCE WITH PRIVACY SCREENING ON THE RIGHT OF WAY WHERE AN EXISTING FENCE WAS REMOVED. A TEMPORARY CHAIN LINK FENCE TO REMAIN IN PLACE UNTIL THE NEW FENCE IS INSTALLED.
8. FOR SIGN EQUIPMENT REMOVAL, SEE SIGNING PLANS.
9. FOR STORM PIPE AND STRUCTURE REMOVAL SEE UTILITY & DRAINAGE DEMOLITION PLANS.
10. FOR ROADWAY SIGNAGE, SEE SIGNING PLANS.
11. FOR REMOVALS, RELOCATIONS, AND ADJUSTMENTS OF TRAFFIC SIGNALS AND SIGNAL PRIORITY EQUIPMENT, SEE TRAFFIC SIGNAL PLANS.
12. SAVE AND PROTECT ALL EXISTING VEGETATION OUTSIDE THE CLEARING AND GRUBBING LIMITS.
13. PRIVATE SIGNS TO BE REMOVED BY OWNER. CONTRACTOR TO REMOVE SIGN BASE FOUNDATIONS AND ASSOCIATED ELECTRICAL CONNECTIONS.
14. ALL STATION AND OFFSET CALLOUTS REFER TO ALIGNMENT "A" UNLESS OTHERWISE NOTED.
15. THE JOINT UTILITY TRENCH (JUT) WILL BE INSTALLED BY THE FRANCHISE UTILITIES PRIOR TO THE PROJECT. THE WORK TO BE PERFORMED FOR THE JUT BY THE CITY CONTRACTOR AS PART OF THE ROADWAY CONSTRUCTION WILL INCLUDE TRENCHING, GRAVEL BACKFILL, COMPACTION AND PAVING. THE LIMITS OF THIS WORK WILL EXTEND FROM STA 18+78 TO STA 29+15 AS SHOWN ON THESE PLANS.

SITE PREPARATION LEGEND

- PLANING BITUMINOUS PAVEMENT
- REMOVING ASPHALT CONC. PAVEMENT
- CLEARING AND GRUBBING
- PROPOSED JOINT UTILITY TRENCH
- REMOVAL ITEM
- CUT — CUT LINE
- FILL — FILL LINE
- PROPOSED ROW
- TCE LINE

CONSTRUCTION NOTES:

(10) REMOVE EXISTING TRAFFIC ARROWS
(21) REMOVE STRUCTURES AND OBSTRUCTIONS

(X) CONSTRUCTION NOTE QUANTITY TABULATION CODE		REMOVE ASPHALT AND TRAFFIC ISLAND	CLEARING AND GRUBBING	REMOVE EXISTING CONC. CURB AND GUTTER	REMOVING CEMENT CONC. SIDEWALK	REMOVE EXISTING TRAFFIC ARROS	PLANING BITUMINOUS PAVEMENT
	LOCATION/UNITS	S.Y.	S.Y.	L.F.	S.Y.	EACH	S.Y.
	26+00 TO 28+94	1933					
	26+00 TO 28+94		725				
	28+11 TO 28+94			142			
	28+67 TO 28+87				30		
	29+26 TO 30+29					2	
	29+00 TO 29+23						172

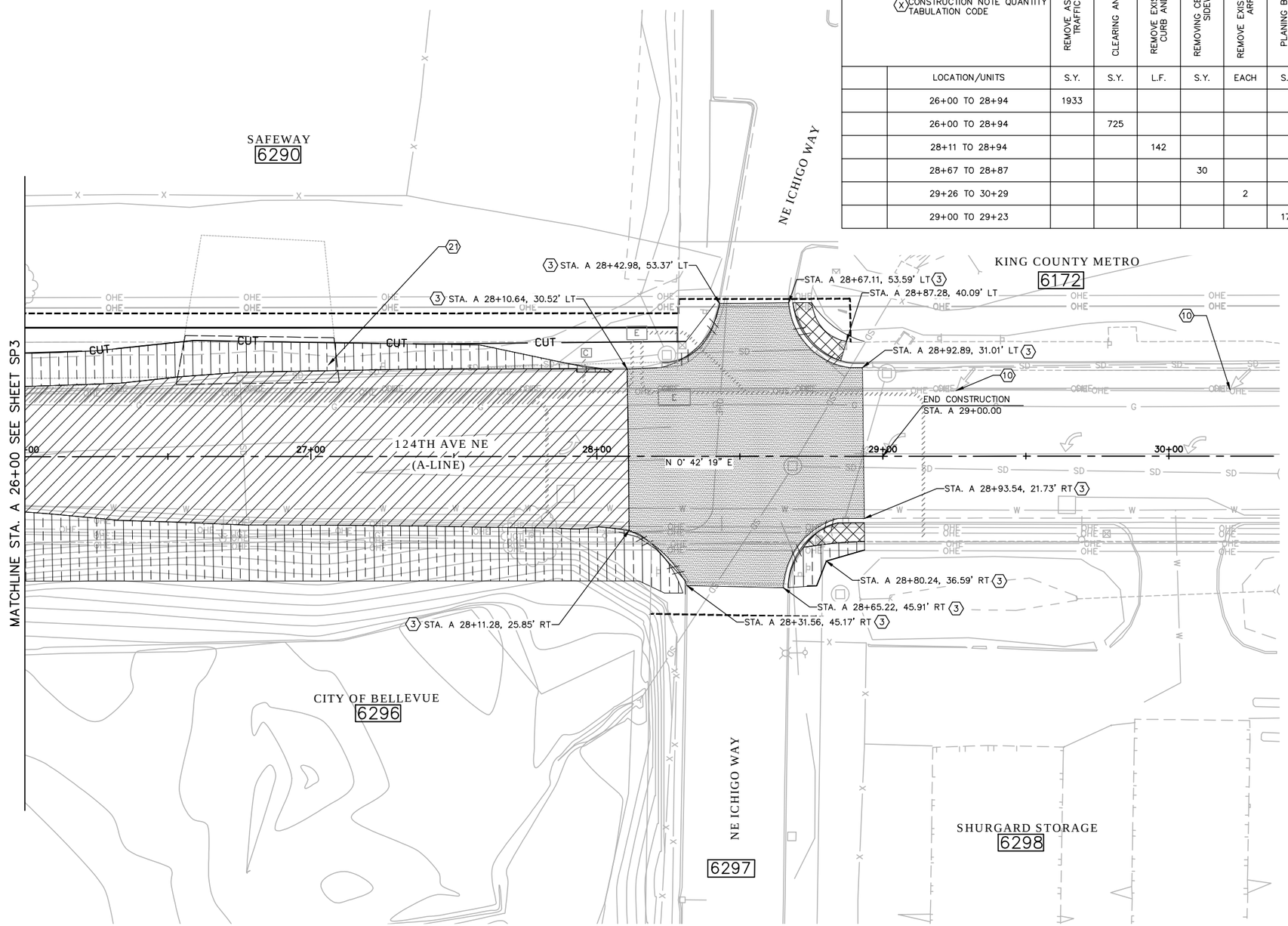

KEY PLAN

NO.	DATE	BY	APPR.	REVISIONS

Approved By

TRANSPORTATION DESIGN MANAGER — DATE
M. ARAKELYAN
PROJECT MANAGER — DATE

S. HAYS
DESIGNED BY — DATE
J. FRYE
DRAWN BY — DATE
G. ROYCROFT
CHECKED BY — DATE

City of Bellevue
TRANSPORTATION DEPARTMENT

HDR

124th Ave NE - NE Spring Blvd to NE Ichigo Way

SITE PREPARATION PLAN
STA. A 26+00 TO END

SHEET NAME **SP4**

SHT 34 OF 198

SECTION 28, T. 25 N., R5E., W.M.
KING COUNTY

95% SUBMITTAL NOT FOR CONSTRUCTION

GENERAL NOTES:

1. UNLESS OTHERWISE NOTED, ALL DIMENSIONS ARE IN FEET.
2. CALL UTILITIES UNDERGROUND LOCATION CENTER AT 1-800-424-5555 48 HOURS PRIOR TO CONSTRUCTION.
3. UNDERGROUND UTILITIES SHOWN ARE APPROXIMATE INFORMATION CONTAINED WITHIN AS-BUILT DRAWINGS, FIELD LOCATES AND POTHOLING INFORMATION.
4. THE CONTRACTOR SHALL MAINTAIN 11 FOOT MINIMUM TRAVEL LANES DURING CONSTRUCTION EXCEPT DURING FINAL PAVEMENT RESTORATION.
5. ALL CONC AND ASPHALT SURFACES TO BE REMOVED SHALL BE SAWCUT UNLESS ANOTHER METHOD OF CUTTING FOR REMOVAL IS DESIGNATED IN THE PLANS.
6. DRIVEWAY ACCESS MUST BE MAINTAINED AT ALL TIMES UNLESS OTHERWISE AGREED TO BY THE CITY OF BELLEVUE.
7. PROVIDE, INSTALL, AND MAINTAIN TEMPORARY CHAIN LINK FENCE WITH PRIVACY SCREENING ON THE RIGHT OF WAY WHERE AN EXISTING FENCE WAS REMOVED. A TEMPORARY CHAIN LINK FENCE TO REMAIN IN PLACE UNTIL THE NEW FENCE IS INSTALLED.
8. FOR SIGN EQUIPMENT REMOVAL, SEE SIGNING PLANS.
9. FOR STORM PIPE AND STRUCTURE REMOVAL SEE UTILITY & DRAINAGE DEMOLITION PLANS.
10. FOR ROADWAY SIGNAGE, SEE SIGNING PLANS.
11. FOR REMOVALS, RELOCATIONS, AND ADJUSTMENTS OF TRAFFIC SIGNALS AND SIGNAL PRIORITY EQUIPMENT, SEE TRAFFIC SIGNAL PLANS.
12. SAVE AND PROTECT ALL EXISTING VEGETATION OUTSIDE THE CLEARING AND GRUBBING LIMITS.
13. PRIVATE SIGNS TO BE REMOVED BY OWNER. CONTRACTOR TO REMOVE SIGN BASE FOUNDATIONS AND ASSOCIATED ELECTRICAL CONNECTIONS.
14. ALL STATION AND OFFSET CALLOUTS REFER TO ALIGNMENT "A" UNLESS OTHERWISE NOTED.
15. THE JOINT UTILITY TRENCH (JUT) WILL BE INSTALLED BY THE FRANCHISE UTILITIES PRIOR TO THE PROJECT. THE WORK TO BE PERFORMED FOR THE JUT BY THE CITY CONTRACTOR AS PART OF THE ROADWAY CONSTRUCTION WILL INCLUDE TRENCHING, GRAVEL BACKFILL, COMPACTION AND PAVING. THE LIMITS OF THIS WORK WILL EXTEND FROM STA 18+78 TO STA 29+15 AS SHOWN ON THESE PLANS.

SITE PREPARATION LEGEND

- REMOVING ASPHALT CONC. PAVEMENT
- CLEARING AND GRUBBING
- REMOVAL ITEM
- CUT — CUT LINE
- FILL — FILL LINE
- PROPOSED ROW
- TCE LINE

(X) CONSTRUCTION NOTE QUANTITY TABULATION CODE		REMOVE EXISTING CEMENT CONC. CURB	REMOVE ASPHALT AND TRAFFIC ISLAND	CLEARING AND GRUBBING
	LOCATION/UNITS	L.F.	S.Y.	S.Y.
2	STA. DW2 3+27 TO 3+31, RT	42		
2	STA. DW2 3+02 TO 3+99, LT	133		
	STA. DW1 2+00 TO 2+34		488	
	STA. DW2 3+02 TO 3+99		630	
	STA. DW2 3+27 TO 3+31, RT			8
	STA. DW2 3+94 TO 3+98, LT			9

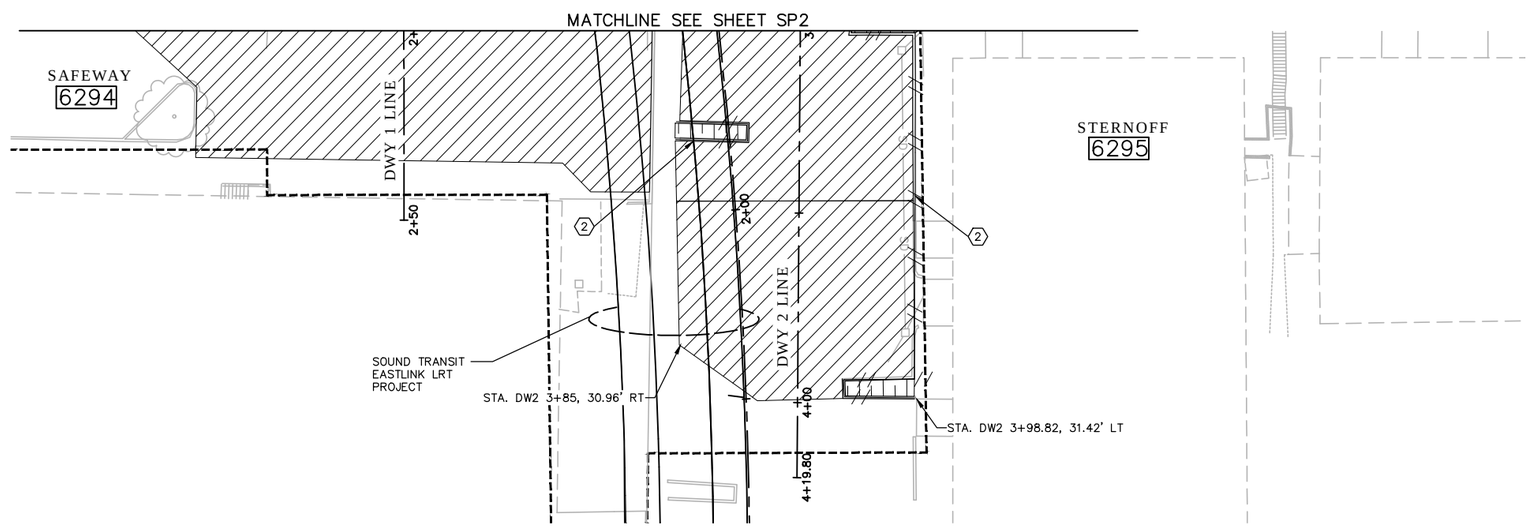

CONSTRUCTION NOTES:

(2) REMOVE EXISTING CEMENT CONC. CURB

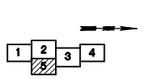

KEY PLAN

20 10 0 20 40
SCALE

NO.	DATE	BY	APPR.	REVISIONS

Approved By

TRANSPORTATION DESIGN MANAGER — DATE
M. ARAKELYAN
PROJECT MANAGER — DATE

S. HAYS — DESIGNED BY — DATE
J. FRYE — DRAWN BY — DATE
G. ROYCROFT — CHECKED BY — DATE

City of Bellevue
TRANSPORTATION DEPARTMENT

HDR

124th Ave NE - NE Spring Blvd to NE Ichigo Way

SITE PREPARATION PLAN

SHEET NAME SP5

SHT 35 OF 198

SECTION 28, T. 25 N., R5E., W.M.
KING COUNTY

95% SUBMITTAL NOT FOR CONSTRUCTION

GENERAL NOTES:

1. UNLESS OTHERWISE NOTED, ALL DIMENSIONS ARE IN FEET.
2. CALL UTILITIES UNDERGROUND LOCATION CENTER AT 1-800-424-5555 48 HOURS PRIOR TO CONSTRUCTION.
3. UNDERGROUND UTILITIES SHOWN ARE APPROXIMATE INFORMATION CONTAINED WITHIN AS-BUILT DRAWINGS, FIELD LOCATES AND POTHOLING INFORMATION.
4. THE CONTRACTOR SHALL MAINTAIN 11 FOOT MINIMUM TRAVEL LANES DURING CONSTRUCTION EXCEPT DURING FINAL PAVEMENT RESTORATION.
5. ALL CONC AND ASPHALT SURFACES TO BE REMOVED SHALL BE SAWCUT UNLESS ANOTHER METHOD OF CUTTING FOR REMOVAL IS DESIGNATED IN THE PLANS.
6. DRIVEWAY ACCESS MUST BE MAINTAINED AT ALL TIMES UNLESS OTHERWISE AGREED TO BY THE CITY OF BELLEVUE.
7. PROVIDE, INSTALL, AND MAINTAIN TEMPORARY CHAIN LINK FENCE WITH PRIVACY SCREENING ON THE RIGHT OF WAY WHERE AN EXISTING FENCE WAS REMOVED. A TEMPORARY CHAIN LINK FENCE TO REMAIN IN PLACE UNTIL THE NEW FENCE IS INSTALLED.
8. FOR SIGN EQUIPMENT REMOVAL, SEE SIGNING PLANS.
9. FOR STORM PIPE AND STRUCTURE REMOVAL SEE UTILITY & DRAINAGE DEMOLITION PLANS.
10. FOR ROADWAY SIGNAGE, SEE SIGNING PLANS.
11. FOR REMOVALS, RELOCATIONS, AND ADJUSTMENTS OF TRAFFIC SIGNALS AND SIGNAL PRIORITY EQUIPMENT, SEE TRAFFIC SIGNAL PLANS.
12. SAVE AND PROTECT ALL EXISTING VEGETATION OUTSIDE THE CLEARING AND GRUBBING LIMITS.
13. PRIVATE SIGNS TO BE REMOVED BY OWNER. CONTRACTOR TO REMOVE SIGN BASE FOUNDATIONS AND ASSOCIATED ELECTRICAL CONNECTIONS.
14. ALL STATION AND OFFSET CALLOUTS REFER TO ALIGNMENT "A" UNLESS OTHERWISE NOTED.
15. THE JOINT UTILITY TRENCH (JUT) WILL BE INSTALLED BY THE FRANCHISE UTILITIES PRIOR TO THE PROJECT. THE WORK TO BE PERFORMED FOR THE JUT BY THE CITY CONTRACTOR AS PART OF THE ROADWAY CONSTRUCTION WILL INCLUDE TRENCHING, GRAVEL BACKFILL, COMPACTION AND PAVING. THE LIMITS OF THIS WORK WILL EXTEND FROM STA 18+78 TO STA 29+15 AS SHOWN ON THESE PLANS.

(X) CONSTRUCTION NOTE QUANTITY TABULATION CODE		REMOVE EXISTING TREE & STUMP	REMOVE EXISTING CEMENT CONC. CURB	REMOVE EXISTING CONC. CURB AND GUTTER	REMOVE EXISTING ROCK WALL	REMOVE EXISTING FENCE	REMOVE PRIVATE SIGN FOUNDATIONS AND APPURTENANCES	REMOVE EXISTING CULVERT	REMOVE EXISTING MONUMENT	REMOVE ASPHALT AND TRAFFIC ISLAND	CLEARING AND GRUBBING	REMOVING CEMENT CONC. PAVEMENT	REMOVING CEMENT CONC. SIDEWALK
	LOCATION/UNITS	EACH	L.F.	L.F.	L.F.	L.F.	EACH	L.F.	EACH	S.Y.	S.Y.	S.Y.	S.Y.
1	18+00 TO 22+00, RT	15											
2	17+90 TO 19+00, RT		156										
2	19+53 TO 19+70, RT		32										
2	STA. DW2-DW3 1+84 TO 2+13, LT		64										
2	STA. DW2 2+70 TO 3+02, LT		51										
2	STA. DW2-DW3 0+57 TO 2+02, RT		173										
3	19+29 TO 19+80, LT			233									
3	STA. C 68+44 TO 69+84 LT			125									
4	19+82 TO 21+36, RT				188								
4	21+75 TO 21+91, RT				34								
6	19+58 TO 19+70, LT					12							
7	21+81, 36' RT						1						
8	19+71 TO 20+34, LT							63					
8	21+37 TO 21+77, RT							40					
9	20+65.38, 3.64' LT								1				
	18+00 TO 22+00									4538	1713		
	19+29 TO 20+58											1107	113

PAUL A. FERRIER
STATE OF WASHINGTON
43172
REGISTERED
PROFESSIONAL ENGINEER

NO.	DATE	BY	APPR.	REVISIONS

Approved By

TRANSPORTATION DESIGN MANAGER — DATE
M. ARAKELYAN
PROJECT MANAGER — DATE

S. HAYS
DESIGNED BY — DATE
J. FRYE
DRAWN BY — DATE
G. ROYCROFT
CHECKED BY — DATE

City of Bellevue
TRANSPORTATION DEPARTMENT

HDR

124th Ave NE - NE Spring Blvd to NE Ichigo Way

SITE PREPARATION PLAN
SP2 CONSTRUCTION NOTE TABLE

SHEET NAME SP6

GENERAL NOTES:
1. UNLESS OTHERWISE NOTED, ALL DIMENSIONS ARE IN FEET.
2. SEE ROW PLANS FOR RIGHTS OF WAY AND EASEMENT INFORMATION

SECTION 28, T. 25 N., R5E., W.M.
KING COUNTY

95% SUBMITTAL NOT FOR CONSTRUCTION

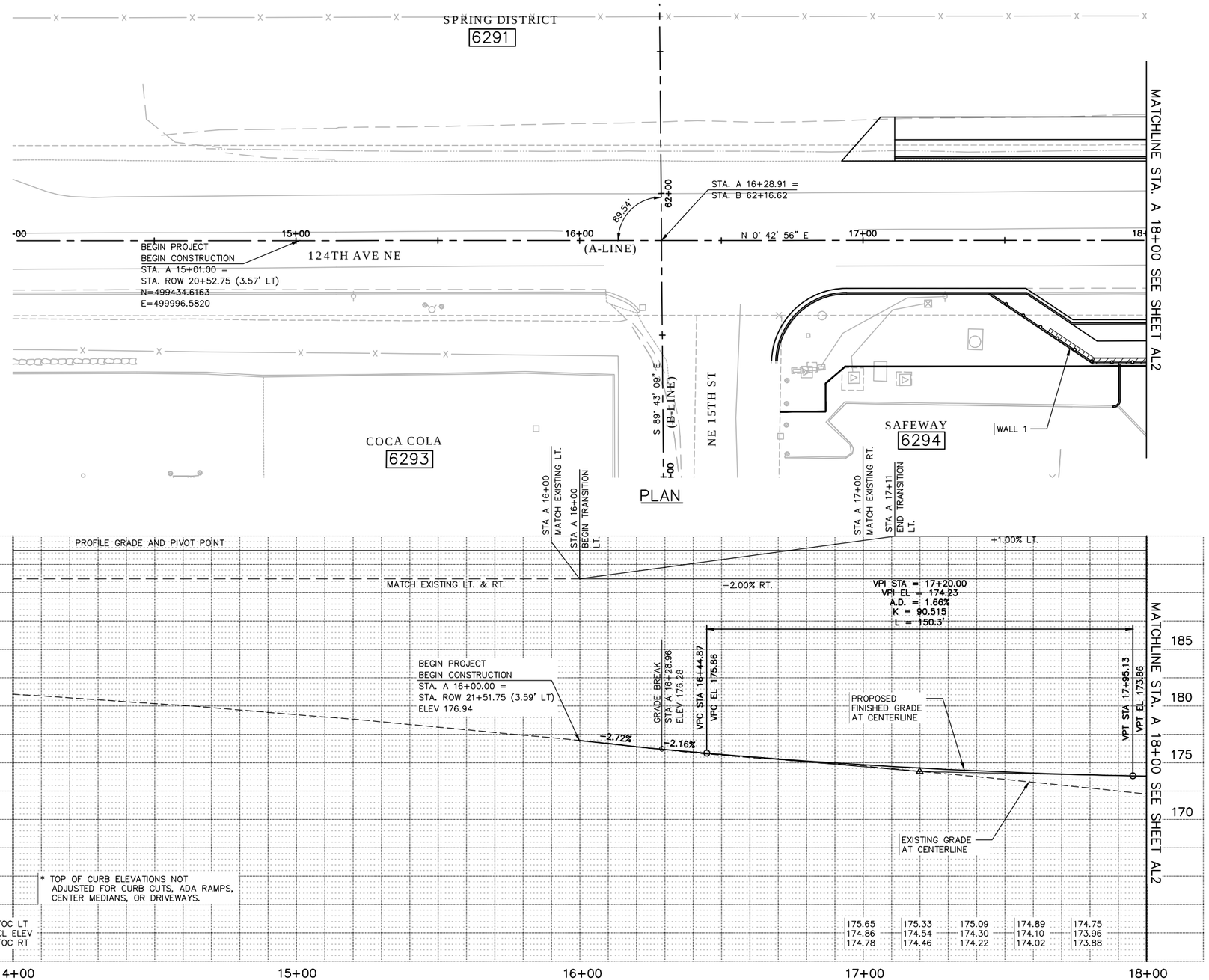

LEGEND

- EXISTING RIGHT-OF-WAY
- PROPOSED RIGHT-OF-WAY
- #### PARCEL NUMBER

20 10 0 20 40
HORIZONTAL SCALE

5 2.5 0 5 10
VERTICAL SCALE

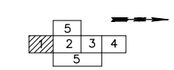

KEY PLAN

NO.	DATE	BY	APPR.	REVISIONS

Approved By

TRANSPORTATION DESIGN MANAGER M. ARAKELYAN — DATE
PROJECT MANAGER — DATE

S. HAYS — DESIGNED BY — DATE
J. FRYE — DRAWN BY — DATE
G. ROYCROFT — CHECKED BY — DATE

City of Bellevue
TRANSPORTATION DEPARTMENT

124th Ave NE - NE Spring Blvd to NE Ichigo Way

ALIGNMENT & PROFILE PLAN
BEGIN TO STA. A 18+00

SHEET NAME **AL1**

SHT 37 OF 198

GENERAL NOTES:
1. UNLESS OTHERWISE NOTED, ALL DIMENSIONS ARE IN FEET.
2. SEE ROW PLANS FOR RIGHTS OF WAY AND EASEMENT INFORMATION

SECTION 28, T. 25 N., R5E., W.M.
KING COUNTY

95% SUBMITTAL NOT FOR CONSTRUCTION

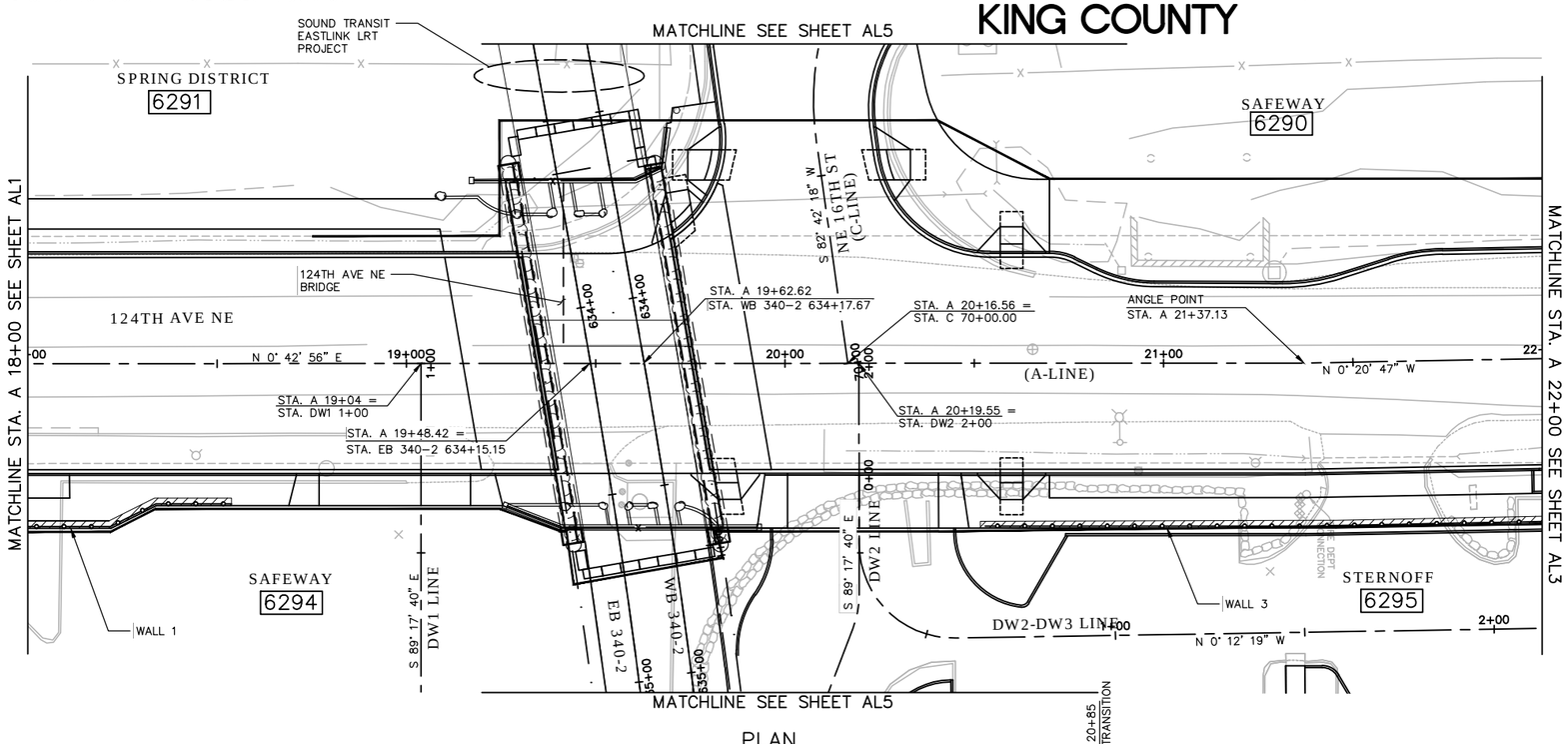

PLAN

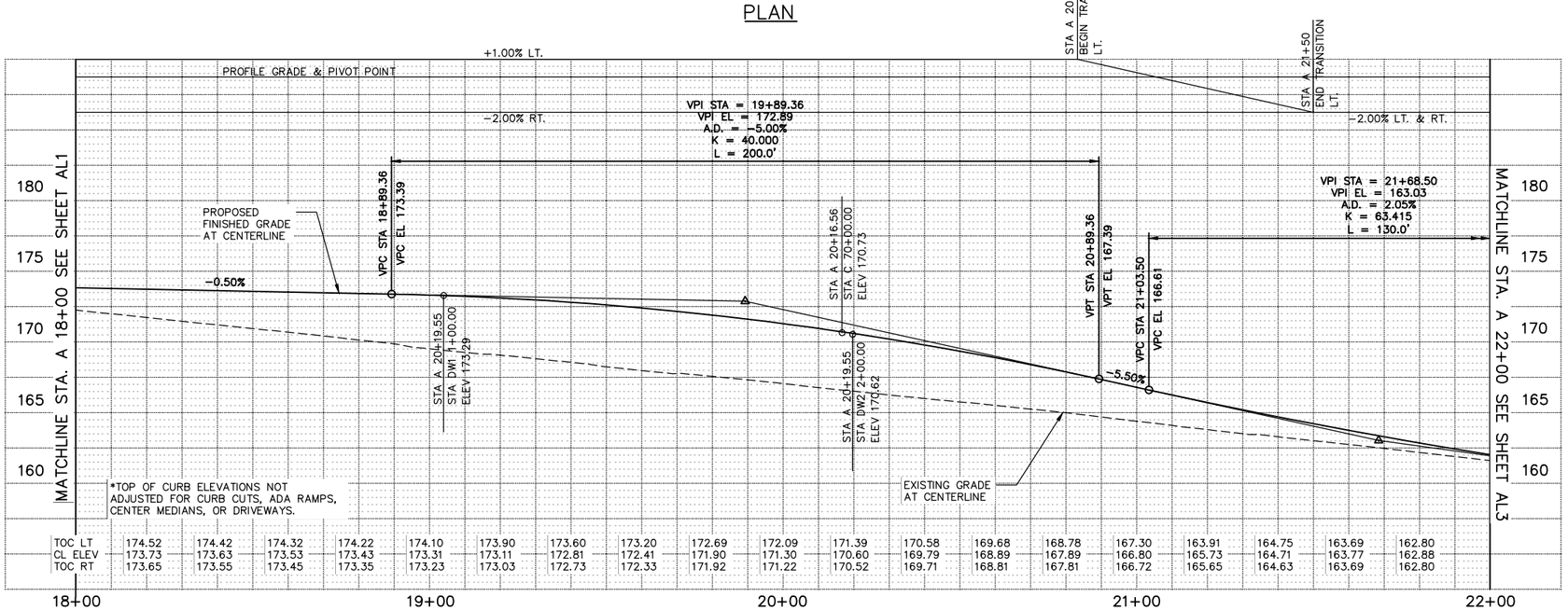

PROFILE

LEGEND

- EXISTING RIGHT-OF-WAY
- PROPOSED RIGHT-OF-WAY
- #### PARCEL NUMBER

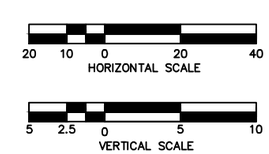

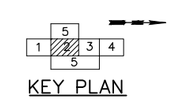

KEY PLAN

NO.	DATE	BY	APPR.	REVISIONS

Approved By

TRANSPORTATION DESIGN MANAGER — DATE
M. ARAKELYAN
PROJECT MANAGER — DATE

S. HAYS — DESIGNED BY — DATE
J. FRYE — DRAWN BY — DATE
G. ROYCROFT — CHECKED BY — DATE

City of Bellevue
TRANSPORTATION DEPARTMENT

124th Ave NE - NE Spring Blvd to NE Ichigo Way

ALIGNMENT & PROFILE PLAN
STA. A 18+00 TO STA. A 22+00

SHEET NAME **AL2**

SHT 38 OF 198

GENERAL NOTES:
1. UNLESS OTHERWISE NOTED, ALL DIMENSIONS ARE IN FEET.
2. SEE ROW PLANS FOR RIGHTS OF WAY AND EASEMENT INFORMATION

SECTION 28, T. 25 N., R5E., W.M.
KING COUNTY

95% SUBMITTAL NOT FOR CONSTRUCTION

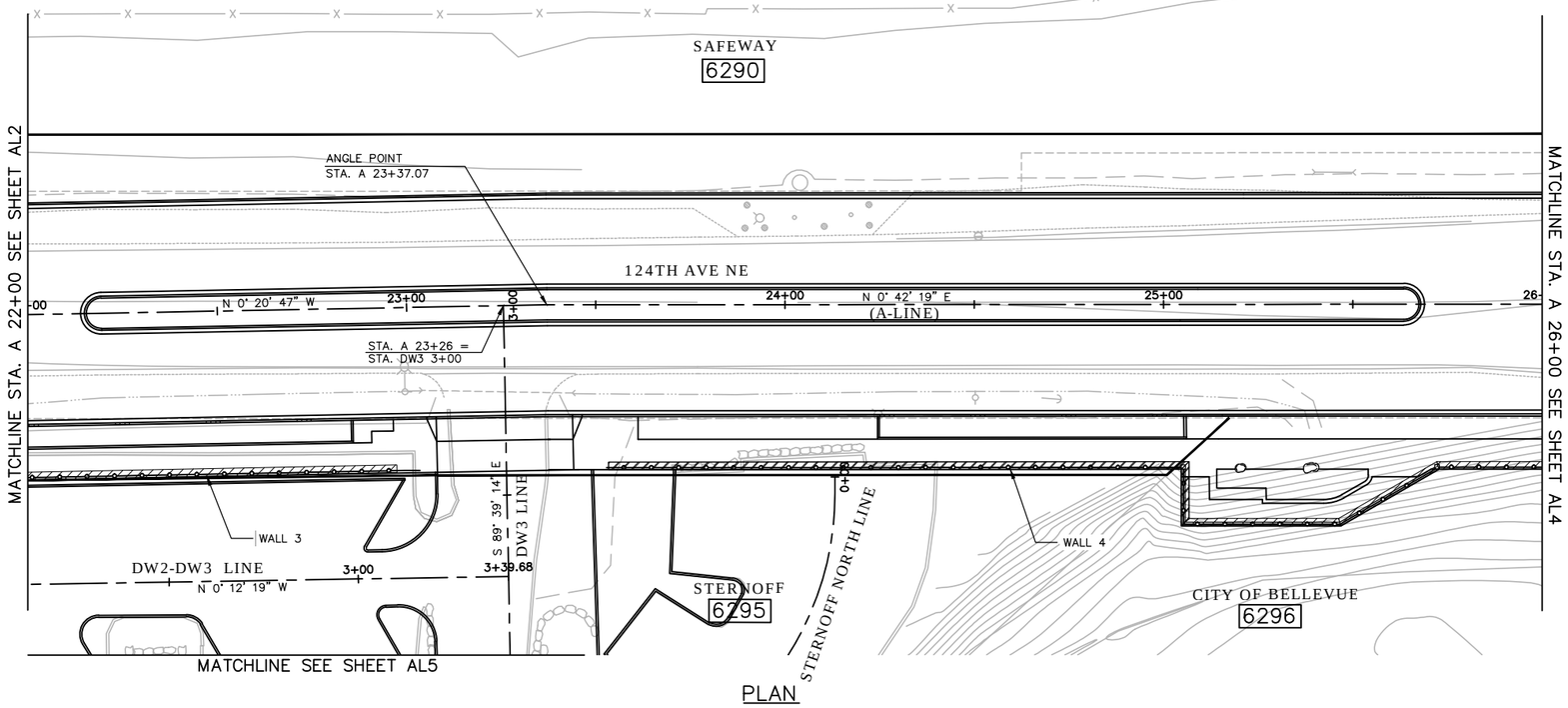

PLAN

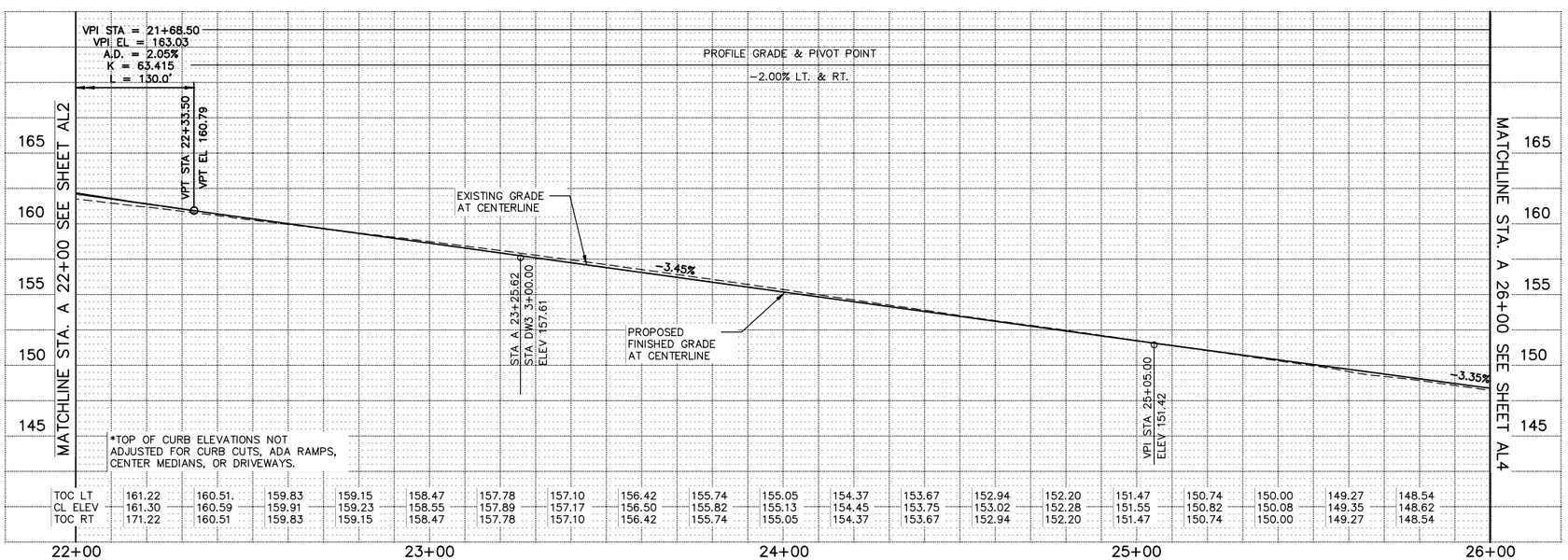

PROFILE

LEGEND

- EXISTING RIGHT-OF-WAY
- PROPOSED RIGHT-OF-WAY
- PARCEL NUMBER

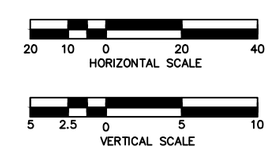

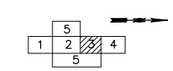

KEY PLAN

NO.	DATE	BY	APPR.	REVISIONS

Approved By

TRANSPORTATION DESIGN MANAGER — DATE
M. ARAKELYAN
PROJECT MANAGER — DATE

S. HAYS — DESIGNED BY — DATE
J. FRYE — DRAWN BY — DATE
G. ROYCROFT — CHECKED BY — DATE

City of Bellevue
TRANSPORTATION DEPARTMENT

HDR

124th Ave NE - NE Spring Blvd to NE Ichigo Way

ALIGNMENT & PROFILE PLAN
STA. A 22+00 TO STA. A 26+00

SHEET NAME **AL3**

GENERAL NOTES:
1. UNLESS OTHERWISE NOTED, ALL DIMENSIONS ARE IN FEET.
2. SEE ROW PLANS FOR RIGHTS OF WAY AND EASEMENT INFORMATION

SECTION 28, T. 25 N., R5E., W.M.
KING COUNTY

95% SUBMITTAL NOT FOR CONSTRUCTION

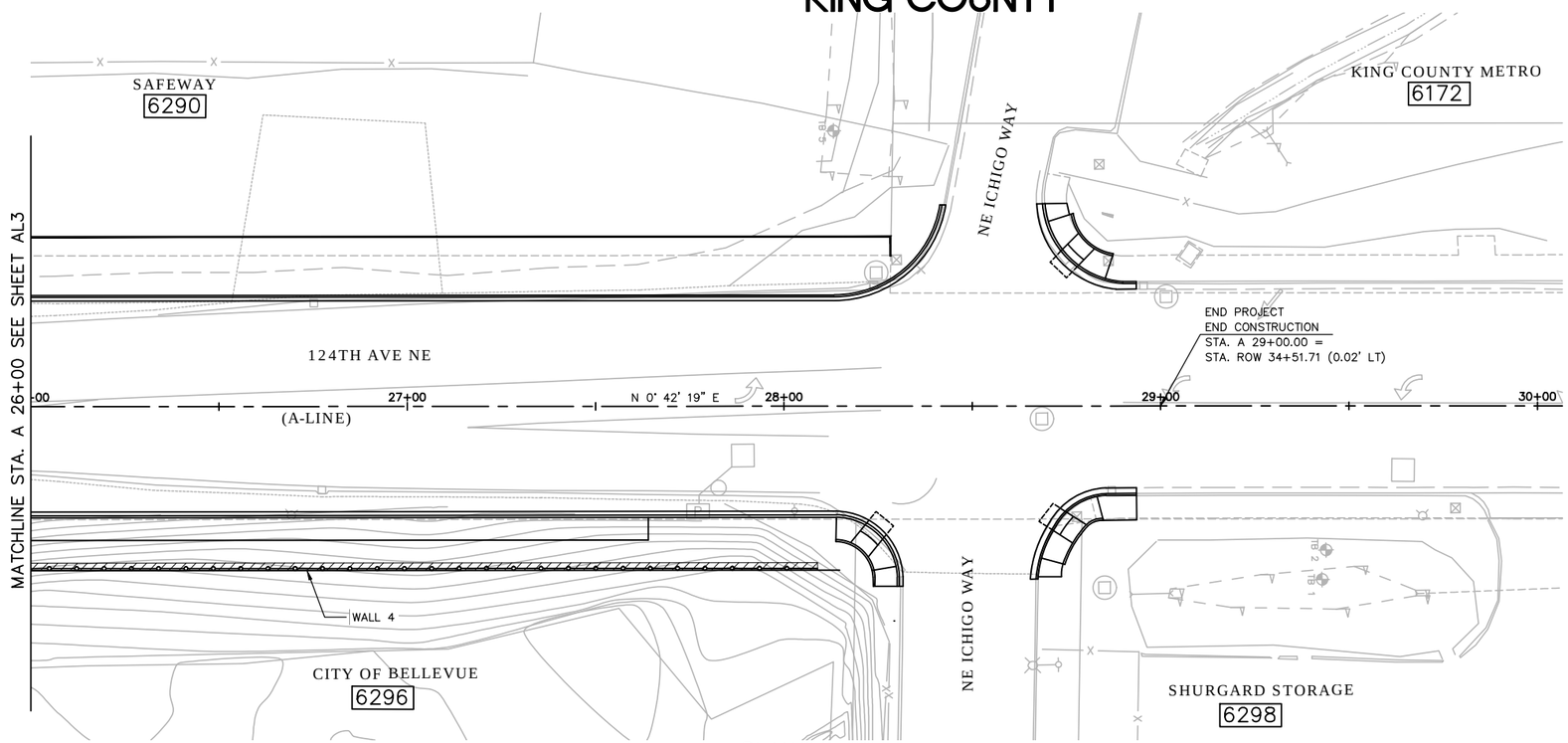

PLAN

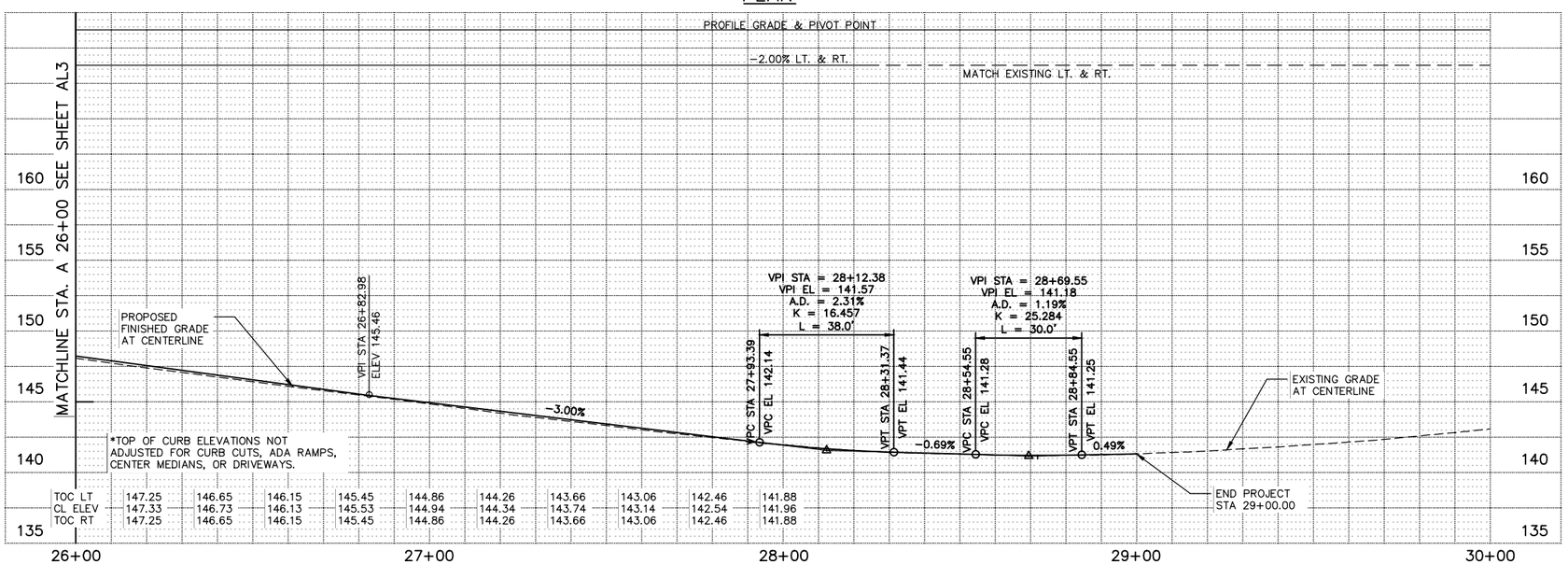

PROFILE

LEGEND
- EXISTING RIGHT-OF-WAY
- PROPOSED RIGHT-OF-WAY
- #### PARCEL NUMBER

20 10 0 20 40
HORIZONTAL SCALE

5 2.5 0 5 10
VERTICAL SCALE

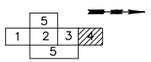

KEY PLAN

NO.	DATE	BY	APPR.	REVISIONS

Approved By

TRANSPORTATION DESIGN MANAGER — DATE
M. ARAKELYAN
PROJECT MANAGER — DATE

S. HAYS — DESIGNED BY — DATE
J. FRYE — DRAWN BY — DATE
G. ROYCROFT — CHECKED BY — DATE

City of Bellevue
TRANSPORTATION DEPARTMENT

HDR

124th Ave NE - NE Spring Blvd to NE Ichigo Way

ALIGNMENT & PROFILE PLAN
STA. A 26+00 TO END

SHEET NAME AL4

SHT 40 OF 198

GENERAL NOTES:
1. UNLESS OTHERWISE NOTED, ALL DIMENSIONS ARE IN FEET.
2. SEE ROW PLANS FOR RIGHTS OF WAY AND EASEMENT INFORMATION

SECTION 28, T. 25 N., R5E., W.M.
KING COUNTY

95% SUBMITTAL NOT FOR CONSTRUCTION

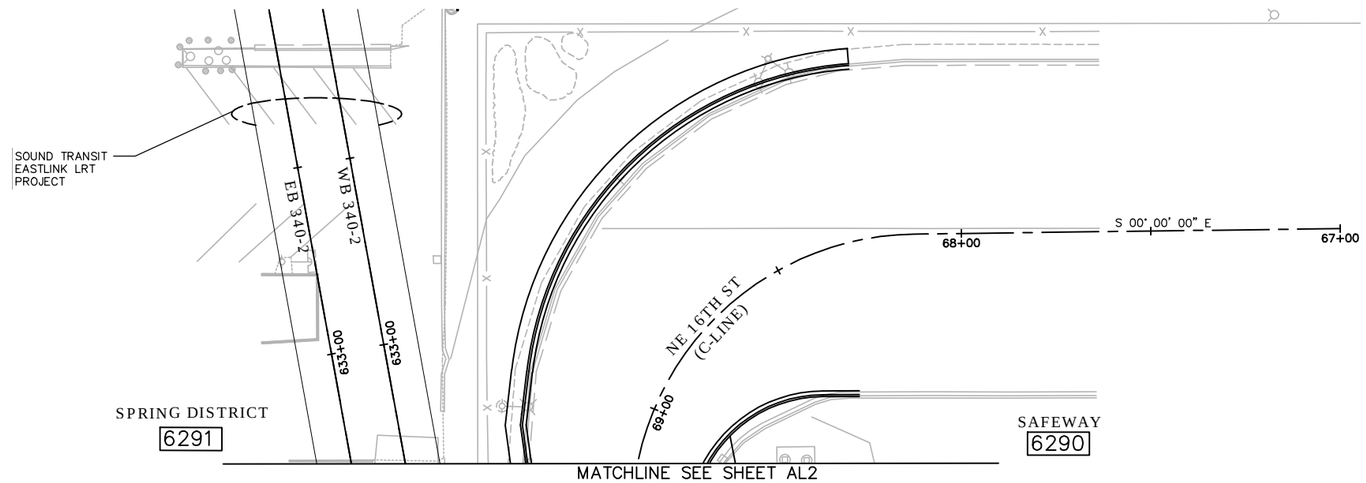

LEGEND
- EXISTING RIGHT-OF-WAY
- PROPOSED RIGHT-OF-WAY
- PARCEL NUMBER

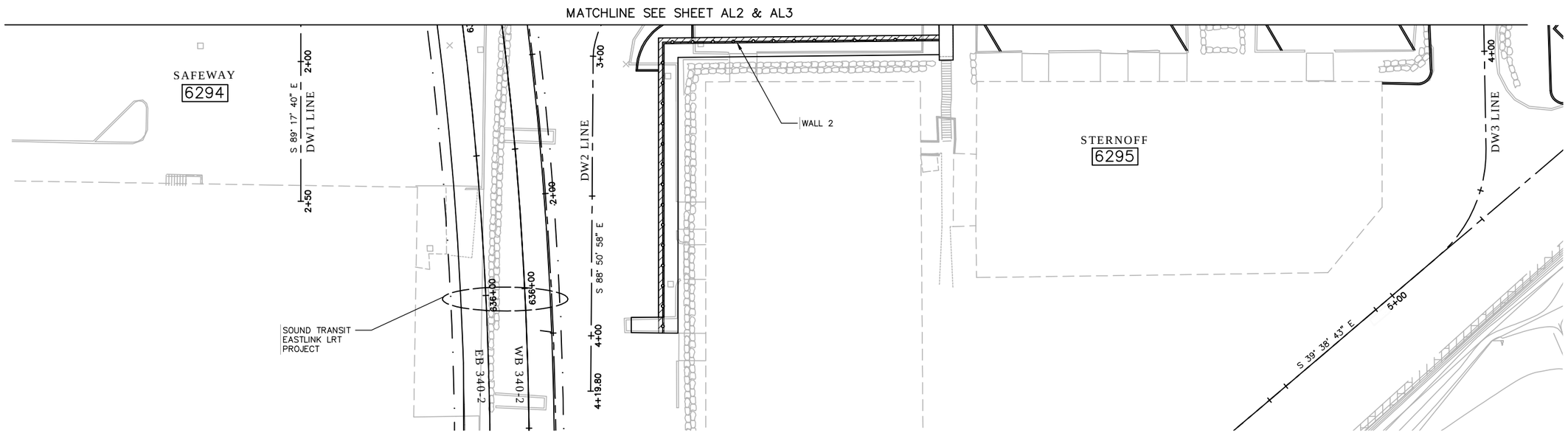

20 10 0 20 40
HORIZONTAL SCALE

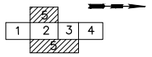

KEY PLAN

PAUL A. FERRER
STATE OF WASHINGTON
43172
REGISTERED
PROFESSIONAL ENGINEER

NO.	DATE	BY	APPR.	REVISIONS

Approved By

TRANSPORTATION DESIGN MANAGER — DATE
M. ARAKELYAN
PROJECT MANAGER — DATE

S. HAYS
DESIGNED BY — DATE
J. FRYE
DRAWN BY — DATE
G. ROYCROFT
CHECKED BY — DATE

City of Bellevue
TRANSPORTATION DEPARTMENT

HDR

124th Ave NE - NE Spring Blvd to NE Ichigo Way

ALIGNMENT & ROW PLAN

SHEET NAME AL5

SHT 41 OF 198

SECTION 28, T. 25 N., R5E., W.M.
KING COUNTY

95% SUBMITTAL NOT FOR CONSTRUCTION

GENERAL NOTES:

1. CALL UTILITIES UNDERGROUND LOCATION CENTER AT 1-800-424-5555 48 HOURS PRIOR TO CONSTRUCTION.
2. DETECTABLE WARNINGS SHALL CONSIST OF RAISED TRUNCATED DOMES MEETING APPLICABLE CHARACTERISTICS SPECIFIED BY THE ADA AND COB STANDARD DRAWINGS TE-12A TO TE-12D.
3. FOR JUNCTION BOX AND ELECTRICAL CONDUIT INSTALLATION, SEE UTILITY SHEETS.
4. FOR CENTERLINE INFORMATION AND PROFILES, SEE ALIGNMENT/ROW AND PROFILE SHEETS.
5. FOR CURB RAMP AND CURB RETURN INFORMATION, SEE INTERSECTION GRADING SHEETS.
6. FOR DRIVEWAY APPROACH DETAILS, SEE DRIVEWAY APPROACH PLANS.
7. FOR DOWEL BAR PLACEMENT SEE WSDOT STD PLAN A-40.10-02.
8. FOR PIGMENTED CONC. SIDEWALK AND SAWCUT DETAILS, SEE SHEETS LSD04 AND PVD1.
9. INSTALL CURB CUTS IN CURB AND GUTTER PER SCHEDULE ON PVD1.
10. FOR CURB CUT DETAIL SEE SHEET PVD1.

LEGEND

- PIGMENTED CONC. SIDEWALK (SEE PVD5)
- CONC. SIDEWALK (SEE PVD5)
- CEMENT CONC. PAVEMENT
- HMA CL 1/2 IN. PG 70-22 - FULL DEPTH
- HMA CL 1/2 IN. PG 64-22
- HMA CL 1/2 IN. PG 70-22 - BUTT JOINT
- LANDSCAPE AREA (SEE LANDSCAPE PLANS)
- (1) CONSTRUCTION NOTES
- RETAINING WALL
- CUT — CUT LINE
- FILL — FILL LINE

CONSTRUCTION NOTES:

(1) CONSTRUCT CEMENT CONCRETE CURB AND GUTTER PER COB STD. DWG. NO TE-10.
(3) CONSTRUCT CEMENT CONC. SIDEWALK, PER TYPICAL SECTION DETAILS, SHEETS RS1-RS6.
(2) CONSTRUCT PIGMENTED CEMENT CONC. SIDEWALK, PER TYPICAL SECTION DETAILS, SHEETS RS1-RS6.
(6) LANDSCAPE PLANTER, SEE LANDSCAPE PLANS.
(11) CONSTRUCT RETAINING WALL, SEE RETAINING WALL PLANS.
(15) INSTALL TEMPORARY HMA SIDEWALK
(13) CONSTRUCT CEMENT CONCRETE TRAFFIC CURB PER COB STD. DWG. TE-10.
(17) INSTALL PEDESTRIAN RAILING TYPE 1, SEE PRD PLANS.

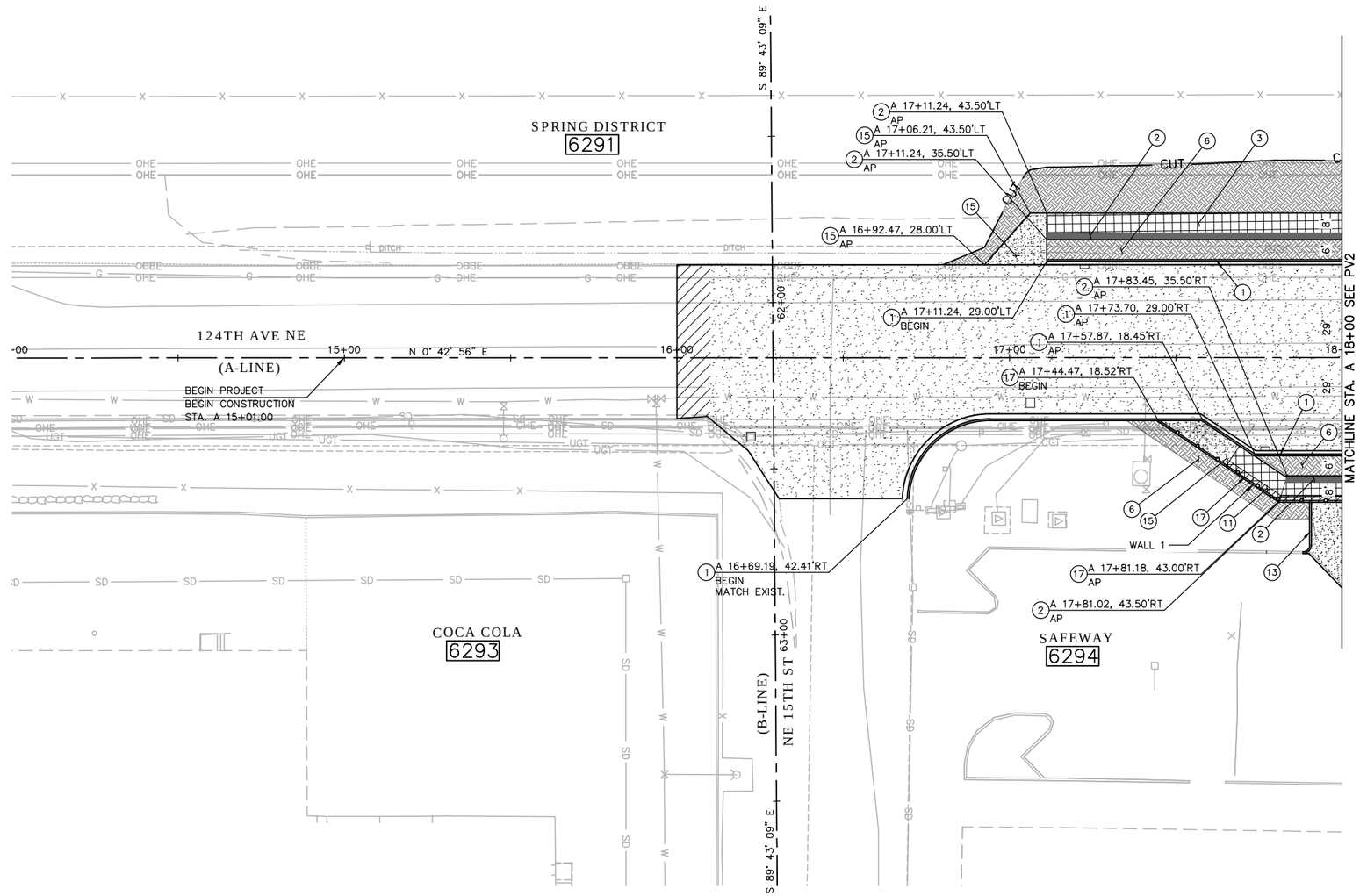

KEY PLAN

SCALE 20 10 0 20 40

NO.	DATE	BY	APPR.	REVISIONS

Approved By

TRANSPORTATION DESIGN MANAGER — DATE
M. ARAKELYAN
PROJECT MANAGER — DATE

S. HAYS — DESIGNED BY — DATE
J. FRYE — DRAWN BY — DATE
G. ROYCROFT — CHECKED BY — DATE

City of Bellevue
TRANSPORTATION DEPARTMENT

HDR

124th Ave NE - NE Spring Blvd to NE Ichigo Way

PAVING PLAN
BEGIN TO STA. A 18+00

SHEET NAME PV1

SHT 42 OF 198

SECTION 28, T. 25 N., R5E., W.M.
KING COUNTY

95% SUBMITTAL NOT FOR CONSTRUCTION

GENERAL NOTES:

1. CALL UTILITIES UNDERGROUND LOCATION CENTER AT 1-800-424-5555 48 HOURS PRIOR TO CONSTRUCTION.
2. DETECTABLE WARNINGS SHALL CONSIST OF RAISED TRUNCATED DOMES MEETING APPLICABLE CHARACTERISTICS SPECIFIED BY THE ADA AND COB STANDARD DRAWINGS TE-12A TO TE-12D.
3. FOR JUNCTION BOX AND ELECTRICAL CONDUIT INSTALLATION, SEE UTILITY SHEETS.
4. FOR CENTERLINE INFORMATION AND PROFILES, SEE ALIGNMENT/ROW AND PROFILE SHEETS.
5. FOR CURB RAMP AND CURB RETURN INFORMATION, SEE INTERSECTION GRADING SHEETS.
6. FOR DRIVEWAY APPROACH DETAILS, SEE DRIVEWAY APPROACH PLANS.
7. FOR DOWEL BAR PLACEMENT SEE WSDOT STD PLAN A-40.10-02.
8. FOR PIGMENTED CONC. SIDEWALK AND SAWCUT DETAILS, SEE SHEETS LSD04 AND PVD1.
9. INSTALL CURB CUTS IN CURB AND GUTTER PER SCHEDULE ON PVD1.
10. FOR CURB CUT DETAIL SEE SHEET PVD1.

CONSTRUCTION NOTES:

1. CONSTRUCT CEMENT CONCRETE CURB AND GUTTER PER COB STD. DWG. NO TE-10.
2. CONSTRUCT PIGMENTED CEMENT CONC. SIDEWALK, PER TYPICAL SECTION DETAILS, SHEETS RS1-RS6.
3. CONSTRUCT CEMENT CONC. SIDEWALK PER TYPICAL SECTION DETAILS, SHEETS RS1-RS6
4. CONSTRUCT CONCRETE DRIVEWAY APPROACH DESIGN A PER COB STD. DWG. NO DEV-7A.
5. CONSTRUCT CEMENT CONCRETE SIDEWALK RAMP TYPE 1A PER COB STD. DWG. NO TE-12B.
6. LANDSCAPE PLANTER, SEE LANDSCAPE PLANS.
7. BIORETENTION SWALE, SEE LANDSCAPE AND DRAINAGE PLANS
10. INSTALL THICKENED EDGE SIDEWALK AND 4" TALL PEDESTRIAN CURB, SEE PAVING DETAILS
11. CONSTRUCT RETAINING WALL, SEE RETAINING WALL PLANS.
12. INSTALL CHAIN LINK FENCE TYPE 3 PER WSDOT STD. PLAN L-20.10-03.
13. CONSTRUCT CEMENT CONCRETE TRAFFIC CURB PER COB STD. DWG. TE-10.
14. INSTALL NEW MONUMENT AT NEW ELEVATION. COORDINATE LOCATION AND ELEVATION WITH CITY OF BELLEVUE SURVEY
17. INSTALL PEDESTRIAN RAILING TYPE 1, SEE PRD PLANS.

LEGEND

- PIGMENTED CONC. SIDEWALK (SEE PVD5)
- CONC. SIDEWALK (SEE PVD5)
- CEMENT CONC. PAVEMENT
- PATTERNED CONC. (SEE PVD1)
- HMA CL 1/2 IN. PG 70-22 – FULL DEPTH
- HMA CL 1/2 IN. PG 64-22
- HMA CL 1/2 IN. PG 70-22 – BUTT JOINT
- LANDSCAPE AREA (SEE LANDSCAPE PLANS)
- PIGMENTED CEMENT CONC.
- XX CURB RETURN
- (1) CONSTRUCTION NOTES
- RETAINING WALL
- CUT CUT LINE
- FILL FILL LINE

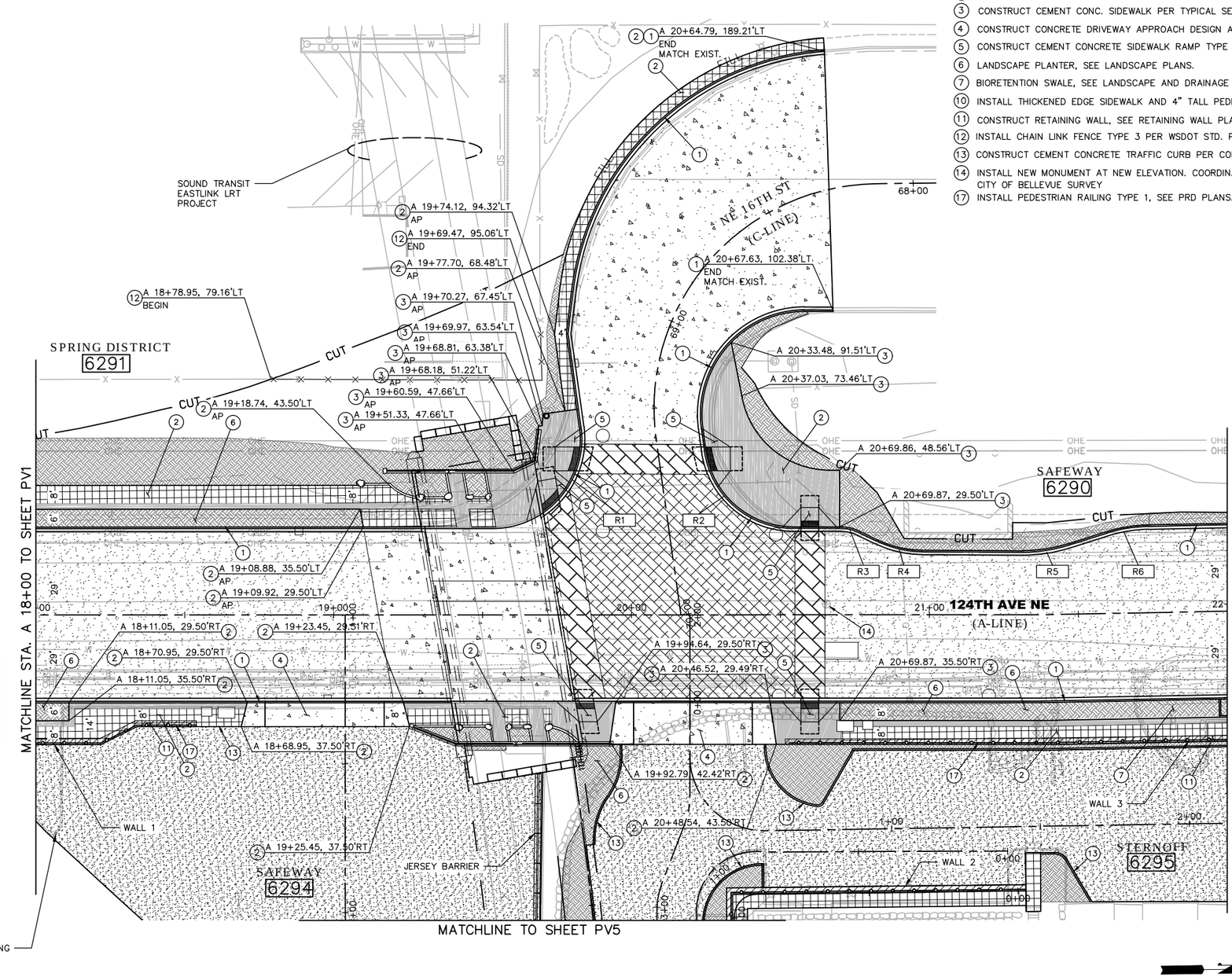

CURVE DATA: X

CURVE NO.	PC STATION/OFFSET	PT STATION/OFFSET	RADIUS	LENGTH	DELTA	TANGENT
R1	19+53.27, 29.00'LT	19+82.98, 63.11'LT	30.00'	51.25'	97°52'23"	34.43
R2	20+24.50, 54.89'LT	20+54.22, 29.00'LT	30.00'	43.00'	82°07'37"	26.14
R3	20+70.03, 29.00'LT	20+76.34, 27.55'LT	14.50'	6.54'	25°49'29"	3.32
R4	20+82.23, 24.70'LT	20+97.50, 21.16'LT	35.50'	15.82'	25°31'31"	8.04
R5	21+31.35, 20.98'LT	21+47.13, 23.13'LT	50.00'	15.58'	17°51'22"	7.85
R6	21+60, 26.94'LT	21+74.20, 29.00'LT	50.00'	14.39'	16°29'43"	7.25

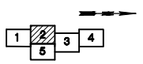

KEY PLAN

SCALE 20 10 0 20 40

PAUL A. FERRER STATE OF WASHINGTON 43172 REGISTERED PROFESSIONAL ENGINEER

NO.	DATE	BY	APPR.	REVISIONS

Approved By

TRANSPORTATION DESIGN MANAGER — DATE
M. ARAKELYAN
PROJECT MANAGER — DATE

S. HAYS — DESIGNED BY — DATE
J. FRYE — DRAWN BY — DATE
G. ROYCROFT — CHECKED BY — DATE

City of Bellevue
TRANSPORTATION DEPARTMENT

HDR

124th Ave NE - NE Spring Blvd to NE Ichigo Way

PAVING PLAN
STA. A 18+00 TO STA. A 22+00

SHEET NAME **PV2**

SHT 43 OF 198

SECTION 28, T. 25 N., R5E., W.M.
KING COUNTY

95% SUBMITTAL NOT FOR CONSTRUCTION

GENERAL NOTES:

1. CALL UTILITIES UNDERGROUND LOCATION CENTER AT 1-800-424-5555 48 HOURS PRIOR TO CONSTRUCTION.
2. DETECTABLE WARNINGS SHALL CONSIST OF RAISED TRUNCATED DOMES MEETING APPLICABLE CHARACTERISTICS SPECIFIED BY THE ADA AND COB STANDARD DRAWINGS TE-12A TO TE-12D.
3. FOR JUNCTION BOX AND ELECTRICAL CONDUIT INSTALLATION, SEE UTILITY SHEETS.
4. FOR CENTERLINE INFORMATION AND PROFILES, SEE ALIGNMENT/ROW AND PROFILE SHEETS.
5. FOR CURB RAMP AND CURB RETURN INFORMATION, SEE INTERSECTION GRADING SHEETS.
6. FOR DRIVEWAY APPROACH DETAILS, SEE DRIVEWAY APPROACH PLANS.
7. FOR DOWEL BAR PLACEMENT SEE WSDOT STD PLAN A-40.10-02.
8. FOR PIGMENTED CONC. SIDEWALK AND SAWCUT DETAILS, SEE SHEETS LSD04 AND PVD1.
9. INSTALL CURB CUTS IN CURB AND GUTTER PER SCHEDULE ON PVD1.
10. FOR CURB CUT DETAIL SEE SHEET PVD1.

LEGEND

- PIGMENTED CONC. SIDEWALK (SEE PVD5)
- CONC. SIDEWALK (SEE PVD5)
- CEMENT CONC. PAVEMENT
- HMA CL 1/2 IN. PG 70-22 – FULL DEPTH
- HMA CL 1/2 IN. PG 64-22
- WOOD DECKING (SEE LANDSCAPE PLANS)
- LANDSCAPE AREA (SEE LANDSCAPE PLANS)
- XX — CURB RETURN
- (1) — CONSTRUCTION NOTES
- RETAINING WALL
- CUT — CUT LINE
- FILL — FILL LINE

CONSTRUCTION NOTES:

(1) CONSTRUCT CEMENT CONCRETE CURB AND GUTTER PER COB STD. DWG. NO TE-10.
(2) CONSTRUCT PIGMENTED CEMENT CONC. SIDEWALK, PER TYPICAL SECTION DETAILS, SHEETS RS1-RS6.
(3) CONSTRUCT CEMENT CONC. SIDEWALK, PER TYPICAL SECTION DETAILS, SHEETS RS1-RS6.
(6) LANDSCAPE PLANTER, SEE LANDSCAPE PLANS.
(7) BIORETENTION SWALE, SEE LANDSCAPE AND DRAINAGE PLANS
(9) CONSTRUCT CONCRETE DRIVEWAY APPROACH DESIGN D PER COB STD. NO. DEV-7F.
(10) INSTALL THICKENED EDGE SIDEWALK AND 4" TALL PEDESTRIAN CURB, SEE PAVING DETAILS
(11) CONSTRUCT RETAINING WALL, SEE RETAINING WALL PLANS.
(13) CONSTRUCT CEMENT CONCRETE TRAFFIC CURB PER COB STD. DWG. TE-10.
(19) INSTALL PEDESTRIAN RAILING TYPE 2, SEE PRD PLANS.

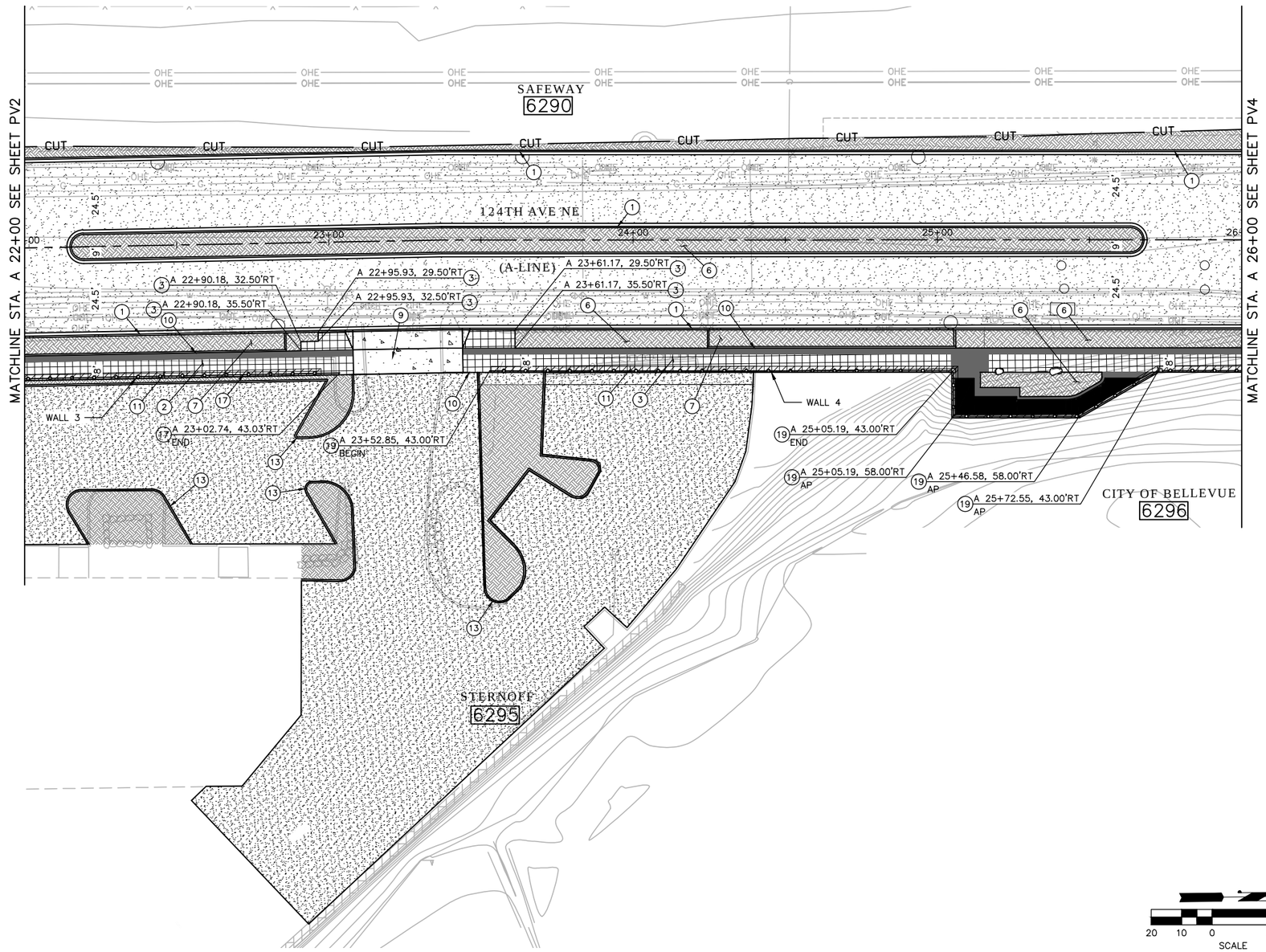

KEY PLAN

20 10 0 20 40
SCALE

NO.	DATE	BY	APPR.	REVISIONS

Approved By

TRANSPORTATION DESIGN MANAGER — DATE
M. ARAKELYAN
PROJECT MANAGER — DATE

S. HAYS — DESIGNED BY — DATE
J. FRYE — DRAWN BY — DATE
G. ROYCROFT — CHECKED BY — DATE

City of Bellevue
TRANSPORTATION DEPARTMENT

HDR

124th Ave NE - NE Spring Blvd to NE Ichigo Way

PAVING PLAN
STA. A 22+00 TO STA. A 26+00

SHEET NAME PV3

SHT 44 OF 198

SECTION 28, T. 25 N., R5E., W.M.
KING COUNTY

95% SUBMITTAL NOT FOR CONSTRUCTION

GENERAL NOTES:

1. CALL UTILITIES UNDERGROUND LOCATION CENTER AT 1-800-424-5555 48 HOURS PRIOR TO CONSTRUCTION.
2. DETECTABLE WARNINGS SHALL CONSIST OF RAISED TRUNCATED DOMES MEETING APPLICABLE CHARACTERISTICS SPECIFIED BY THE ADA AND COB STANDARD DRAWINGS TE-12A TO TE-12D.
3. FOR JUNCTION BOX AND ELECTRICAL CONDUIT INSTALLATION, SEE UTILITY SHEETS.
4. FOR CENTERLINE INFORMATION AND PROFILES, SEE ALIGNMENT/ROW AND PROFILE SHEETS.
5. FOR CURB RAMP AND CURB RETURN INFORMATION, SEE INTERSECTION GRADING SHEETS.
6. FOR DRIVEWAY APPROACH DETAILS, SEE DRIVEWAY APPROACH PLANS.
7. FOR DOWEL BAR PLACEMENT SEE WSDOT STD PLAN A-40.10-02.
8. FOR PIGMENTED CONC. SIDEWALK AND SAWCUT DETAILS, SEE SHEETS LSD04 AND PVD1.
9. INSTALL CURB CUTS IN CURB AND GUTTER PER SCHEDULE ON PVD1.
10. FOR CURB CUT DETAIL SEE SHEET PVD1.

CURVE DATA: X

CURVE NO.	PC STATION/OFFSET	PT STATION/OFFSET	RADIUS	LENGTH	DELTA	TANGENT
R1	28+41.94, 53.36'LT	28+13.31, 29.00'LT	29.00'	40.89'	80°47'35"	24.68
R2	28+68.61, 53.66'LT	28+93.56, 32.50'LT	22.77'	32.84'	82°37'08"	20.01
R3	28+13.92, 28.85'RT	28+30.56, 45.19'RT	17.06'	25.68'	86°13'44"	15.98
R4	28+66.89, 45.86'RT	28+71.83, 31.54'RT	30.11'	15.31'	29°08'13"	7.82
R5	28+71.83, 31.54'RT	28+85.48, 23.24'RT	16.44'	16.68'	58°09'59"	9.14

CONSTRUCTION NOTES:

1. CONSTRUCT CEMENT CONCRETE CURB AND GUTTER PER COB STD. DWG. NO TE-10.
2. CONSTRUCT PIGMENTED CEMENT CONC. SIDEWALK, PER TYPICAL SECTION DETAILS, SHEETS RS1-RS6.
3. CONSTRUCT CEMENT CONC. SIDEWALK, PER TYPICAL SECTION DETAILS, SHEETS RS1-RS6.
5. CONSTRUCT CEMENT CONCRETE SIDEWALK RAMP TYPE 2A PER COB STD. DWG. NO TE-12B.
6. LANDSCAPE PLANTER, SEE LANDSCAPE PLANS.
10. INSTALL THICKENED EDGE SIDEWALK AND 4" TALL PEDESTRIAN CURB, SEE PAVING DETAILS
11. CONSTRUCT RETAINING WALL, SEE RETAINING WALL PLANS.
15. INSTALL TEMPORARY HMA SIDEWALK
17. INSTALL PEDESTRIAN RAILING TYPE 1, SEE PRD PLANS.

LEGEND

- PIGMENTED CONC. SIDEWALK (SEE PVD5)
- CONC. SIDEWALK (SEE PVD5)
- HMA CL 1/2 IN. PG 70-22 - FULL DEPTH
- LANDSCAPE AREA (SEE LANDSCAPE PLANS)
- HMA CL 1/2 IN. PG 70-22 - BUTT JOINT
- (1) CONSTRUCTION NOTES
- RETAINING WALL
- CUT — CUT LINE
- FILL — FILL LINE

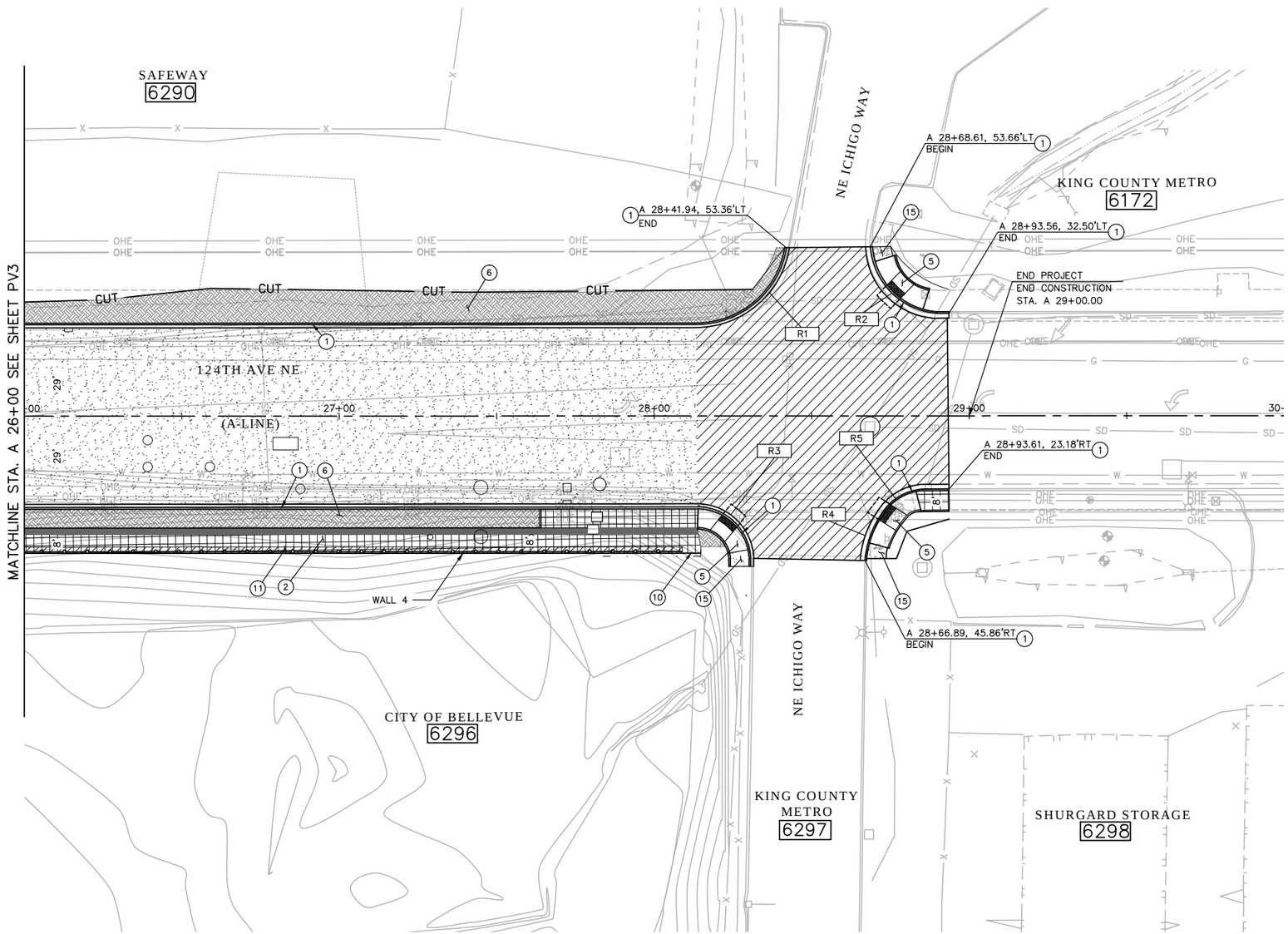

KEY PLAN

NO.	DATE	BY	APPR.	REVISIONS

Approved By

TRANSPORTATION DESIGN MANAGER — DATE
M. ARAKELYAN
PROJECT MANAGER — DATE

S. HAYS — DESIGNED BY — DATE
J. FRYE — DRAWN BY — DATE
G. ROYCROFT — CHECKED BY — DATE

City of Bellevue
TRANSPORTATION DEPARTMENT

HDR

124th Ave NE - NE Spring Blvd to NE Ichigo Way

PAVING PLAN
STA. A 26+00 TO END

SHEET NAME **PV4**

SHT 45 OF 198

SECTION 28, T. 25 N., R5E., W.M.
KING COUNTY

95% SUBMITTAL NOT FOR CONSTRUCTION

GENERAL NOTES:

1. CALL UTILITIES UNDERGROUND LOCATION CENTER AT 1-800-424-5555 48 HOURS PRIOR TO CONSTRUCTION.
2. DETECTABLE WARNINGS SHALL CONSIST OF RAISED TRUNCATED DOMES MEETING APPLICABLE CHARACTERISTICS SPECIFIED BY THE ADA AND COB STANDARD DRAWINGS TE-12A TO TE-12D.
3. FOR JUNCTION BOX AND ELECTRICAL CONDUIT INSTALLATION, SEE UTILITY SHEETS.
4. FOR CENTERLINE INFORMATION AND PROFILES, SEE ALIGNMENT/ROW AND PROFILE SHEETS.
5. FOR CURB RAMP AND CURB RETURN INFORMATION, SEE INTERSECTION GRADING SHEETS.
6. FOR DRIVEWAY APPROACH DETAILS, SEE DRIVEWAY APPROACH PLANS.
7. FOR DOWEL BAR PLACEMENT SEE WSDOT STD PLAN A-40.10-02.
8. FOR PIGMENTED CONC. SIDEWALK AND SAWCUT DETAILS, SEE SHEETS LSD04 AND PVD1.
9. INSTALL CURB CUTS IN CURB AND GUTTER PER SCHEDULE ON PVD1.
10. FOR CURB CUT DETAIL SEE SHEET PVD1.

CONSTRUCTION NOTES:

(2) CONSTRUCT PIGMENTED CEMENT CONC. SIDEWALK, PER TYPICAL SECTION DETAILS, SHEETS RS1-RS6.
(3) CONSTRUCT CEMENT CONC. SIDEWALK, PER TYPICAL SECTION DETAILS, SHEETS RS1-RS6.
(6) LANDSCAPE PLANTER, SEE LANDSCAPE PLANS.
(11) CONSTRUCT RETAINING WALL, SEE RETAINING WALL PLANS.
(13) CONSTRUCT CEMENT CONCRETE TRAFFIC CURB PER COB STD. DWG. TE-10.
(17) INSTALL PEDESTRIAN RAILING TYPE 1, SEE PRD PLANS.

LEGEND

- PIGMENTED CONC. SIDEWALK (SEE PVD5)
- CONC. SIDEWALK (SEE PVD5)
- HMA CL 1/2 IN. PG 64-22
- HMA CL 1/2 IN. PG 70-22 - BUTT JOINT
- LANDSCAPE AREA (SEE LANDSCAPE PLANS)
- (1) CONSTRUCTION NOTES
- RETAINING WALL
- CUT — CUT LINE
- FILL — FILL LINE

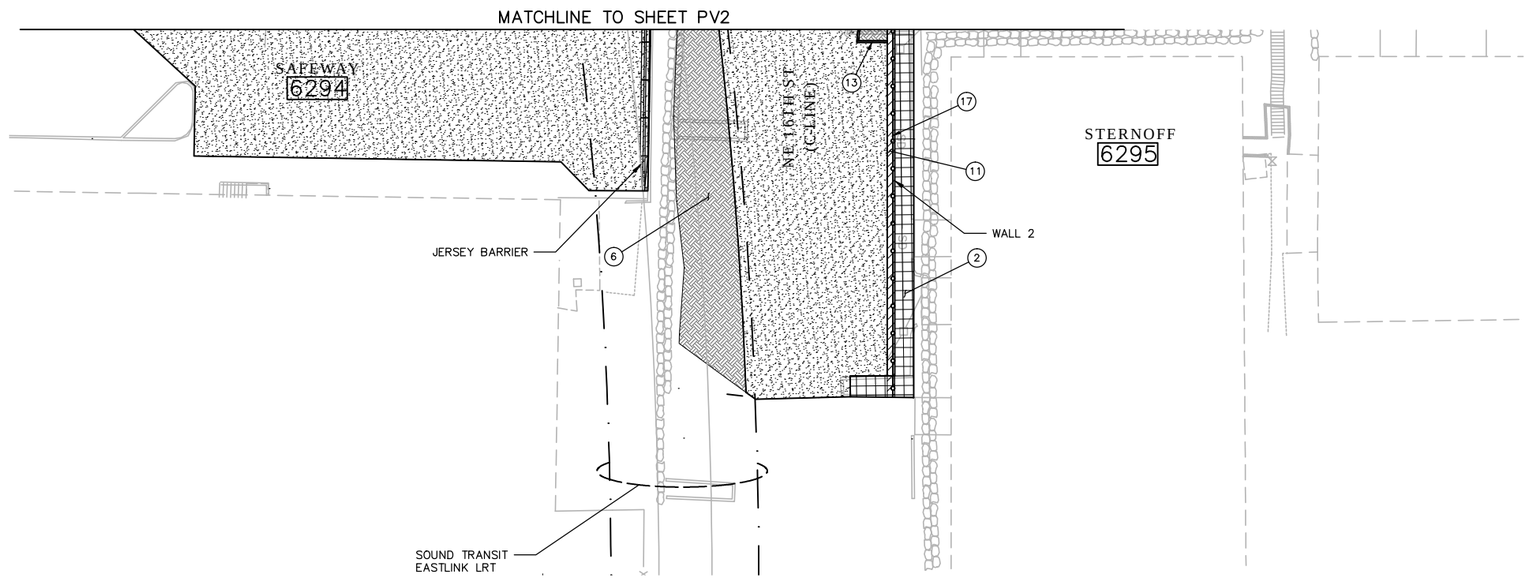

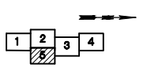

KEY PLAN

20 10 0 20 40
SCALE

PAUL A. FERRIER
STATE OF WASHINGTON
43172
REGISTERED
PROFESSIONAL ENGINEER

NO.	DATE	BY	APPR.	REVISIONS

Approved By

TRANSPORTATION DESIGN MANAGER — DATE
M. ARAKELYAN
PROJECT MANAGER — DATE

S. HAYS — DESIGNED BY — DATE
J. FRYE — DRAWN BY — DATE
G. ROYCROFT — CHECKED BY — DATE

City of Bellevue
TRANSPORTATION DEPARTMENT

HDR

124th Ave NE - NE Spring Blvd to NE Ichigo Way

PAVING PLAN

SHEET NAME PV5

SHT 46 OF 198

95% SUBMITTAL NOT FOR CONSTRUCTION

GENERAL NOTES:

1. UNLESS OTHERWISE NOTED, ALL DIMENSIONS ARE IN FEET AND INCHES.
2. FOR NOTES, SEE PAVING PLANS.

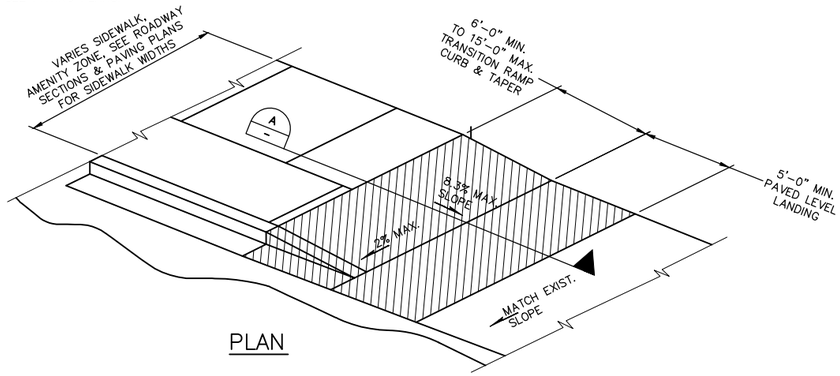

PLAN

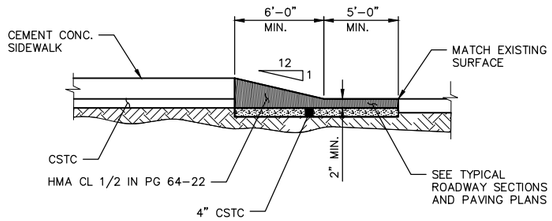

NOTES

1. RAMP, AND CURB TAPER, ALL ASPHALT OVER 4" CSTC.
2. FOR WIDTHS OF SIDEWALK, PAVEMENT AND SHOULDER SEE PAVING PLANS.
3. FOR CURB AND SIDEWALK JOINTS SEE C.O.B. STANDARD.

SECTION A–A

TEMPORARY ASPHALT TRANSITION RAMP DETAIL

N.T.S.

CURB CUT SCHEDULE		
#	STATION	OFFSET
1	A 22+00.50	29.00' RT
2	A 22+24.50	29.00' RT
3	A 22+48.50	29.00' RT
4	A 22+72.50	29.00' RT
5	A 24+27.00	29.00' RT
6	A 24+51.00	29.00' RT
7	A 24+75.00	29.00' RT
8	A 24+99.00	29.00' RT

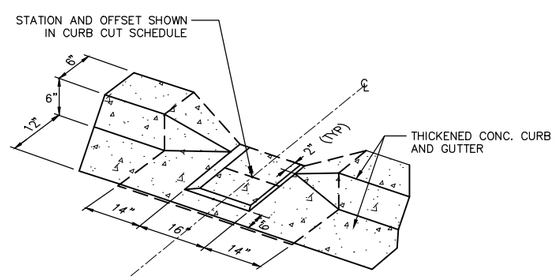

CURB CUT DETAIL – SEE COB DWG NPD–10

N.T.S.

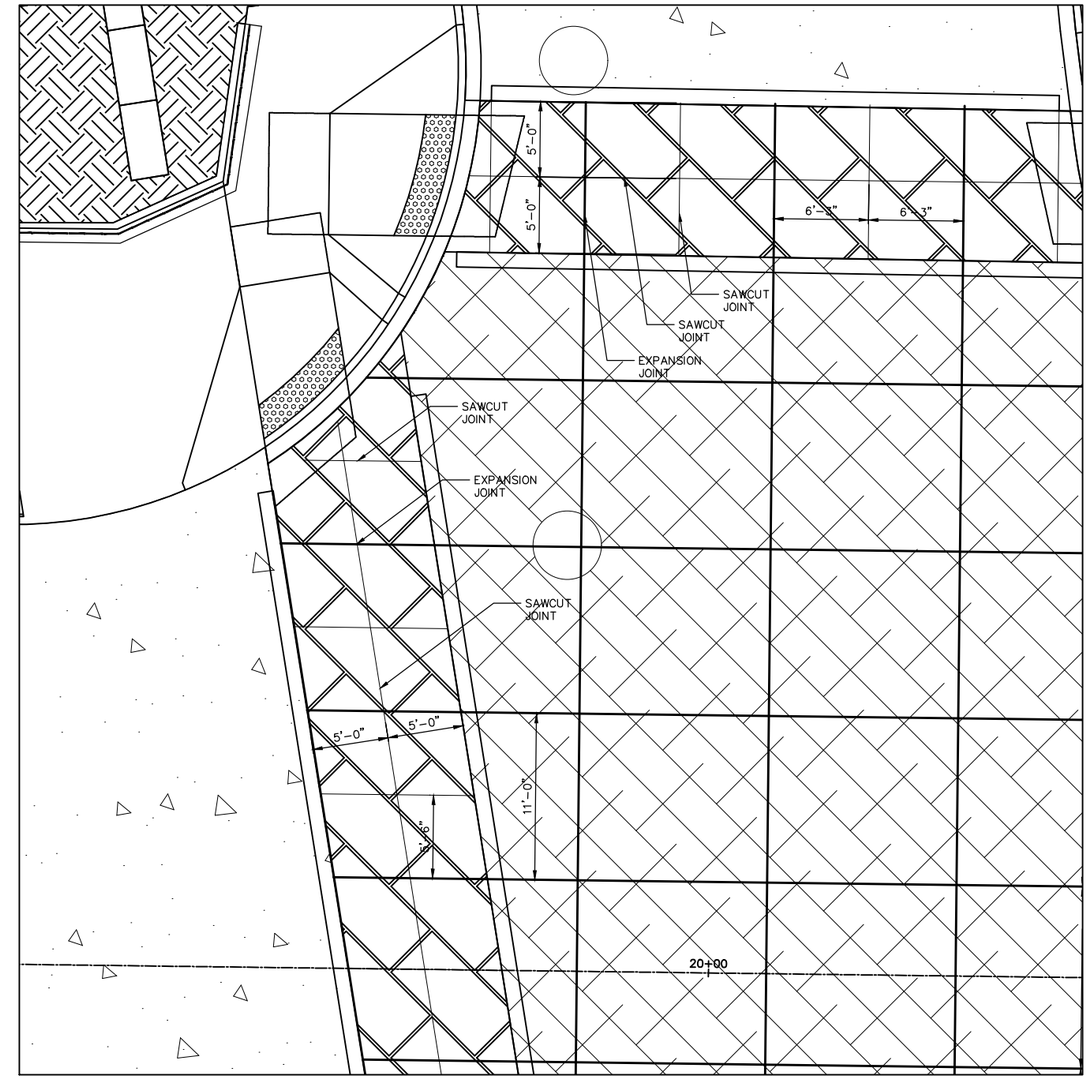

PATTERNED CONC. CROSSWALK DETAIL

N.T.S.

LEGEND

- CEMENT CONC. PAVEMENT
- PATTERNED CONC. (SEE PVD1)
- HMA CL 1/2 IN. PG 70–22 – BUTT JOINT
- LANDSCAPE AREA (SEE LANDSCAPE PLANS)
- PIGMENTED CEMENT CONC.

PAUL A. FERRIER STATE OF WASHINGTON 43172 REGISTERED PROFESSIONAL ENGINEER

NO.	DATE	BY	APPR.	REVISIONS

Approved By

TRANSPORTATION DESIGN MANAGER — DATE
M. ARAKELYAN
PROJECT MANAGER — DATE

S. HAYS — DESIGNED BY — DATE
J. FRYE — DRAWN BY — DATE
G. ROYCROFT — CHECKED BY — DATE

City of Bellevue
TRANSPORTATION DEPARTMENT

HDR

124th Ave NE - NE Spring Blvd to NE Ichigo Way

PAVING DETAILS

SHEET NAME PVD1

SHT 47 OF 198

GENERAL NOTES

1. UNLESS OTHERWISE NOTED, ALL DIMENSIONS ARE IN FEET.
2. SEE APPENDIX FOR CITY OF BELLEVUE AND OTHER STANDARD PLAN DETAILS.
3. EPOXY-COATED REINFORCEMENT BARS SHALL BE USED UNLESS OTHERWISE NOTED.
4. CEMENT CONC. CURB OR CURB AND GUTTER ALONG THE FULL WIDTH OF A DRIVEWAY ENTRANCE SHALL BE CONSTRUCTED WITH AIR ENTRAINED CONC. CLASS 4000 CONFORMING TO WSDOT STD. SPEC. 6-02.

95% SUBMITTAL NOT FOR CONSTRUCTION

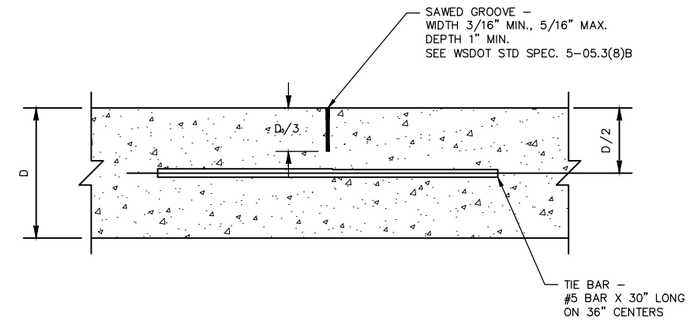

LONGITUDINAL CONTRACTION JOINT

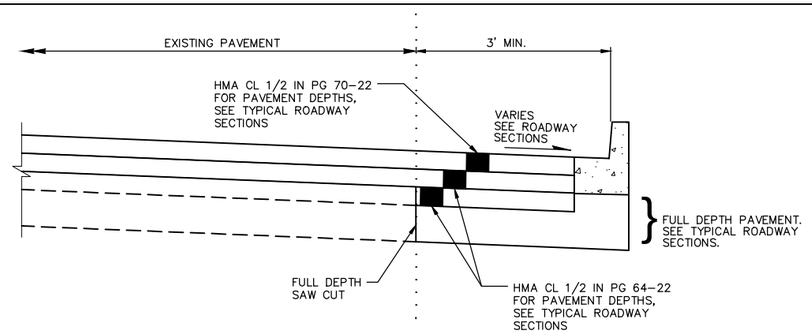

EXISTING ROADWAY PAVEMENT JOINT 2 –
N.T.S.

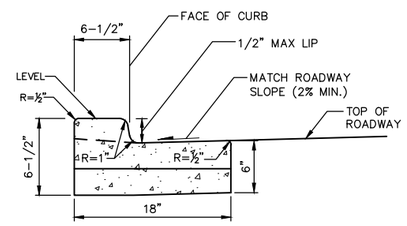

CEMENT CONC. TRAFFIC
CURB AND GUTTER AT DRIVEWAYS 6 –
N.T.S.

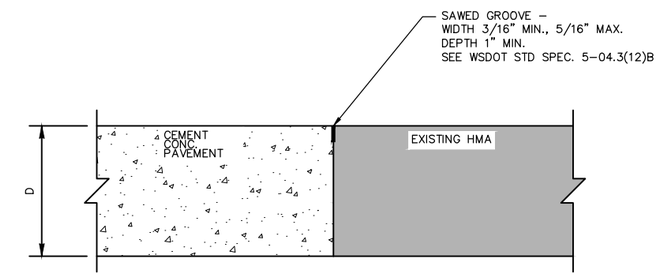

CEMENT CONC. PAVEMENT TO
HMA TRANSVERSE JOINT

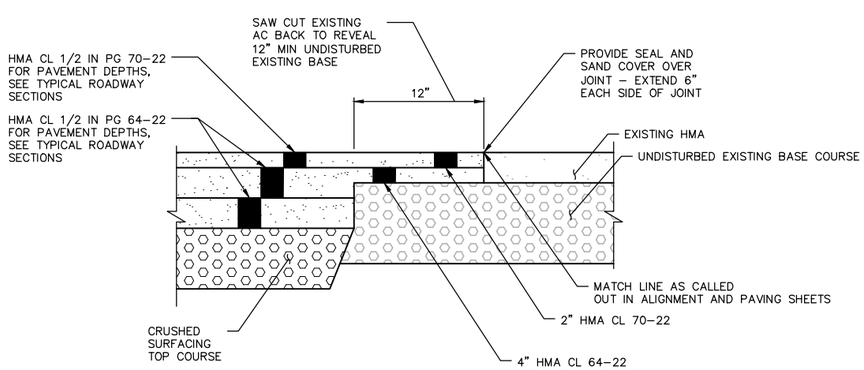

TRANSVERSE BITUMINOUS
PAVEMENT STAGGERED BUTT JOINT 3 –
N.T.S.

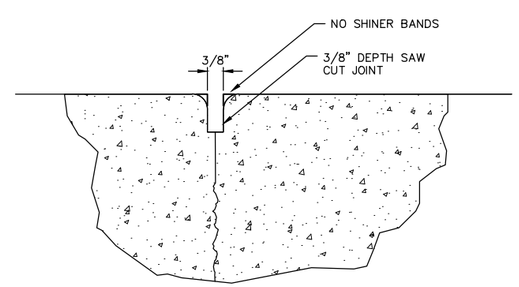

SIDEWALK SAW CUT JOINT 7 –
N.T.S.

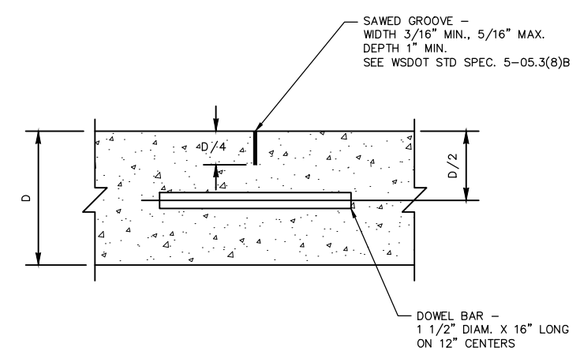

TRANSVERSE CONTRACTION JOINT

PAUL A. FERRER
STATE OF WASHINGTON
43172
REGISTERED
PROFESSIONAL ENGINEER

NO.	DATE	BY	APPR.	REVISIONS

Approved By

TRANSPORTATION DESIGN MANAGER — DATE
M. ARAKELYAN
PROJECT MANAGER — DATE

S. HAYS
DESIGNED BY — DATE
J. FRYE
DRAWN BY — DATE
G. ROYCROFT
CHECKED BY — DATE

CITY OF BELLEVUE WASHINGTON
City of Bellevue
TRANSPORTATION DEPARTMENT

HDR

124th Ave NE - NE Spring Blvd
to NE Ichigo Way

PAVING DETAILS

SHEET NAME PVD2

SHT 48 OF 198

95% SUBMITTAL NOT FOR CONSTRUCTION

GENERAL NOTES:

1. UNLESS OTHERWISE NOTED, ALL DIMENSIONS ARE IN FEET.
2. REBAR AND DIMENSIONS ARE SYMMETRIC ABOUT CENTER OF VAULT.
3. FOR UTILITY VAULT LOCATIONS SEE UTILITY PLANS.
4. PLACE EXPANSION JOINT WHERE VAULT IS ADJACENT TO CONC. SIDEWALK OR WALL.
5. EPOXY-COATED REINFORCEMENT BARS SHALL BE USED UNLESS OTHERWISE NOTED.

THICKENED EDGE SIDEWALK TABLE:

BEGIN STATION	END STATION	LT/RT	H
A 18+53.83	A 18+76.95	RT	22"
A 23+44.13	A 23+49.35	RT	16"
A 28+08.90	A 28+14.76	RT	12"

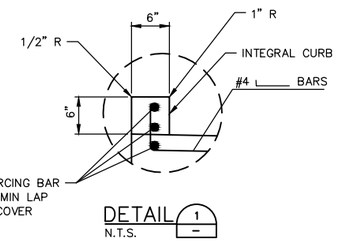

DETAIL 1
N.T.S.

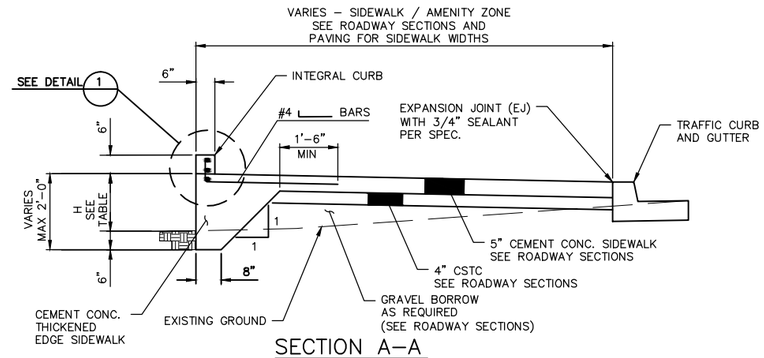

SECTION A–A
N.T.S.

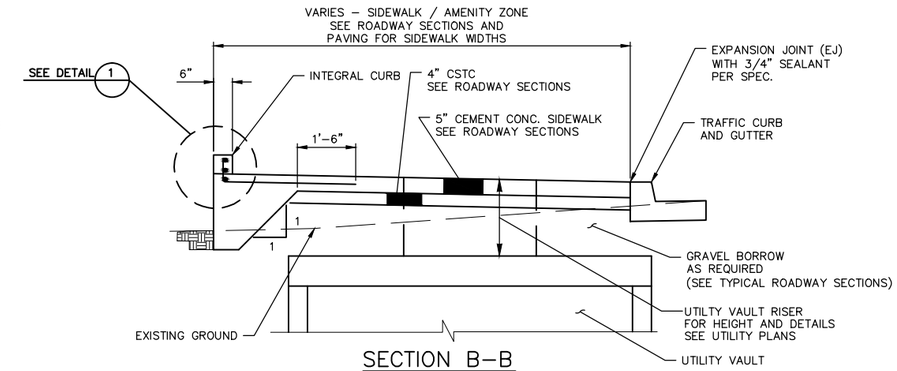

SECTION B–B
N.T.S.

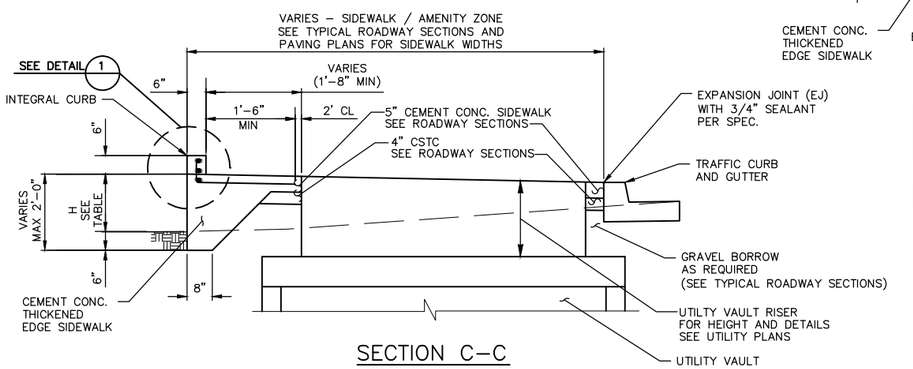

SECTION C–C
N.T.S.

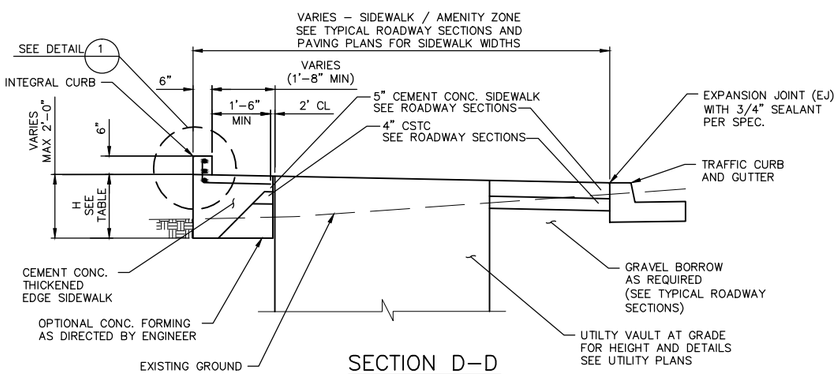

SECTION D–D
N.T.S.

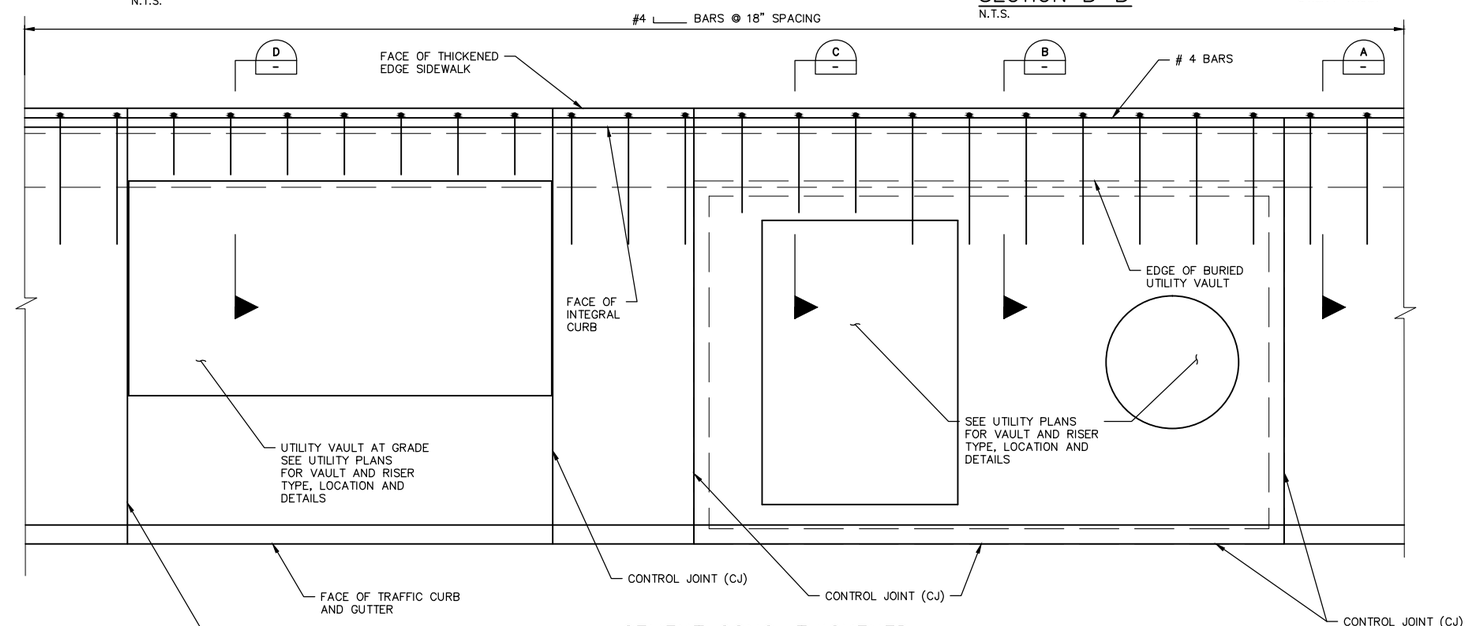

CEMENT CONC. THICKENED EDGE SIDEWALK (H<18-IN) 1
N.T.S.

NO.	DATE	BY	APPR.	REVISIONS

Approved By

TRANSPORTATION DESIGN MANAGER — DATE
M. ARAKELYAN
PROJECT MANAGER — DATE

S. HAYS — DESIGNED BY — DATE
J. FRYE — DRAWN BY — DATE
G. ROYCROFT — CHECKED BY — DATE

City of Bellevue
TRANSPORTATION DEPARTMENT

HDR

124th Ave NE - NE Spring Blvd to NE Ichigo Way

PAVING DETAILS

SHEET NAME PVD3

SHT 49 OF 198

95% SUBMITTAL NOT FOR CONSTRUCTION

GENERAL NOTES

1. UNLESS OTHERWISE NOTED, ALL DIMENSIONS ARE IN FEET.
2. EPOXY-COATED REINFORCEMENT BARS SHALL BE USED UNLESS OTHERWISE NOTED.

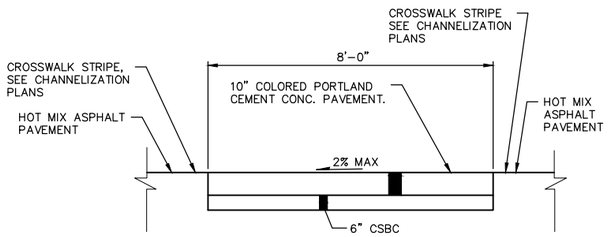

CROSSWALK PAVING DETAIL 1/–
N.T.S.

CURB RAMP NOTES:

1. BROOM FINISH PERPENDICULAR TO THE DIRECTION OF PEDESTRIAN TRAVEL.
2. STANDARD 3/8" FULL DEPTH EXPANSION JOINT.
3. NO LIP AT GUTTER LINE.
4. CATCH BASINS & INLETS SHALL BE INSTALLED A MINIMUM OF 12" LATERALLY FROM THE BASE OF CURB RAMP LANDING.
5. DETECTABLE WARNING PATTERN (TRUNCATED DOMES) SHALL BE FLUSH WITH RAMP TEXTURE
6. CONC. SHALL BE A MINIMUM OF 5" NOT INCLUDING DETECTABLE WARNING PATTERN (TRUNCATED DOMES).
7. NO LAMPBLACK SHALL BE PLACED IN CURB RAMPS.
8. FOR DETECTABLE WARNING PATTERN DETAIL, SEE WSDOT STANDARD PLAN F-45.10.

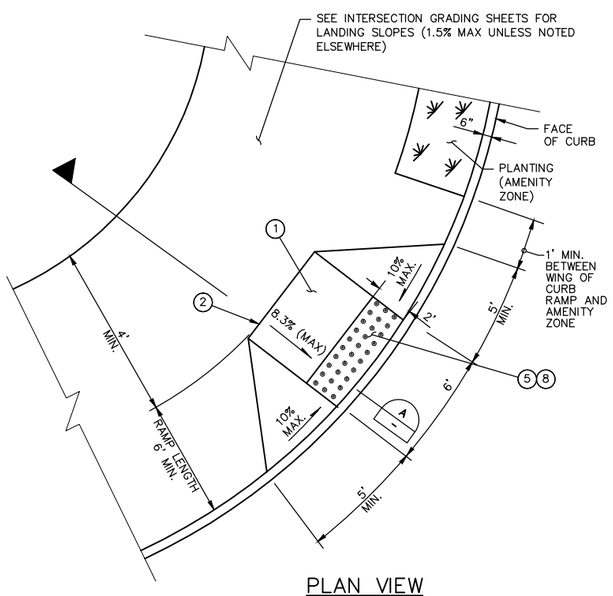

PLAN VIEW

6' CURB RAMP: TYPE 1A 2/–
N.T.S.

GENERAL NOTES

1. "X" IS 6' FOR EAST TO WEST RAMPS.
   "X" IS 8' FOR NORTH TO SOUTH RAMPS.

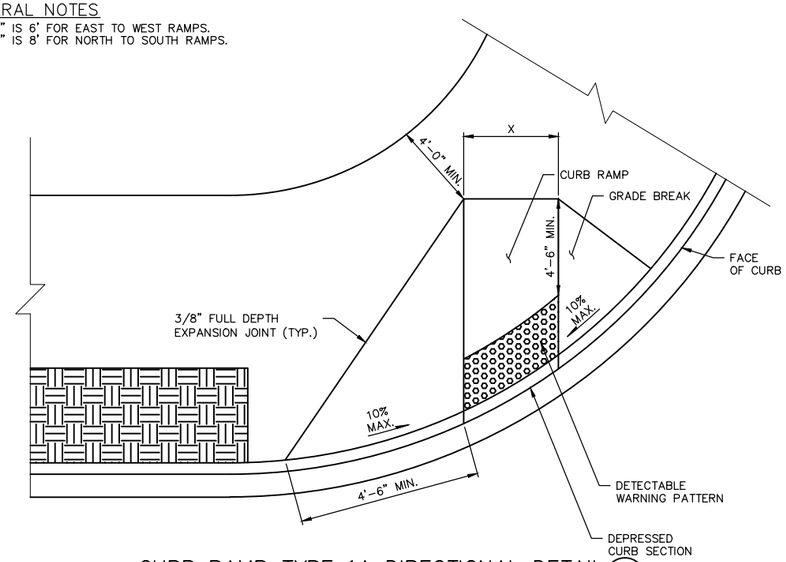

CURB RAMP TYPE 1A DIRECTIONAL DETAIL 3/–
N.T.S.

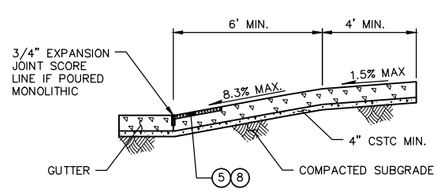

SECTION A-A
N.T.S.

NO.	DATE	BY	APPR.	REVISIONS

Approved By

TRANSPORTATION DESIGN MANAGER — DATE
M. ARAKELYAN
PROJECT MANAGER — DATE

S. HAYS — DESIGNED BY — DATE
J. FRYE — DRAWN BY — DATE
G. ROYCROFT — CHECKED BY — DATE

City of Bellevue
TRANSPORTATION DEPARTMENT

HDR

124th Ave NE - NE Spring Blvd to NE Ichigo Way

PAVING DETAILS

SHEET NAME PVD4

SHT 50 OF 198

GENERAL NOTES

1. UNLESS OTHERWISE NOTED, ALL DIMENSIONS ARE IN FEET.

95% SUBMITTAL NOT FOR CONSTRUCTION

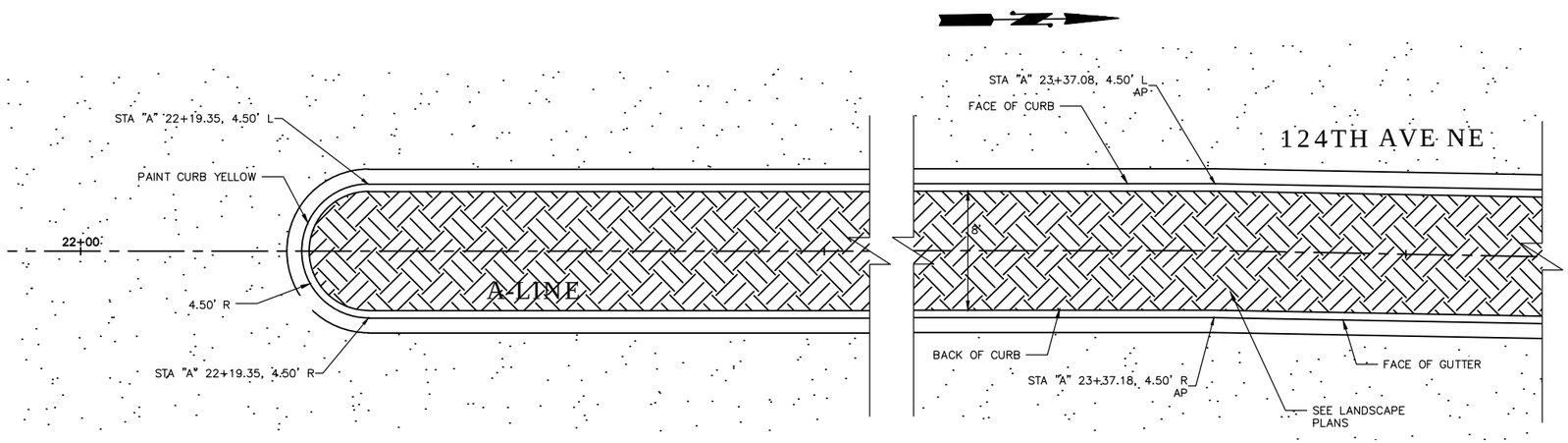

TRAFFIC ISLAND DETAIL 1

SCALE 1"=5'

SEE ROADWAY CENTERLINE PROFILE SHEETS AL2–AL4 FOR ELEVATION INFORMATION

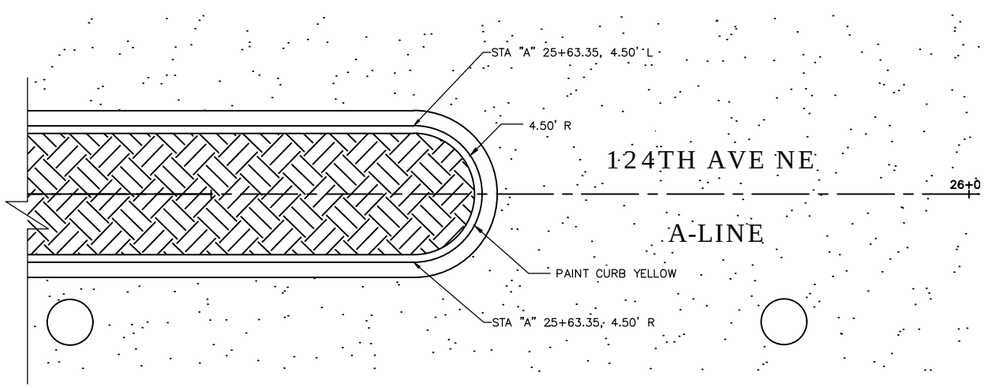

TRAFFIC ISLAND DETAIL 2

SCALE 1"=5'

SEE ROADWAY CENTERLINE PROFILE SHEET AL2–AL4 FOR ELEVATION INFORMATION

NO.	DATE	BY	APPR.	REVISIONS

Approved By

TRANSPORTATION DESIGN MANAGER — DATE

M. ARAKELYAN

PROJECT MANAGER — DATE

S. HAYS — DESIGNED BY — DATE

J. FRYE — DRAWN BY — DATE

G. ROYCROFT — CHECKED BY — DATE

City of Bellevue

TRANSPORTATION DEPARTMENT

HDR

124th Ave NE - NE Spring Blvd to NE Ichigo Way

PAVING DETAILS

SHEET NAME PVD5

SHT 51 OF 198

GENERAL NOTES

1. UNLESS OTHERWISE NOTED, ALL DIMENSIONS ARE IN FEET.

95% SUBMITTAL NOT FOR CONSTRUCTION

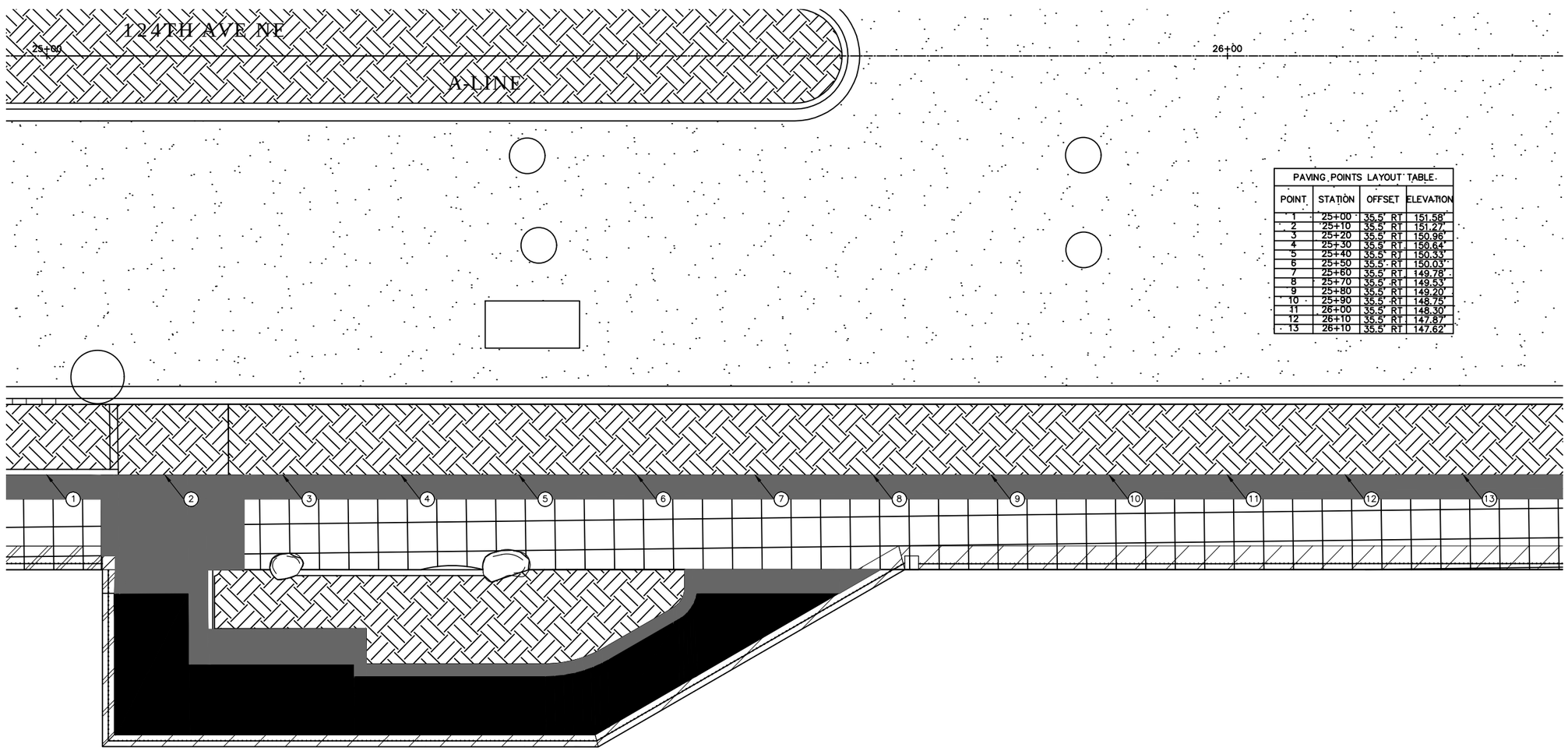

PAVING POINTS LAYOUT TABLE

POINT	STATION	OFFSET	ELEVATION
1	25+00	35.5' RT	151.58'
2	25+10	35.5' RT	151.27'
3	25+20	35.5' RT	150.96'
4	25+30	35.5' RT	150.64'
5	25+40	35.5' RT	150.33'
6	25+50	35.5' RT	150.03'
7	25+60	35.5' RT	149.78'
8	25+70	35.5' RT	149.53'
9	25+80	35.5' RT	149.20'
10	25+90	35.5' RT	148.75'
11	26+00	35.5' RT	148.30'
12	26+10	35.5' RT	147.87'
13	26+10	35.5' RT	147.62'

PLANTER GRADING DETAIL

SCALE 1"=5'

SEE ROADWAY CENTERLINE PROFILE SHEET AL3–AL4 FOR ELEVATION INFORMATION

PAUL A. FERRIER — STATE OF WASHINGTON — 43172 — REGISTERED PROFESSIONAL ENGINEER

NO.	DATE	BY	APPR.	REVISIONS

Approved By

TRANSPORTATION DESIGN MANAGER — DATE

M. ARAKELYAN

PROJECT MANAGER — DATE

S. HAYS — DESIGNED BY — DATE

J. FRYE — DRAWN BY — DATE

G. ROYCROFT — CHECKED BY — DATE

City of Bellevue — TRANSPORTATION DEPARTMENT

HDR

124th Ave NE - NE Spring Blvd to NE Ichigo Way

PAVING DETAILS

SHEET NAME PVD6

SHT 52 OF 198

GENERAL NOTES

1. UNLESS OTHERWISE NOTED, ALL DIMENSIONS ARE IN FEET.

95% SUBMITTAL NOT FOR CONSTRUCTION

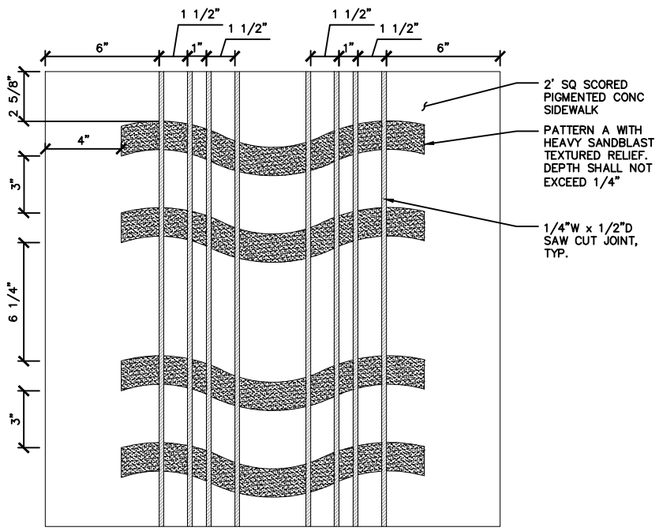

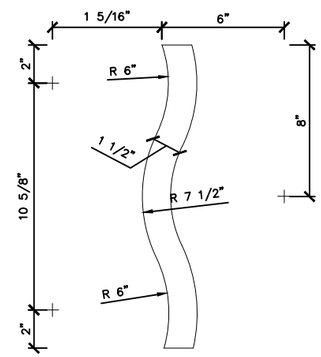

PATTERN A

TYPCIAL CONC. SIDEWALK SANDBLASTING TEMPLATE (3 / –)

SCALE: 3"=1'

STATION LOCATION	QTY (SF)
A–LINE STA 19+42.28 L29.25'	28
A–LINE STA 19+55.43 L29.34'	28
C–LINE STA 69+33.35 R25.5'	25
C–LINE STA 69+33.0 L16.08'	32
A–LINE STA 19+52.38 R29.73'	24
A–LINE STA 19+65.57 R29.73'	24
A–LINE STA 20.70.85 R29.73'	28
A–LINE STA 25+04 R35.5'	15
A–LINE STA 25+16 R35.5'	15

CONC. SIDEWALK SANDBLASTING STATION LOCATION TABLE (4 / –)

SCALE: N.T.S.

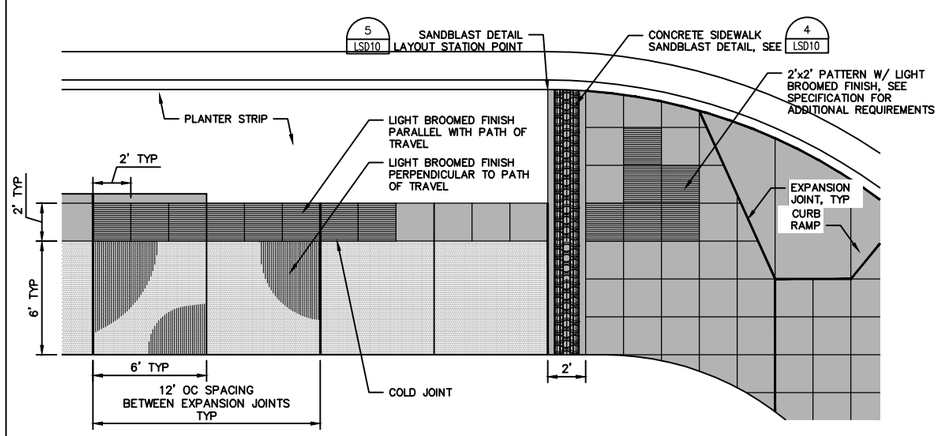

NOTE: TACTILE WARNING STRIP COLOR PER SPECIFICATIONS

– PIGMENTED CONCRETE SIDEWALK

– CEMENT CONCRETE SIDEWALK

TYPICAL CEMENT CONC. SIDEWALK SCORING AND COLORING DETAIL (5 / –)

SCALE: N.T.S.

NO.	DATE	BY	APPR.	REVISIONS

Approved By

TRANSPORTATION DESIGN MANAGER — DATE

M. ARAKELYAN

PROJECT MANAGER — DATE

S. HAYS — DESIGNED BY — DATE

J. FRYE — DRAWN BY — DATE

G. ROYCROFT — CHECKED BY — DATE

City of Bellevue

TRANSPORTATION DEPARTMENT

HDR

124th Ave NE - NE Spring Blvd to NE Ichigo Way

URBAN DESIGN DETAILS

SHEET NAME PVD7

SHT 53 OF 198

GENERAL NOTES

1. UNLESS OTHERWISE NOTED, ALL DIMENSIONS ARE IN FEET.

95% SUBMITTAL NOT FOR CONSTRUCTION

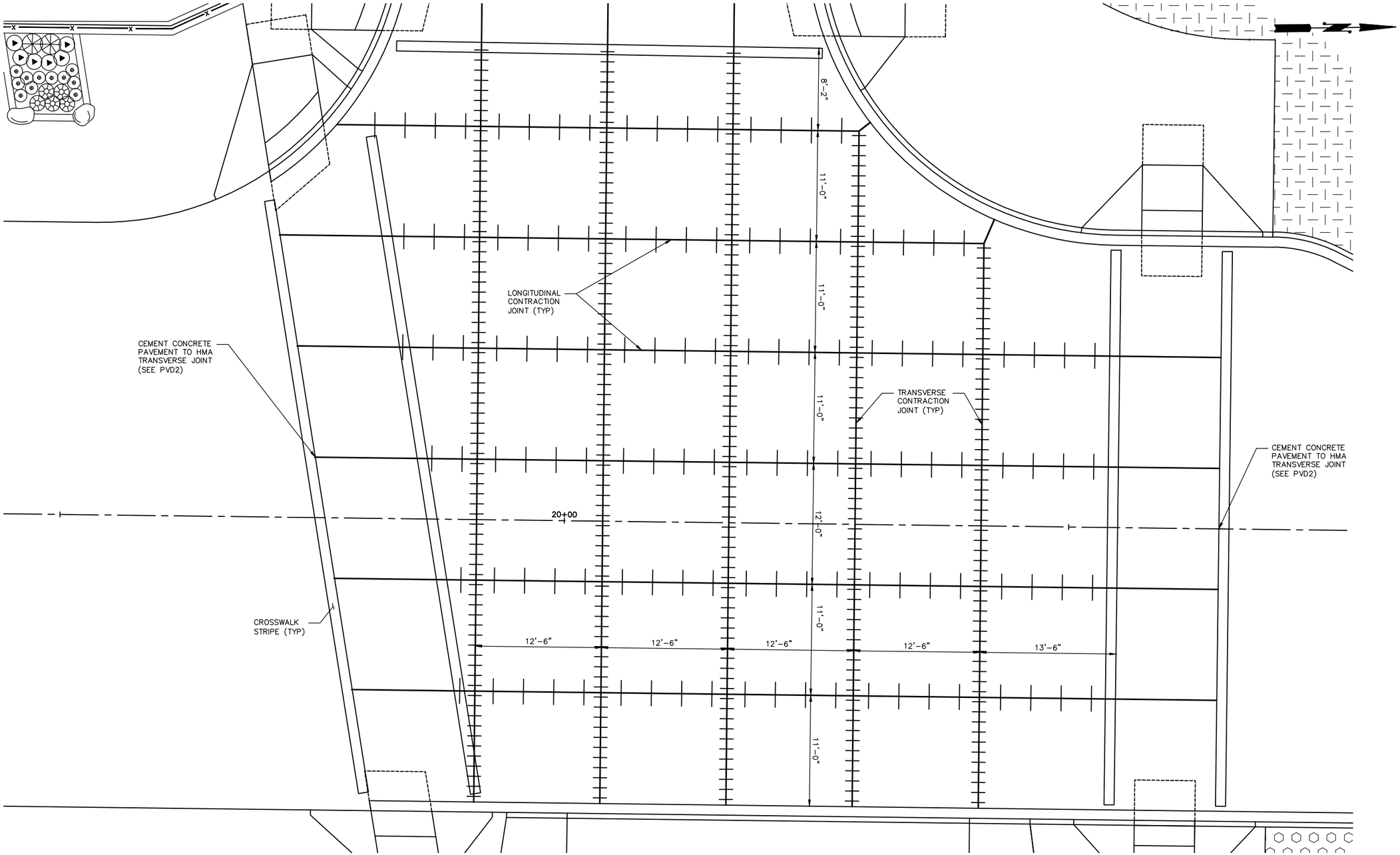

CEMENT CONCRETE PAVEMENT DETAIL – APPROACH

SCALE: 5"=1'

NO.	DATE	BY	APPR.	REVISIONS

Approved By

TRANSPORTATION DESIGN MANAGER — DATE
M. ARAKELYAN
PROJECT MANAGER — DATE

S. HAYS — DESIGNED BY — DATE
J. FRYE — DRAWN BY — DATE
G. ROYCROFT — CHECKED BY — DATE

City of Bellevue
TRANSPORTATION DEPARTMENT

HDR

124th Ave NE - NE Spring Blvd to NE Ichigo Way

PAVING DETAILS

SHEET NAME PVD8

SHT 54 OF 198

GENERAL NOTES:

1. UNLESS OTHERWISE NOTED, ALL DIMENSIONS ARE IN FEET.
2. ALL ELEVATIONS ARE FINISHED GRADE.
3. ALL CURB RAMPS TO COMPLY WITH COB STD DWG TE-12B CURB RAMP TYPE 1A
4. CURB RETURN FLOWLINE POINTS ARE GUTTER ELEVATIONS, ALL OTHER POINTS REPRESENT TOP OF CURB/SIDEWALK.

SECTION 28, T. 25 N., R5E., W.M.
KING COUNTY

95% SUBMITTAL NOT FOR CONSTRUCTION

PAVING POINT TABLE			
POINT NO.	STATION	OFFSET	ELEVATION
1	C 68+60.00	45.65' RT	170.17'
2	C 68+65.58	44.75' RT	170.34'
3	C 68+81.03	41.33' RT	171.87'
4	C 68+94.85	37.15' RT	171.34'
5	C 69+08.37	32.67' RT	171.73'
6	C 69+22.23	27.46' RT	171.95'
7	C 68+60.00	17.10' RT	170.33'
8	C 68+60.00	12.14' LT	170.17'
9	C 68+60.39	34.01' LT	169.78'
10	C 68+78.31	26.99' LT	170.18'
11	C 69+16.21	16.94' LT	171.06'
12	A 19+07.62	29.00' LT	173.52'
13	A 19+27.62	28.91' LT	173.27'
14	A 19+47.63	28.91' LT	172.92'
15	A 19+67.62	29.00' LT	172.48'
16	A 19+87.62	29.00' LT	171.94'
17	A 20+07.62	29.00' LT	171.34'
18	A 20+27.62	29.00' LT	170.59'
19	A 20+47.62	29.00' LT	169.69'
20	A 20+67.60	28.36' LT	168.65'
21	A 20+87.70	22.45' LT	167.34'

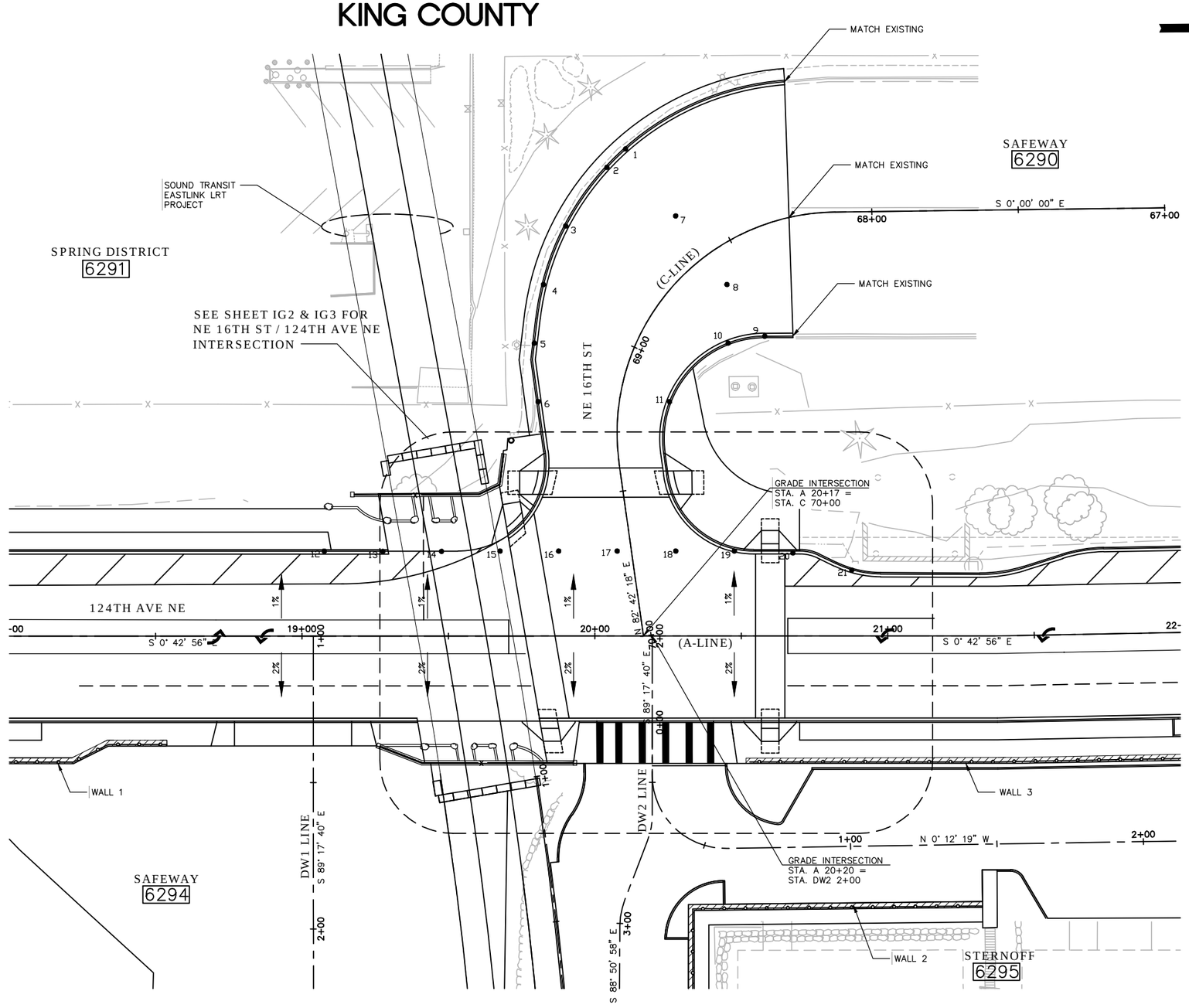

20 10 0 20 40
SCALE

NO.	DATE	BY	APPR.	REVISIONS

Approved By

TRANSPORTATION DESIGN MANAGER — DATE
M. ARAKELYAN
PROJECT MANAGER — DATE

S. HAYS — DESIGNED BY — DATE
J. FRYE — DRAWN BY — DATE
G. ROYCROFT — CHECKED BY — DATE

City of Bellevue
TRANSPORTATION DEPARTMENT

HDR

124th Ave NE - NE Spring Blvd to NE Ichigo Way

INTERSECTION GRADING PLAN
NE 16TH ST / 124TH AVE NE

SHEET NAME IG1

SHT 55 OF 198

GENERAL NOTES:

1. UNLESS OTHERWISE NOTED, ALL DIMENSIONS ARE IN FEET.
2. ALL ELEVATIONS ARE FINISHED GRADE.
3. ALL CURB RAMPS TO COMPLY WITH COB STD DWG TE-12B CURB RAMP TYPE 1A AND TO BE VERIFIED WITH ADA STANDARDS.
4. CURB RETURN FLOWLINE POINTS ARE GUTTER ELEVATIONS, ALL OTHER POINTS REPRESENT TOP OF CURB/SIDEWALK.

SECTION 28, T. 25 N., R5E., W.M.
KING COUNTY

95% SUBMITTAL NOT FOR CONSTRUCTION

CURB RAMP POINT TABLE

POINT NO.	STATION	OFFSET	ELEVATION
1	A 19+70.27	67.45' LT	172.69'
2	A 19+81.66	69.03' LT	172.52'
3	A 19+82.58	62.33' LT	172.53'
4	A 19+83.15	56.39' LT	172.05'
5	A 19+81.33	48.39' LT	172.07'
6	A 19+79.00	44.58' LT	172.61'
7	A 19+74.33	56.39' LT	172.67'
8	A 19+74.33	48.39' LT	172.69'
9	A 19+70.33	56.39' LT	172.73'
10	A 19+70.33	48.39' LT	172.76'
11	A 19+77.94	42.83' LT	172.63'
12	A 19+75.63	39.00' LT	172.20'
13	A 19+70.33	34.34' LT	172.32'
14	A 19+64.89	31.89' LT	172.99'
15	A 19+74.44	45.90' LT	172.69'
16	A 19+68.53	44.88' LT	172.82'
17	A 19+73.76	49.84' LT	172.69'
18	A 19+67.85	48.82' LT	172.81'
19	A 20+33.48	91.51' LT	171.19'
20	A 20+23.97	62.38' LT	171.59'
21	A 20+24.30	56.37' LT	171.01'
22	A 20+26.16	48.39' LT	170.85'
23	A 20+29.25	43.29' LT	171.15'
24	A 20+33.15	56.39' LT	171.53'
25	A 20+33.16	48.39' LT	171.37'
26	A 20+37.15	56.40' LT	171.58'
27	A 20+37.18	48.44' LT	171.42'
28	A 20+50.92	29.68' LT	170.03'
29	A 20+56.87	29.00' LT	169.25'
30	A 20+62.87	29.00' LT	168.92'
31	A 20+68.87	29.50' LT	169.07'
32	A 20+56.87	36.00' LT	169.83'
33	A 20+62.87	36.00' LT	169.51'
34	A 20+56.87	40.00' LT	169.89'
35	A 20+62.87	40.00' LT	169.57'
36	A 20+69.84	48.56' LT	169.30'

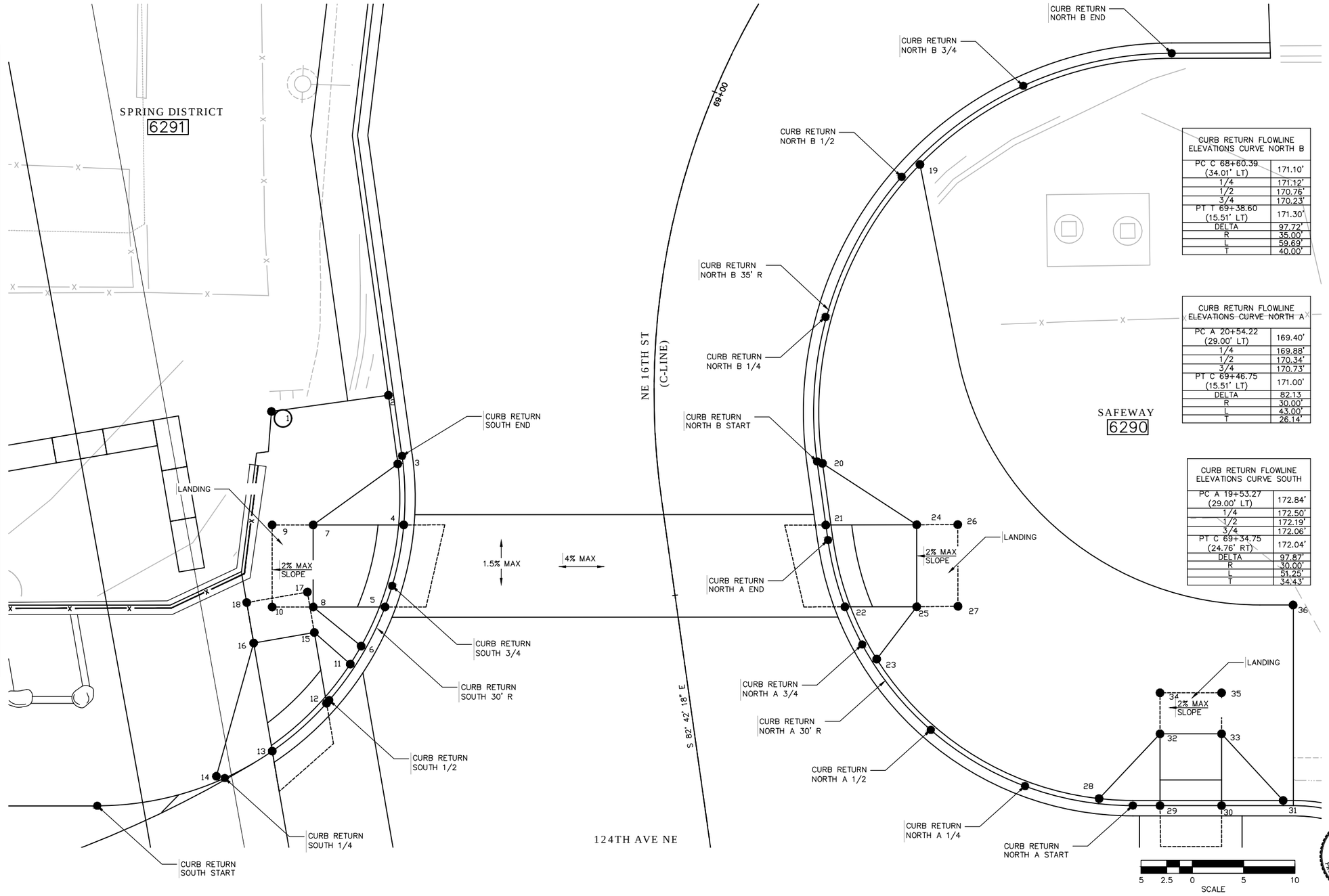

CURB RETURN FLOWLINE ELEVATIONS CURVE NORTH B	
PC C 68+60.39 (34.01' LT)	171.10'
1/4	171.12'
1/2	170.76'
3/4	170.23'
PT T 69+38.60 (15.51' LT)	171.30'
DELTA	97.72'
R	35.00'
L	59.69'
T	40.00'

CURB RETURN FLOWLINE ELEVATIONS CURVE NORTH A	
PC A 20+54.22 (29.00' LT)	169.40'
1/4	169.88'
1/2	170.34'
3/4	170.73'
PT C 69+46.75 (15.51' LT)	171.00'
DELTA	82.13
R	30.00'
L	43.00'
T	26.14'

CURB RETURN FLOWLINE ELEVATIONS CURVE SOUTH	
PC A 19+53.27 (29.00' LT)	172.84'
1/4	172.50'
1/2	172.19'
3/4	172.06'
PT C 69+34.75 (24.76' RT)	172.04'
DELTA	97.87'
R	30.00'
L	51.25'
T	34.43'

NO.	DATE	BY	APPR.	REVISIONS

Approved By

TRANSPORTATION DESIGN MANAGER — DATE
M. ARAKELYAN
PROJECT MANAGER — DATE

S. HAYS — DESIGNED BY — DATE
J. FRYE — DRAWN BY — DATE
G. ROYCROFT — CHECKED BY — DATE

City of Bellevue
TRANSPORTATION DEPARTMENT

HDR

124th Ave NE - NE Spring Blvd to NE Ichigo Way

INTERSECTION GRADING PLAN
NE 16TH ST / 124TH AVE NE

SHEET NAME **IG2**

GENERAL NOTES:

1. UNLESS OTHERWISE NOTED, ALL DIMENSIONS ARE IN FEET.
2. ALL ELEVATIONS ARE FINISHED GRADE.
3. ALL CURB RAMPS TO COMPLY WITH COB STD DWG TE-12B CURB RAMP TYPE 1A AND TO BE VERIFIED WITH ADA STANDARDS.
4. CURB RETURN FLOWLINE POINTS ARE GUTTER ELEVATIONS, ALL OTHER POINTS REPRESENT TOP OF CURB/SIDEWALK.

SECTION 28, T. 25 N., R5E., W.M.
KING COUNTY

95% SUBMITTAL NOT FOR CONSTRUCTION

CURB RAMP POINT TABLE			
POINT NO.	STATION	OFFSET	ELEVATION
1	A 19+75.20	29.51' RT	171.96'
2	A 19+81.19	29.00' RT	171.30'
3	A 19+87.22	29.00' RT	171.13'
4	A 19+93.23	29.49' RT	171.44'
5	A 19+82.38	35.90' RT	171.85'
6	A 19+88.41	35.90' RT	171.68'
7	A 19+83.06	39.84' RT	171.89'
8	A 19+89.09	39.84' RT	171.72'
9	A 20+50.86	29.50' RT	169.24'
10	A 20+56.86	29.00' RT	168.48'
11	A 20+62.86	29.00' RT	168.18'
12	A 20+68.86	29.50' RT	168.38'
13	A 20+56.86	36.00' RT	169.06'
14	A 20+62.86	36.00' RT	168.77'
15	A 20+56.86	40.00' RT	169.12'
16	A 20+62.86	40.00' RT	168.83'

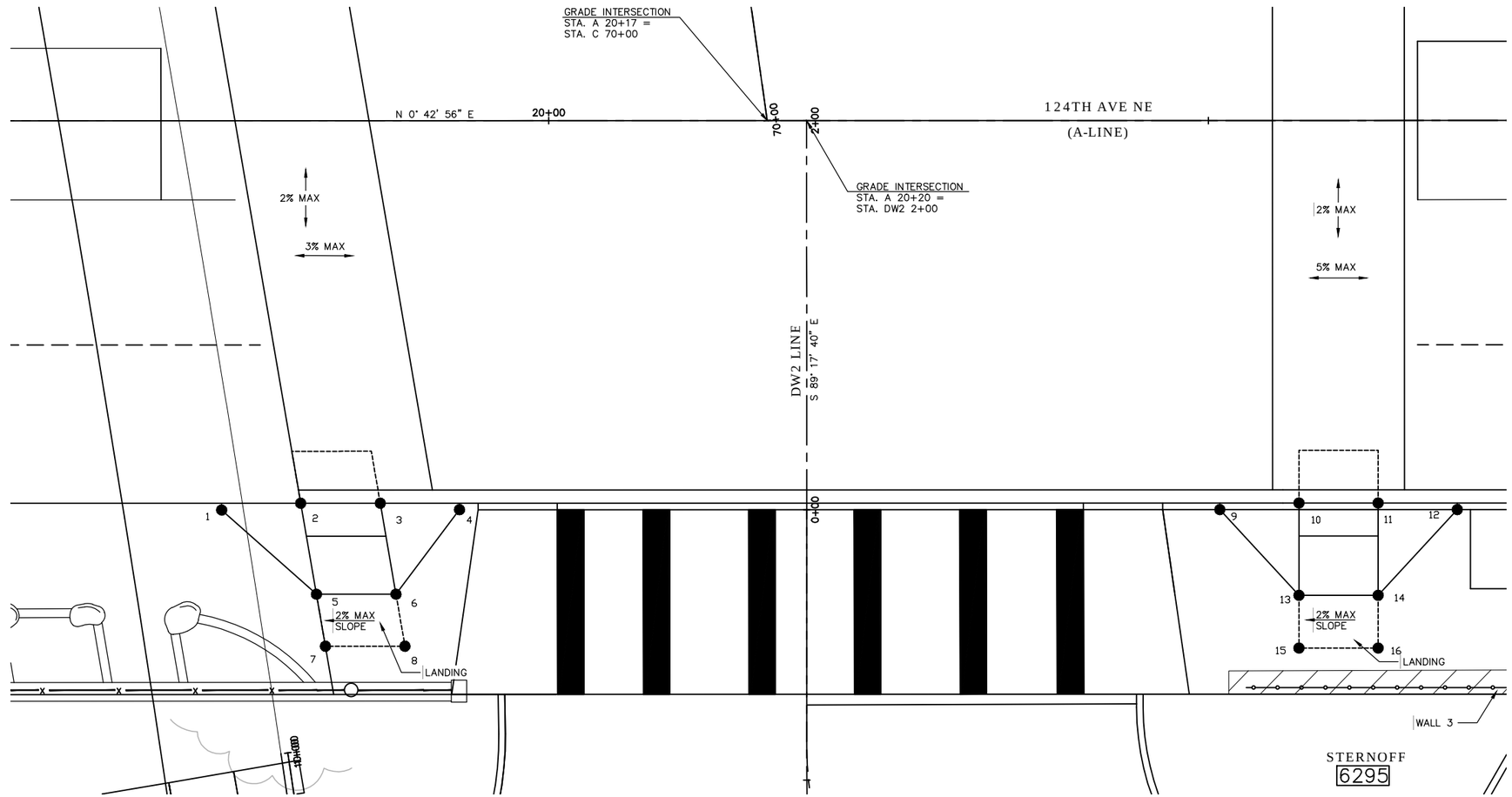

5 2.5 0 5 10
SCALE

NO.	DATE	BY	APPR.	REVISIONS

Approved By

TRANSPORTATION DESIGN MANAGER — DATE
M. ARAKELYAN
PROJECT MANAGER — DATE

S. HAYS — DESIGNED BY — DATE
J. FRYE — DRAWN BY — DATE
G. ROYCROFT — CHECKED BY — DATE

City of Bellevue
TRANSPORTATION DEPARTMENT

HDR

124th Ave NE - NE Spring Blvd to NE Ichigo Way

INTERSECTION GRADING PLAN
NE 16TH ST / 124TH AVE NE

SHEET NAME IG3

SHT 57 OF 198

GENERAL NOTES:

1. UNLESS OTHERWISE NOTED, ALL DIMENSIONS ARE IN FEET.
2. ALL ELEVATIONS ARE FINISHED GRADE.
3. ALL CURB RAMPS TO COMPLY WITH COB STD DWG TE-12B CURB RAMP TYPE 1A AND TO BE VERIFIED WITH ADA STANDARDS.
4. CURB RETURN FLOWLINE POINTS ARE GUTTER ELEVATIONS, ALL OTHER POINTS REPRESENT TOP OF CURB/SIDEWALK.

SECTION 28, T. 25 N., R5E., W.M.
KING COUNTY

95% SUBMITTAL NOT FOR CONSTRUCTION

CURB RAMP POINT TABLE

POINT NO.	STATION	OFFSET	ELEVATION
1	A 28+69.31	53.67' LT	141.36'
2	A 28+70.15	48.95' LT	141.21'
3	A 28+73.49	41.07' LT	140.52'
4	A 28+77.81	36.90' LT	140.45'
5	A 28+85.29	33.84' LT	140.90'
6	A 28+78.22	45.84' LT	140.61'
7	A 28+82.44	41.70' LT	140.55'
8	A 28+87.26	39.85' LT	140.55'
9	A 28+75.79	50.77' LT	140.55'
10	A 28+75.12	53.74' LT	140.55'
11	A 28+41.94	53.36' LT	140.55'
12	A 28+13.31	29.00' LT	140.55'

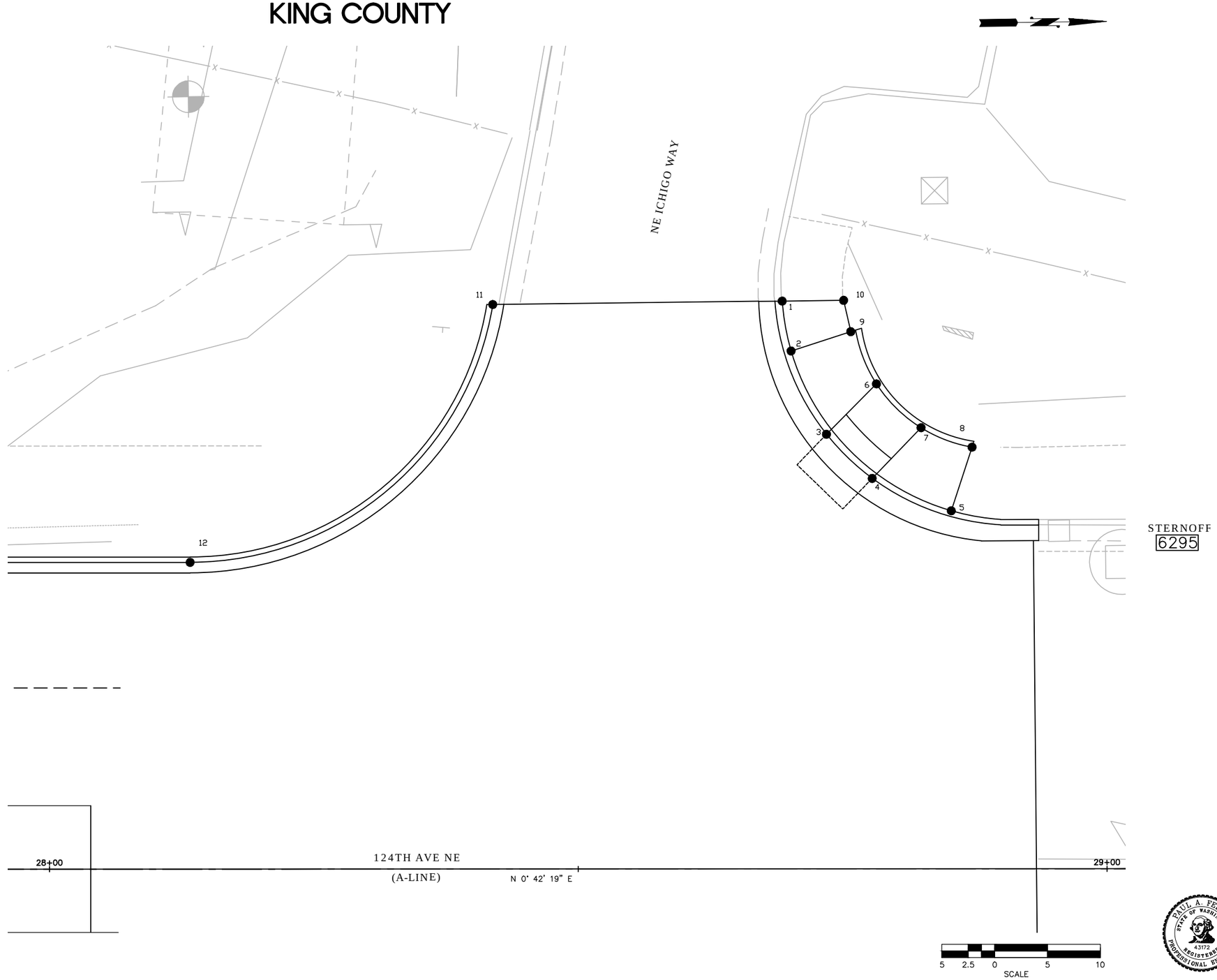

NO.	DATE	BY	APPR.	REVISIONS

Approved By

TRANSPORTATION DESIGN MANAGER — DATE
M. ARAKELYAN
PROJECT MANAGER — DATE

S. HAYS — DESIGNED BY — DATE
J. FRYE — DRAWN BY — DATE
G. ROYCROFT — CHECKED BY — DATE

City of Bellevue
TRANSPORTATION DEPARTMENT

124th Ave NE - NE Spring Blvd to NE Ichigo Way

INTERSECTION GRADING PLAN
NE 16TH ST / 124TH AVE NE

SHEET NAME IG4

SHT 58 OF 198

GENERAL NOTES:

1. UNLESS OTHERWISE NOTED, ALL DIMENSIONS ARE IN FEET.
2. ALL ELEVATIONS ARE FINISHED GRADE.
3. ALL CURB RAMPS TO COMPLY WITH COB STD DWG TE-12B CURB RAMP TYPE 1A AND TO BE VERIFIED WITH ADA STANDARDS.
4. CURB RETURN FLOWLINE POINTS ARE GUTTER ELEVATIONS, ALL OTHER POINTS REPRESENT TOP OF CURB/SIDEWALK.

SECTION 28, T. 25 N., R5E., W.M.
KING COUNTY

95% SUBMITTAL NOT FOR CONSTRUCTION

CURB RAMP POINT TABLE

POINT NO.	STATION	OFFSET	ELEVATION
1	A 28+13.90	29.50' RT	141.89'
2	A 28+21.88	31.05' RT	141.24'
3	A 28+26.52	34.86' RT	141.14'
4	A 28+29.69	42.48' RT	141.49'
5	A 28+17.66	36.22' RT	141.34'
6	A 28+22.32	40.02' RT	141.24'
7	A 28+30.05	47.74' RT	141.39'
8	A 28+67.49	45.28' RT	141.84'
9	A 28+68.36	40.32' RT	141.81'
10	A 28+71.06	32.77' RT	141.20'
11	A 28+74.62	27.91' RT	141.11'
12	A 28+83.10	24.01' RT	141.45'
13	A 28+93.57	23.68' RT	141.02'
14	A 28+76.65	36.34' RT	141.30'
15	A 28+80.19	31.53' RT	141.21'

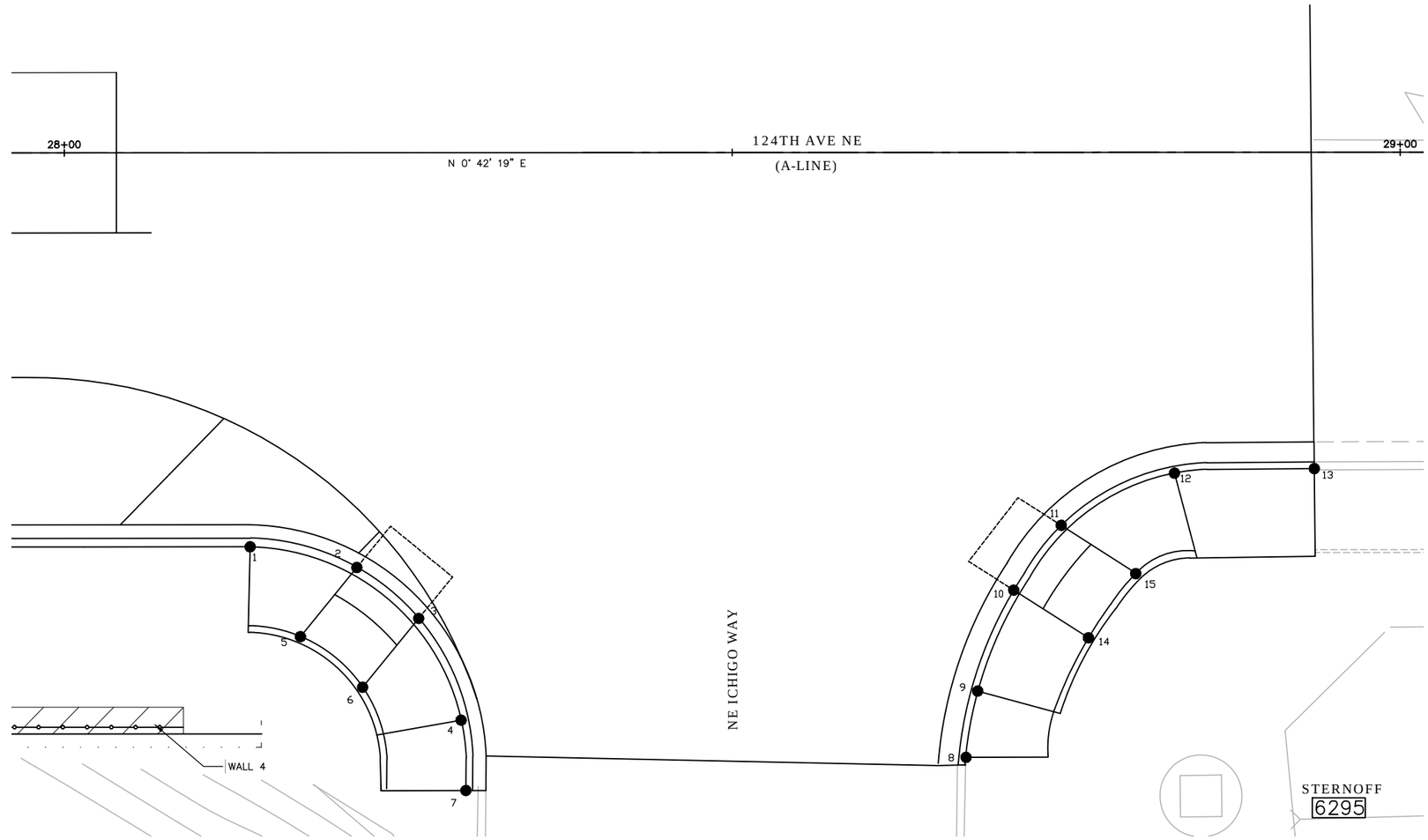

5 2.5 0 5 10
SCALE

NO.	DATE	BY	APPR.	REVISIONS

Approved By

TRANSPORTATION DESIGN MANAGER — DATE
M. ARAKELYAN
PROJECT MANAGER — DATE

S. HAYS — DESIGNED BY — DATE
J. FRYE — DRAWN BY — DATE
G. ROYCROFT — CHECKED BY — DATE

City of Bellevue
TRANSPORTATION DEPARTMENT

HDR

124th Ave NE - NE Spring Blvd to NE Ichigo Way

INTERSECTION GRADING PLAN
NE 16TH ST / 124TH AVE NE

SHEET NAME IG5

SHT 59 OF 198

SECTION 28, T. 25 N., R5E., W.M.
KING COUNTY

95% SUBMITTAL NOT FOR CONSTRUCTION

GENERAL NOTES:

1. UNLESS OTHERWISE NOTED ALL DIMENSIONS ARE IN FEET.
2. THESE TESC DRAWINGS ARE CONCEPTUAL AND REPRESENT A TESC AND TEMPORARY DRAINAGE SYSTEM THAT COULD BE PROVIDED BY THE CONTRACTOR DURING CONSTRUCTION, GENERALLY DEFINED AS THE WORK SPANNING FROM INITIAL SURFACE DISTURBANCE THROUGH COMPLETION OF THE PROJECT.
3. THE CONTRACTOR IS RESPONSIBLE FOR DEVELOPING AND IMPLEMENTING A CONTRACTOR–PREPARED TESC PLAN AND CONSTRUCTION STORMWATER POLLUTION PREVENTION PLAN (CSWPPP) WHICH INCLUDES AN EROSION AND SEDIMENT CONTROL PLAN (CESCP) IN ACCORDANCE WITH CITY OF BELLEVUE CLEARING AND GRADING DEVELOPMENT STANDARDS AND APPENDICES. THIS PLAN MUST BE REVIEWED AND APPROVED BY CITY OF BELLEVUE AND IS TO BE COMPLETE AND IMPLEMENTED PRIOR TO ANY GROUND DISTURBING ACTIVITIES.
4. STORM DRAIN INLET PROTECTION SHOWN FOR BOTH EXISTING AND PROPOSED CATCH BASINS. PROTECTION IS REQUIRED AT ALL TIMES FOR FUNCTIONING CATCH BASINS.
5. CONSTRUCTION STAGING AREAS SHALL BE IDENTIFIED BY THE CONTRACTOR ON UPDATED TESC PLANS. CONTRACTOR SHALL STABILIZE ALL CONSTRUCTION STAGING AREAS BY IDENTIFYING AND INSTALLING BMP'S SUCH AS STABILIZED CONSTRUCTION ENTRANCE, STRAW WATTLE, SILT FENCE, AND HIGH VISIBILITY FENCE.
6. CONTRACTOR TO PROVIDE A WATER QUALITY SAMPLING AND MONITORING PLAN TO CITY OF BELLEVUE FOR REVIEW AND APPROVAL. WATER QUALITY MONITORING LOCATIONS IDENTIFIED ON THE TESC PLANS SHALL NOT BE CONSIDERED A FINAL LIST OF MONITORING LOCATIONS THE CONTRACTOR SHALL IDENTIFY ADDITIONAL MONITORING LOCATIONS OR ELIMINATE MONITORING LOCATIONS BASED ON THE MOST CURRENT CONSTRUCTION WORK PLAN AND UPDATE THE TESC PLANS.
7. BAKER TANKS SHOWN ON PLAN CAN VARY IN NUMBER BASED ON THE CONSTRUCTION ACTIVITY OCCURRING DURING THAT TIME PERIOD.
8. DETENTION VAULT MAY BE USED AS TEMPORARY SEDIMENT VAULT AFTER IT IS INSTALLED. INSTALL TEMPORARY DEWATERING ORIFICE OR BLOCK PRIMARY ORIFICE FROM VAULT OUTLET. CLEAN VAULT AND ALL INLET AND OUTLET PIPES AFTER SITE IS STABILIZED.
9. RUNOFF SHALL NOT BE ALLOWED TO ENTER THE BIORETENTION CELL UNTIL THE FACILITY HAS BEEN TEMPORARILY ESTABLISHED AS DEFINED BELOW AND HAS BEEN ACCEPTED BY THE ENGINEER. TEMPORARY FLOW DIVERSION MEASURES SHALL BE USED AS APPROVED BY THE ENGINEER AND SHALL BE PLACED TO AVOID DAMAGE BY VEHICULAR TRAFFIC. CURB CUTS SHALL BE SEALED WITH AN ASPHALT PLUG OR OTHER MATERIAL AS APPROVED BE THE ENGINEER. TEMPORARY FACILITY ESTABLISHMENT SHALL BE DEFINED AS:
   - FOR PLANTING INSTALLED BETWEEN 1 OCTOBER AND 31 OCTOBER THE CELL SHALL REMAIN OFF LINE FOR 3 MONTHS AFTER INITIAL ACCEPTANCE OF PLANTING.
   - FOR PLANTING INSTALLED BETWEEN 1 NOVEMBER AND 28 FEBRUARY THE CELLS SHALL REMAIN OFF LINE UNTIL THE END OF APRIL.
   - FOR PLANTING INSTALLED BETWEEN 1 MARCH AND 30 APRIL THE CELL SHALL REMAIN OFF LINE FOR 45 DAYS AFTER INITIAL ACCEPTANCE OF PLANTING.
10. CONSTRUCTION ENTRANCE PER C.O.B. BMP C105 SHALL ESTABLISH INGRESS AND EGRESS TO THE CONSTRUCTION SITE. THE CONTRACTOR SHALL DETERMINE THE SIZE AND LOCATION OF CONSTRUCTION ENTRANCES IN ACCORDANCE WITH THE C.O.B. BMP SPECIFICATION, BASED ON REVIEW OF THE PHASING PLANS, AND COORDINATION WITH THE CITY.

LEGEND

- SLOPE PROTECTION: FILTER BLANKET OR BALLASTED VISQUEEN SHEETING
- STABILIZED CONSTRUCTION ENTRANCE
- PROPOSED CATCH BASIN TYPE 1, OR CATCH BASIN TYPE 1L

STORM DRAIN INLET PROTECTION

- EXISTING CATCH BASIN
- PROPOSED CATCH BASIN
- HVF — HIGH VISIBILITY FENCE
- STRAW WATTLE
- SD — PROPOSED STORM SEWER
- RETAINING WALL
- CUT — CUT LINE
- FILL — FILL LINE

KEYED NOTES:

1. STORM DRAIN INLET PROTECTION, PER C.O.B. BMP C220.
2. STRAW WATTLE, PER C.O.B. BMP C235.
3. FILTER BLANKET, PER C.O.B. BMP C122 OR BALLASTED VISQUEEN SHEETING, PER C.O.B. BMP C123.
4. PROTECT RUNOFF FROM ENTERING CULVERT OPENING UNTIL TRIBUTARY DRAINAGE AREA IS STABILIZED.
7. HIGH VISIBILITY PLASTIC FENCE, PER C.O.B. BMP C103.
10. STABILIZED CONSTRUCTION ENTRANCE, PER C.O.B. BMP C105. SEE NOTE 10.

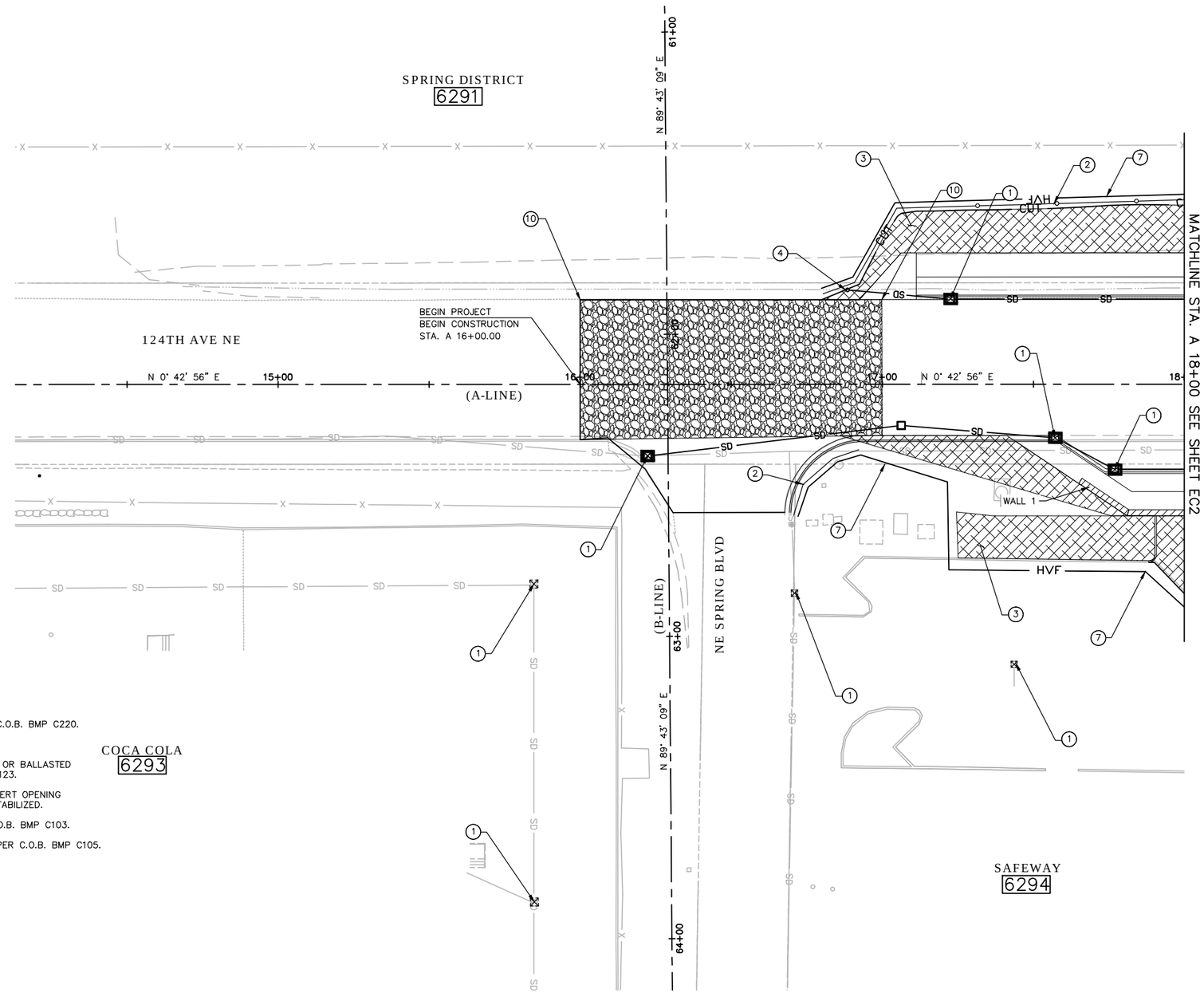

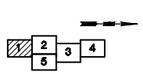

KEY PLAN

NO.	DATE	BY	APPR.	REVISIONS

Approved By

TRANSPORTATION DESIGN MANAGER — DATE
M. ARAKELYAN
PROJECT MANAGER — DATE

J. BROWN — DESIGNED BY — DATE
J. FRYE — DRAWN BY — DATE
J. VANIER — CHECKED BY — DATE

City of Bellevue
TRANSPORTATION DEPARTMENT

HDR

124th Ave NE - NE Spring Blvd to NE Ichigo Way

TESC PLAN
BEGIN TO STA. A 18+00

SHEET NAME **EC1**

SHT 60 OF 198

SECTION 28, T. 25 N., R5E., W.M.
KING COUNTY

95% SUBMITTAL NOT FOR CONSTRUCTION

GENERAL NOTES:

1. UNLESS OTHERWISE NOTED ALL DIMENSIONS ARE IN FEET.
2. THESE TESC DRAWINGS ARE CONCEPTUAL AND REPRESENT A TESC AND TEMPORARY DRAINAGE SYSTEM THAT COULD BE PROVIDED BY THE CONTRACTOR DURING CONSTRUCTION, GENERALLY DEFINED AS THE WORK SPANNING FROM INITIAL SURFACE DISTURBANCE THROUGH COMPLETION OF THE PROJECT.
3. THE CONTRACTOR IS RESPONSIBLE FOR DEVELOPING AND IMPLEMENTING A CONTRACTOR–PREPARED TESC PLAN AND CONSTRUCTION STORMWATER POLLUTION PREVENTION PLAN (CSWPPP) WHICH INCLUDES AN EROSION AND SEDIMENT CONTROL PLAN (CESCP) IN ACCORDANCE WITH CITY OF BELLEVUE CLEARING AND GRADING DEVELOPMENT STANDARDS AND APPENDICES. THIS PLAN MUST BE REVIEWED AND APPROVED BY CITY OF BELLEVUE AND IS TO BE COMPLETE AND IMPLEMENTED PRIOR TO ANY GROUND DISTURBING ACTIVITIES.
4. STORM DRAIN INLET PROTECTION SHOWN FOR BOTH EXISTING AND PROPOSED CATCH BASINS. PROTECTION IS REQUIRED AT ALL TIMES FOR FUNCTIONING CATCH BASINS.
5. CONSTRUCTION STAGING AREAS SHALL BE IDENTIFIED BY THE CONTRACTOR ON UPDATED TESC PLANS. CONTRACTOR SHALL STABILIZE ALL CONSTRUCTION STAGING AREAS BY IDENTIFYING AND INSTALLING BMP'S SUCH AS STABILIZED CONSTRUCTION ENTRANCE, STRAW WATTLE, SILT FENCE, AND HIGH VISIBILITY FENCE.
6. CONTRACTOR TO PROVIDE A WATER QUALITY SAMPLING AND MONITORING PLAN TO CITY OF BELLEVUE FOR REVIEW AND APPROVAL. WATER QUALITY MONITORING LOCATIONS IDENTIFIED ON THE TESC PLANS SHALL NOT BE CONSIDERED A FINAL LIST OF MONITORING LOCATIONS THE CONTRACTOR SHALL IDENTIFY ADDITIONAL MONITORING LOCATIONS OR ELIMINATE MONITORING LOCATIONS BASED ON THE MOST CURRENT CONSTRUCTION WORK PLAN AND UPDATE THE TESC PLANS.
7. BAKER TANKS SHOWN ON PLAN CAN VARY IN NUMBER BASED ON THE CONSTRUCTION ACTIVITY OCCURRING DURING THAT TIME PERIOD.
8. DETENTION VAULT MAY BE USED AS TEMPORARY SEDIMENT VAULT AFTER IT IS INSTALLED. INSTALL TEMPORARY DEWATERING ORIFICE OR BLOCK PRIMARY ORIFICE FROM VAULT OUTLET. CLEAN VAULT AND ALL INLET AND OUTLET PIPES AFTER SITE IS STABILIZED.
9. RUNOFF SHALL NOT BE ALLOWED TO ENTER THE BIORETENTION CELL UNTIL THE FACILITY HAS BEEN TEMPORARILY ESTABLISHED AS DEFINED BELOW AND HAS BEEN ACCEPTED BY THE ENGINEER. TEMPORARY FLOW DIVERSION MEASURES SHALL BE USED AS APPROVED BY THE ENGINEER AND SHALL BE PLACED TO AVOID DAMAGE BY VEHICULAR TRAFFIC. CURB CUTS SHALL BE SEALED WITH AN ASPHALT PLUG OR OTHER MATERIAL AS APPROVED BE THE ENGINEER. TEMPORARY FACILITY ESTABLISHMENT SHALL BE DEFINED AS:
   - FOR PLANTING INSTALLED BETWEEN 1 OCTOBER AND 31 OCTOBER THE CELL SHALL REMAIN OFF LINE FOR 3 MONTHS AFTER INITIAL ACCEPTANCE OF PLANTING.
   - FOR PLANTING INSTALLED BETWEEN 1 NOVEMBER AND 28 FEBRUARY THE CELLS SHALL REMAIN OFF LINE UNTIL THE END OF APRIL.
   - FOR PLANTING INSTALLED BETWEEN 1 MARCH AND 30 APRIL THE CELL SHALL REMAIN OFF LINE FOR 45 DAYS AFTER INITIAL ACCEPTANCE OF PLANTING.
10. CONSTRUCTION ENTRANCE PER C.O.B. BMP C105 SHALL ESTABLISH INGRESS AND EGRESS TO THE CONSTRUCTION SITE. THE CONTRACTOR SHALL DETERMINE THE SIZE AND LOCATION OF CONSTRUCTION ENTRANCES IN ACCORDANCE WITH THE C.O.B. BMP SPECIFICATION, BASED ON REVIEW OF THE PHASING PLANS, AND COORDINATION WITH THE CITY.

LEGEND

- SLOPE PROTECTION: FILTER BLANKET OR BALLASTED VISQUEEN SHEETING
- PROPOSED BIORETENTION OR BIOFILTRATION SWALE
- PROPOSED CATCH BASIN TYPE 1, OR CATCH BASIN TYPE 1L
- PROPOSED CATCH BASIN TYPE 2

STORM DRAIN INLET PROTECTION

- EXISTING CATCH BASIN
- PROPOSED CATCH BASIN
- HVF – HIGH VISIBILITY FENCE
- STRAW WATTLE
- TEMPORARY CURB
- SD – PROPOSED STORM SEWER
- RETAINING WALL
- CUT – CUT LINE
- FILL – FILL LINE

KEYED NOTES:

1. STORM DRAIN INLET PROTECTION, PER C.O.B. BMP C220.
2. STRAW WATTLE, PER C.O.B. BMP C235.
3. FILTER BLANKET, PER C.O.B. BMP C122 OR BALLASTED VISQUEEN SHEETING, PER C.O.B. BMP C123.
5. PROTECT FUTURE BIORETENTION SWALES AND COMPOST–AMENDED BIOFILTRATION SWALE, NO CONSTRUCTION WATER SHALL ENTER LANDSCAPED AREA ONCE FACILITIES ARE CONSTRUCTED UNTIL TEMPORARY ESTABLISHMENT, SEE NOTE 10 ABOVE.
7. HIGH VISIBILITY PLASTIC FENCE, PER C.O.B. BMP C103.
11. TEMPORARY CURB, PER DETAIL 1 ON SHEET ECD1.

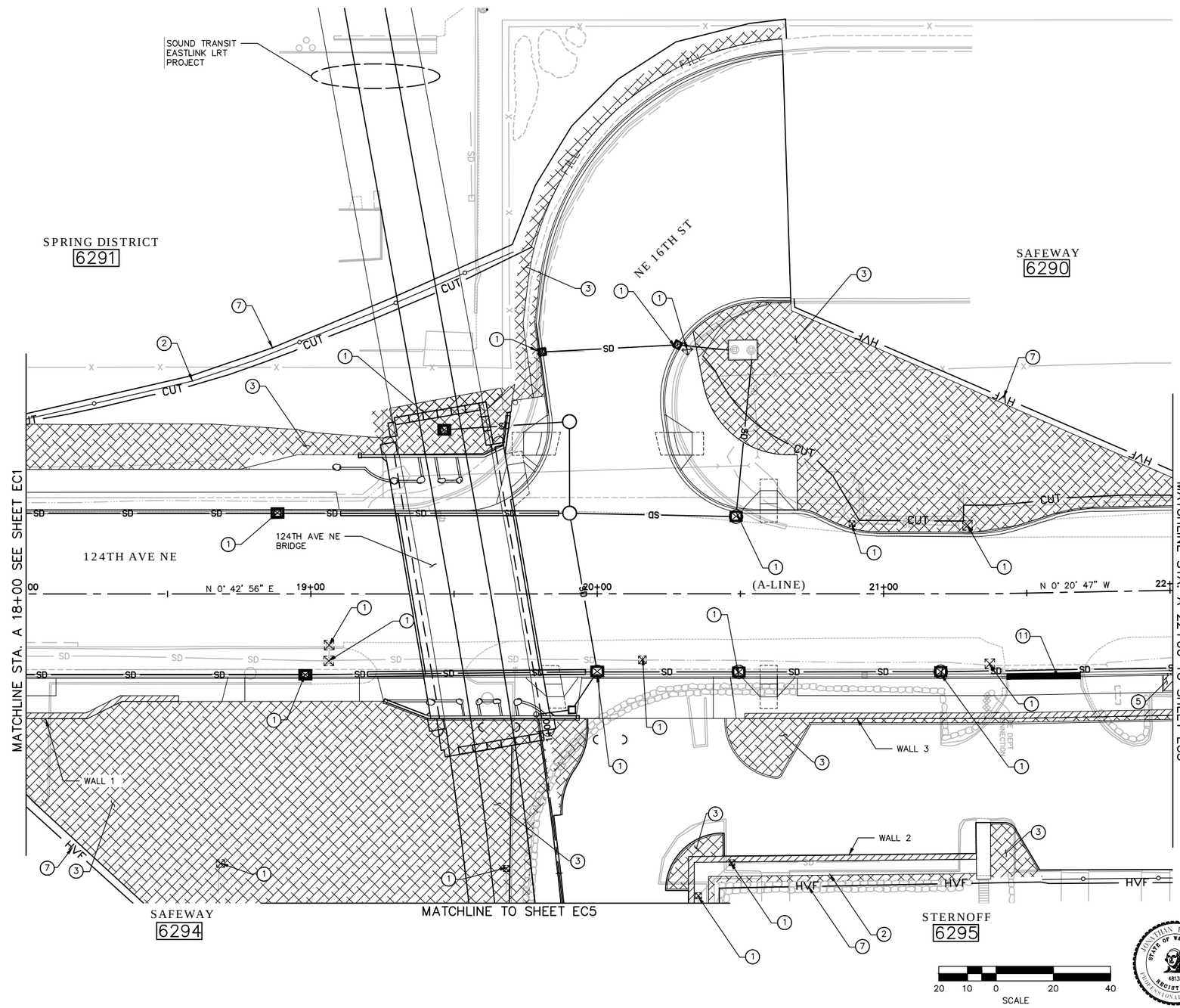

KEY PLAN

NO.	DATE	BY	APPR.	REVISIONS

Approved By

TRANSPORTATION DESIGN MANAGER — DATE
M. ARAKELYAN
PROJECT MANAGER — DATE

J. BROWN — DESIGNED BY — DATE
J. FRYE — DRAWN BY — DATE
J. VANIER — CHECKED BY — DATE

City of Bellevue
TRANSPORTATION DEPARTMENT

124th Ave NE - NE Spring Blvd to NE Ichigo Way

TESC PLAN
STA. A 18+00 TO STA. A 22+00

SHEET NAME EC2

SHT 61 OF 198

SECTION 28, T. 25 N., R5E., W.M.
KING COUNTY

95% SUBMITTAL NOT FOR CONSTRUCTION

GENERAL NOTES:

1. UNLESS OTHERWISE NOTED ALL DIMENSIONS ARE IN FEET.
2. THESE TESC DRAWINGS ARE CONCEPTUAL AND REPRESENT A TESC AND TEMPORARY DRAINAGE SYSTEM THAT COULD BE PROVIDED BY THE CONTRACTOR DURING CONSTRUCTION, GENERALLY DEFINED AS THE WORK SPANNING FROM INITIAL SURFACE DISTURBANCE THROUGH COMPLETION OF THE PROJECT.
3. THE CONTRACTOR IS RESPONSIBLE FOR DEVELOPING AND IMPLEMENTING A CONTRACTOR–PREPARED TESC PLAN AND CONSTRUCTION STORMWATER POLLUTION PREVENTION PLAN (CSWPPP) WHICH INCLUDES AN EROSION AND SEDIMENT CONTROL PLAN (CESCP) IN ACCORDANCE WITH CITY OF BELLEVUE CLEARING AND GRADING DEVELOPMENT STANDARDS AND APPENDICES. THIS PLAN MUST BE REVIEWED AND APPROVED BY CITY OF BELLEVUE AND IS TO BE COMPLETE AND IMPLEMENTED PRIOR TO ANY GROUND DISTURBING ACTIVITIES.
4. STORM DRAIN INLET PROTECTION SHOWN FOR BOTH EXISTING AND PROPOSED CATCH BASINS. PROTECTION IS REQUIRED AT ALL TIMES FOR FUNCTIONING CATCH BASINS.
5. CONSTRUCTION STAGING AREAS SHALL BE IDENTIFIED BY THE CONTRACTOR ON UPDATED TESC PLANS. CONTRACTOR SHALL STABILIZE ALL CONSTRUCTION STAGING AREAS BY IDENTIFYING AND INSTALLING BMP'S SUCH AS STABILIZED CONSTRUCTION ENTRANCE, STRAW WATTLE, SILT FENCE, AND HIGH VISIBILITY FENCE.
6. CONTRACTOR TO PROVIDE A WATER QUALITY SAMPLING AND MONITORING PLAN TO CITY OF BELLEVUE FOR REVIEW AND APPROVAL. WATER QUALITY MONITORING LOCATIONS IDENTIFIED ON THE TESC PLANS SHALL NOT BE CONSIDERED A FINAL LIST OF MONITORING LOCATIONS THE CONTRACTOR SHALL IDENTIFY ADDITIONAL MONITORING LOCATIONS OR ELIMINATE MONITORING LOCATIONS BASED ON THE MOST CURRENT CONSTRUCTION WORK PLAN AND UPDATE THE TESC PLANS.
7. BAKER TANKS SHOWN ON PLAN CAN VARY IN NUMBER BASED ON THE CONSTRUCTION ACTIVITY OCCURRING DURING THAT TIME PERIOD.
8. DETENTION VAULT MAY BE USED AS TEMPORARY SEDIMENT VAULT AFTER IT IS INSTALLED. INSTALL TEMPORARY DEWATERING ORIFICE OR BLOCK PRIMARY ORIFICE FROM VAULT OUTLET. CLEAN VAULT AND ALL INLET AND OUTLET PIPES AFTER SITE IS STABILIZED.
9. RUNOFF SHALL NOT BE ALLOWED TO ENTER THE BIORETENTION CELL UNTIL THE FACILITY HAS BEEN TEMPORARILY ESTABLISHED AS DEFINED BELOW AND HAS BEEN ACCEPTED BY THE ENGINEER. TEMPORARY FLOW DIVERSION MEASURES SHALL BE USED AS APPROVED BY THE ENGINEER AND SHALL BE PLACED TO AVOID DAMAGE BY VEHICULAR TRAFFIC. CURB CUTS SHALL BE SEALED WITH AN ASPHALT PLUG OR OTHER MATERIAL AS APPROVED BE THE ENGINEER. TEMPORARY FACILITY ESTABLISHMENT SHALL BE DEFINED AS:
   - FOR PLANTING INSTALLED BETWEEN 1 OCTOBER AND 31 OCTOBER THE CELL SHALL REMAIN OFF LINE FOR 3 MONTHS AFTER INITIAL ACCEPTANCE OF PLANTING.
   - FOR PLANTING INSTALLED BETWEEN 1 NOVEMBER AND 28 FEBRUARY THE CELLS SHALL REMAIN OFF LINE UNTIL THE END OF APRIL.
   - FOR PLANTING INSTALLED BETWEEN 1 MARCH AND 30 APRIL THE CELL SHALL REMAIN OFF LINE FOR 45 DAYS AFTER INITIAL ACCEPTANCE OF PLANTING.
10. CONSTRUCTION ENTRANCE PER C.O.B. BMP C105 SHALL ESTABLISH INGRESS AND EGRESS TO THE CONSTRUCTION SITE. THE CONTRACTOR SHALL DETERMINE THE SIZE AND LOCATION OF CONSTRUCTION ENTRANCES IN ACCORDANCE WITH THE C.O.B. BMP SPECIFICATION, BASED ON REVIEW OF THE PHASING PLANS, AND COORDINATION WITH THE CITY.

LEGEND

- SLOPE PROTECTION: FILTER BLANKET OR BALLASTED VISQUEEN SHEETING
- PROPOSED BIORETENTION OR BIOFILTRATION SWALE
- ACCESS RISER
- PROPOSED CATCH BASIN TYPE 2

STORM DRAIN INLET PROTECTION

- EXISTING CATCH BASIN
- PROPOSED CATCH BASIN
- HVF – HIGH VISIBILITY FENCE
- STRAW WATTLE
- TEMPORARY CURB
- SD – PROPOSED STORM SEWER
- RETAINING WALL
- FILL – FILL LINE

KEYED NOTES:

1. STORM DRAIN INLET PROTECTION, PER C.O.B. BMP C220.
2. STRAW WATTLE, PER C.O.B. BMP C235.
3. FILTER BLANKET, PER C.O.B. BMP C122 OR BALLASTED VISQUEEN SHEETING, PER C.O.B. BMP C123.
5. PROTECT FUTURE BIORETENTION SWALES AND COMPOST–AMENDED BIOFILTRATION SWALE, NO CONSTRUCTION WATER SHALL ENTER LANDSCAPED AREA ONCE FACILITIES ARE CONSTRUCTED UNTIL TEMPORARY ESTABLISHMENT, SEE NOTE 10 ABOVE.
6. PROTECT WETLAND AREA FROM SEDIMENT OF INTRUSION BY EQUIPMENT OR WORKERS.
7. HIGH VISIBILITY PLASTIC FENCE, PER C.O.B. BMP C103.
11. TEMPORARY CURB, PER DETAIL 1 ON SHEET ECD1.

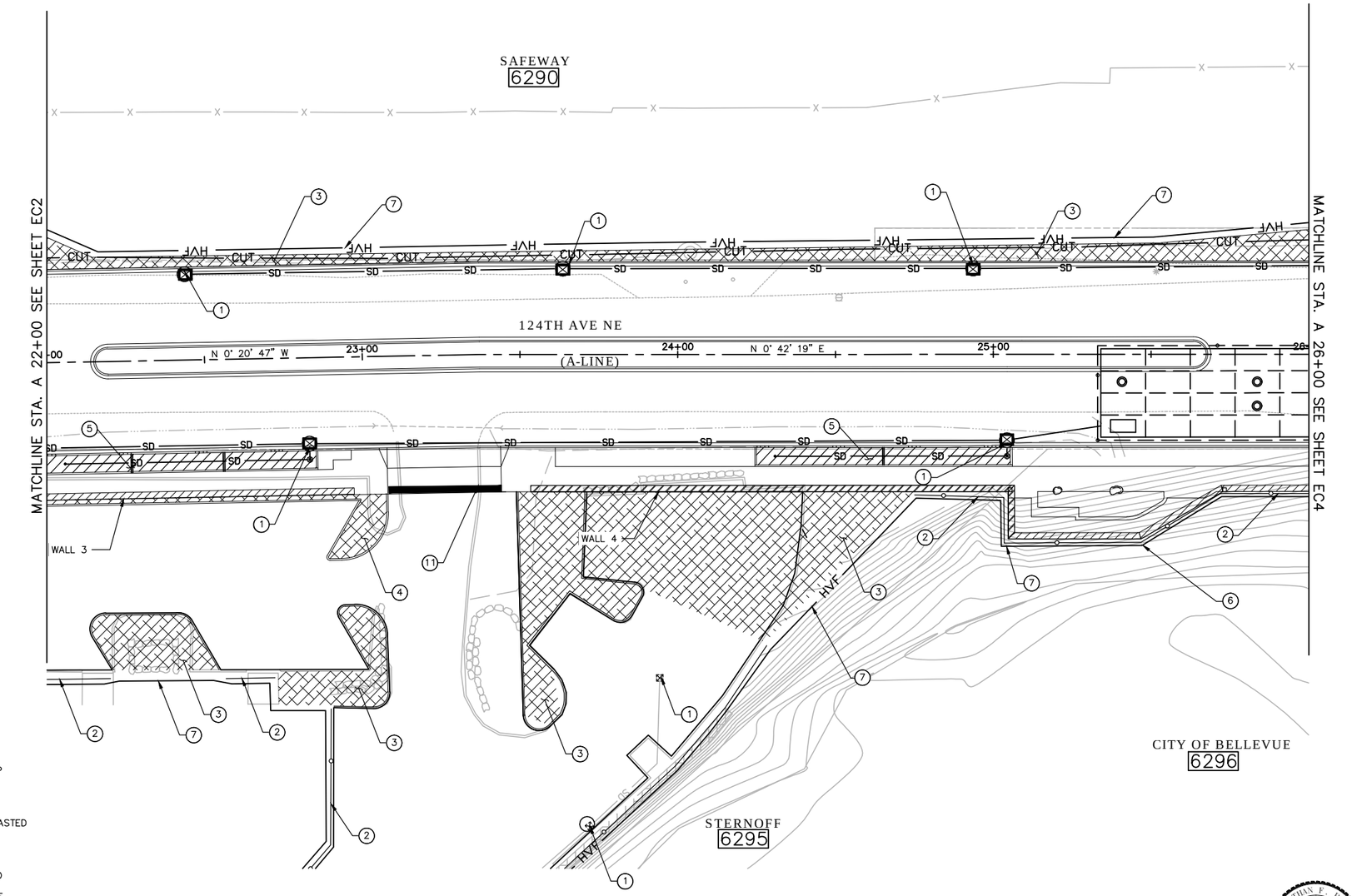

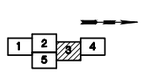

KEY PLAN

20 10 0 20 40
SCALE

NO.	DATE	BY	APPR.	REVISIONS

Approved By

TRANSPORTATION DESIGN MANAGER — DATE
M. ARAKELYAN
PROJECT MANAGER — DATE

J. BROWN — DESIGNED BY — DATE
J. FRYE — DRAWN BY — DATE
J. VANIER — CHECKED BY — DATE

City of Bellevue
TRANSPORTATION DEPARTMENT

HDR

124th Ave NE - NE Spring Blvd to NE Ichigo Way

TESC PLAN
STA. A 22+00 TO 26+00

SHEET NAME **EC3**

SHT 62 OF 198

SECTION 28, T. 25 N., R5E., W.M.
KING COUNTY

95% SUBMITTAL NOT FOR CONSTRUCTION

GENERAL NOTES:

1. UNLESS OTHERWISE NOTED ALL DIMENSIONS ARE IN FEET.
2. THESE TESC DRAWINGS ARE CONCEPTUAL AND REPRESENT A TESC AND TEMPORARY DRAINAGE SYSTEM THAT COULD BE PROVIDED BY THE CONTRACTOR DURING CONSTRUCTION, GENERALLY DEFINED AS THE WORK SPANNING FROM INITIAL SURFACE DISTURBANCE THROUGH COMPLETION OF THE PROJECT.
3. THE CONTRACTOR IS RESPONSIBLE FOR DEVELOPING AND IMPLEMENTING A CONTRACTOR–PREPARED TESC PLAN AND CONSTRUCTION STORMWATER POLLUTION PREVENTION PLAN (CSWPPP) WHICH INCLUDES AN EROSION AND SEDIMENT CONTROL PLAN (CESCP) IN ACCORDANCE WITH CITY OF BELLEVUE CLEARING AND GRADING DEVELOPMENT STANDARDS AND APPENDICES. THIS PLAN MUST BE REVIEWED AND APPROVED BY CITY OF BELLEVUE AND IS TO BE COMPLETE AND IMPLEMENTED PRIOR TO ANY GROUND DISTURBING ACTIVITIES.
4. STORM DRAIN INLET PROTECTION SHOWN FOR BOTH EXISTING AND PROPOSED CATCH BASINS. PROTECTION IS REQUIRED AT ALL TIMES FOR FUNCTIONING CATCH BASINS.
5. CONSTRUCTION STAGING AREAS SHALL BE IDENTIFIED BY THE CONTRACTOR ON UPDATED TESC PLANS. CONTRACTOR SHALL STABILIZE ALL CONSTRUCTION STAGING AREAS BY IDENTIFYING AND INSTALLING BMP'S SUCH AS STABILIZED CONSTRUCTION ENTRANCE, STRAW WATTLE, SILT FENCE, AND HIGH VISIBILITY FENCE.
6. CONTRACTOR TO PROVIDE A WATER QUALITY SAMPLING AND MONITORING PLAN TO CITY OF BELLEVUE FOR REVIEW AND APPROVAL. WATER QUALITY MONITORING LOCATIONS IDENTIFIED ON THE TESC PLANS SHALL NOT BE CONSIDERED A FINAL LIST OF MONITORING LOCATIONS THE CONTRACTOR SHALL IDENTIFY ADDITIONAL MONITORING LOCATIONS OR ELIMINATE MONITORING LOCATIONS BASED ON THE MOST CURRENT CONSTRUCTION WORK PLAN AND UPDATE THE TESC PLANS.
7. BAKER TANKS SHOWN ON PLAN CAN VARY IN NUMBER BASED ON THE CONSTRUCTION ACTIVITY OCCURRING DURING THAT TIME PERIOD.
8. DETENTION VAULT MAY BE USED AS TEMPORARY SEDIMENT VAULT AFTER IT IS INSTALLED. INSTALL TEMPORARY DEWATERING ORIFICE OR BLOCK PRIMARY ORIFICE FROM VAULT OUTLET. CLEAN VAULT AND ALL INLET AND OUTLET PIPES AFTER SITE IS STABILIZED.
9. RUNOFF SHALL NOT BE ALLOWED TO ENTER THE BIORETENTION CELL UNTIL THE FACILITY HAS BEEN TEMPORARILY ESTABLISHED AS DEFINED BELOW AND HAS BEEN ACCEPTED BY THE ENGINEER. TEMPORARY FLOW DIVERSION MEASURES SHALL BE USED AS APPROVED BY THE ENGINEER AND SHALL BE PLACED TO AVOID DAMAGE BY VEHICULAR TRAFFIC. CURB CUTS SHALL BE SEALED WITH AN ASPHALT PLUG OR OTHER MATERIAL AS APPROVED BE THE ENGINEER. TEMPORARY FACILITY ESTABLISHMENT SHALL BE DEFINED AS:
   - FOR PLANTING INSTALLED BETWEEN 1 OCTOBER AND 31 OCTOBER THE CELL SHALL REMAIN OFF LINE FOR 3 MONTHS AFTER INITIAL ACCEPTANCE OF PLANTING.
   - FOR PLANTING INSTALLED BETWEEN 1 NOVEMBER AND 28 FEBRUARY THE CELLS SHALL REMAIN OFF LINE UNTIL THE END OF APRIL.
   - FOR PLANTING INSTALLED BETWEEN 1 MARCH AND 30 APRIL THE CELL SHALL REMAIN OFF LINE FOR 45 DAYS AFTER INITIAL ACCEPTANCE OF PLANTING.
10. CONSTRUCTION ENTRANCE PER C.O.B. BMP C105 SHALL ESTABLISH INGRESS AND EGRESS TO THE CONSTRUCTION SITE. THE CONTRACTOR SHALL DETERMINE THE SIZE AND LOCATION OF CONSTRUCTION ENTRANCES IN ACCORDANCE WITH THE C.O.B. BMP SPECIFICATION, BASED ON REVIEW OF THE PHASING PLANS, AND COORDINATION WITH THE CITY.

LEGEND

- SLOPE PROTECTION: FILTER BLANKET PER COB BMP C122 OR BALLASTED VISQUEEN SHEETING
- BAKER TANK SETUP AREA
- STABILIZED CONSTRUCTION ENTRANCE
- PROPOSED ACCESS RISER
- PROPOSED CATCH BASIN TYPE 1, OR CATCH BASIN TYPE 1L
- PROPOSED CATCH BASIN TYPE 2

STORM DRAIN INLET PROTECTION

- EXISTING CATCH BASIN
- PROPOSED CATCH BASIN

- HVF – HIGH VISIBILITY FENCE
- STRAW WATTLE
- TEMPORARY CURB
- SD – PROPOSED STORM SEWER
- RETAINING WALL
- CUT – CUT LINE
- FILL – FILL LINE

KEYED NOTES:

1. STORM DRAIN INLET PROTECTION, PER C.O.B. BMP C220.
2. STRAW WATTLE, PER C.O.B. BMP C235.
3. FILTER BLANKET, PER C.O.B. BMP C122 OR BALLASTED VISQUEEN SHEETING, PER C.O.B. BMP C123.
6. PROTECT WETLAND AREA FROM SEDIMENT OR INTRUSION BY EQUIPMENT OR WORKERS.
7. HIGH VISIBILITY PLASTIC FENCE, PER C.O.B. BMP C103.
8. APPROXIMATE BAKER TANK SET UP AREA. ADJUST NUMBER OF TANKS AS NEEDED TO ACCOUNT FOR DISTURBED AREA AND ADJUST LOCATION AS NEEDED TO ALLOW THROUGH TRAFFIC.
9. USE MODULAR DETENTION VAULT AS TEMPORARY SEDIMENT VAULT WHEN FACILITY IS AVAILABLE.
10. STABILIZED CONSTRUCTION ENTRANCE, PER C.O.B. BMP C105. SEE NOTE 10.
11. TEMPORARY CURB, PER DETAIL 1 ON SHEET ECD1.

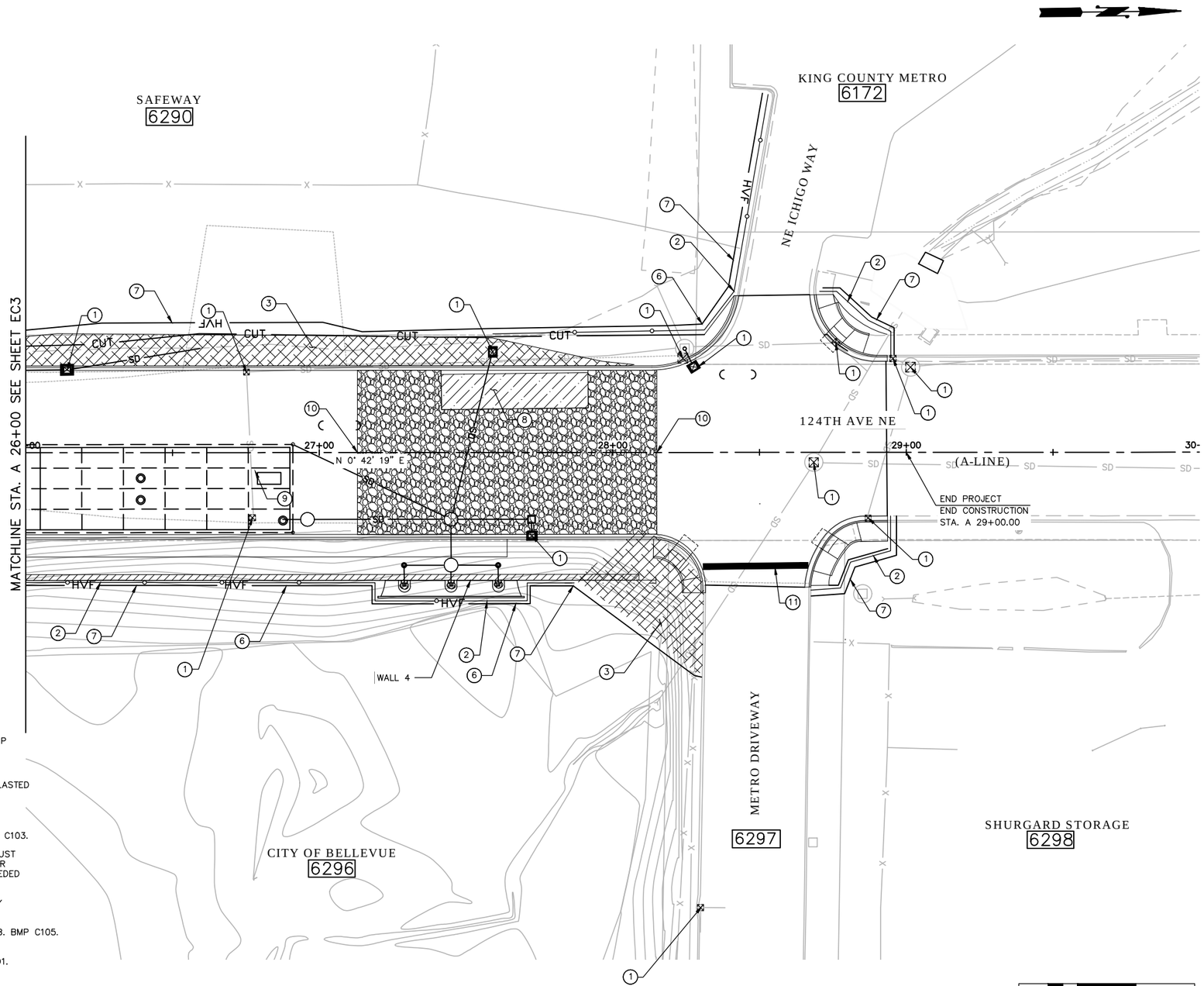

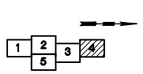

KEY PLAN

20 10 0 20 40
SCALE

NO.	DATE	BY	APPR.	REVISIONS

Approved By

TRANSPORTATION DESIGN MANAGER — DATE
M. ARAKELYAN
PROJECT MANAGER — DATE

J. BROWN — DESIGNED BY — DATE
J. FRYE — DRAWN BY — DATE
J. VANIER — CHECKED BY — DATE

City of Bellevue
TRANSPORTATION DEPARTMENT

HDR

124th Ave NE - NE Spring Blvd to NE Ichigo Way

TESC PLAN
STA. A 26+00 TO END

SHEET NAME EC4

SHT 63 OF 198

SECTION 28, T. 25 N., R5E., W.M.
KING COUNTY

95% SUBMITTAL NOT FOR CONSTRUCTION

GENERAL NOTES:

1. UNLESS OTHERWISE NOTED ALL DIMENSIONS ARE IN FEET.
2. THESE TESC DRAWINGS ARE CONCEPTUAL AND REPRESENT A TESC AND TEMPORARY DRAINAGE SYSTEM THAT COULD BE PROVIDED BY THE CONTRACTOR DURING CONSTRUCTION, GENERALLY DEFINED AS THE WORK SPANNING FROM INITIAL SURFACE DISTURBANCE THROUGH COMPLETION OF THE PROJECT.
3. THE CONTRACTOR IS RESPONSIBLE FOR DEVELOPING AND IMPLEMENTING A CONTRACTOR–PREPARED TESC PLAN AND CONSTRUCTION STORMWATER POLLUTION PREVENTION PLAN (CSWPPP) WHICH INCLUDES AN EROSION AND SEDIMENT CONTROL PLAN (CESCP) IN ACCORDANCE WITH CITY OF BELLEVUE CLEARING AND GRADING DEVELOPMENT STANDARDS AND APPENDICES. THIS PLAN MUST BE REVIEWED AND APPROVED BY CITY OF BELLEVUE AND IS TO BE COMPLETE AND IMPLEMENTED PRIOR TO ANY GROUND DISTURBING ACTIVITIES.
4. STORM DRAIN INLET PROTECTION SHOWN FOR BOTH EXISTING AND PROPOSED CATCH BASINS. PROTECTION IS REQUIRED AT ALL TIMES FOR FUNCTIONING CATCH BASINS.
5. CONSTRUCTION STAGING AREAS SHALL BE IDENTIFIED BY THE CONTRACTOR ON UPDATED TESC PLANS. CONTRACTOR SHALL STABILIZE ALL CONSTRUCTION STAGING AREAS BY IDENTIFYING AND INSTALLING BMP'S SUCH AS STABILIZED CONSTRUCTION ENTRANCE, STRAW WATTLE, SILT FENCE, AND HIGH VISIBILITY FENCE.
6. CONTRACTOR TO PROVIDE A WATER QUALITY SAMPLING AND MONITORING PLAN TO CITY OF BELLEVUE FOR REVIEW AND APPROVAL. WATER QUALITY MONITORING LOCATIONS IDENTIFIED ON THE TESC PLANS SHALL NOT BE CONSIDERED A FINAL LIST OF MONITORING LOCATIONS THE CONTRACTOR SHALL IDENTIFY ADDITIONAL MONITORING LOCATIONS OR ELIMINATE MONITORING LOCATIONS BASED ON THE MOST CURRENT CONSTRUCTION WORK PLAN AND UPDATE THE TESC PLANS.
7. BAKER TANKS SHOWN ON PLAN CAN VARY IN NUMBER BASED ON THE CONSTRUCTION ACTIVITY OCCURRING DURING THAT TIME PERIOD.
8. DETENTION VAULT MAY BE USED AS TEMPORARY SEDIMENT VAULT AFTER IT IS INSTALLED. INSTALL TEMPORARY DEWATERING ORIFICE OR BLOCK PRIMARY ORIFICE FROM VAULT OUTLET. CLEAN VAULT AND ALL INLET AND OUTLET PIPES AFTER SITE IS STABILIZED.
9. RUNOFF SHALL NOT BE ALLOWED TO ENTER THE BIORETENTION CELL UNTIL THE FACILITY HAS BEEN TEMPORARILY ESTABLISHED AS DEFINED BELOW AND HAS BEEN ACCEPTED BY THE ENGINEER. TEMPORARY FLOW DIVERSION MEASURES SHALL BE USED AS APPROVED BY THE ENGINEER AND SHALL BE PLACED TO AVOID DAMAGE BY VEHICULAR TRAFFIC. CURB CUTS SHALL BE SEALED WITH AN ASPHALT PLUG OR OTHER MATERIAL AS APPROVED BE THE ENGINEER. TEMPORARY FACILITY ESTABLISHMENT SHALL BE DEFINED AS:
   - FOR PLANTING INSTALLED BETWEEN 1 OCTOBER AND 31 OCTOBER THE CELL SHALL REMAIN OFF LINE FOR 3 MONTHS AFTER INITIAL ACCEPTANCE OF PLANTING.
   - FOR PLANTING INSTALLED BETWEEN 1 NOVEMBER AND 28 FEBRUARY THE CELLS SHALL REMAIN OFF LINE UNTIL THE END OF APRIL.
   - FOR PLANTING INSTALLED BETWEEN 1 MARCH AND 30 APRIL THE CELL SHALL REMAIN OFF LINE FOR 45 DAYS AFTER INITIAL ACCEPTANCE OF PLANTING.
10. CONSTRUCTION ENTRANCE PER C.O.B. BMP C105 SHALL ESTABLISH INGRESS AND EGRESS TO THE CONSTRUCTION SITE. THE CONTRACTOR SHALL DETERMINE THE SIZE AND LOCATION OF CONSTRUCTION ENTRANCES IN ACCORDANCE WITH THE C.O.B. BMP SPECIFICATION, BASED ON REVIEW OF THE PHASING PLANS, AND COORDINATION WITH THE CITY.

LEGEND

- SLOPE PROTECTION: FILTER BLANKET PER COB BMP C122 OR BALLASTED VISQUEEN SHEETING
- BAKER TANK SETUP AREA
- PROPOSED CATCH BASIN TYPE 1, OR CATCH BASIN TYPE 1L

STORM DRAIN INLET PROTECTION

- EXISTING CATCH BASIN
- PROPOSED CATCH BASIN
- HVF — HIGH VISIBILITY FENCE
- TEMPORARY CURB
- RETAINING WALL
- FILL — FILL LINE

KEYED NOTES:

1. STORM DRAIN INLET PROTECTION, PER C.O.B. BMP C220.
4. FILTER BLANKET, PER C.O.B. BMP C122 OR BALLASTED VISQUEEN SHEETING, PER C.O.B. BMP C123.
7. HIGH VISIBILITY PLASTIC FENCE, PER C.O.B. BMP C103.
8. APPROXIMATE BAKER TANK SET UP AREA. ADJUST NUMBER OF TANKS AS NEEDED TO ACCOUNT FOR DISTURBED AREA AND ADJUST LOCATION AS NEEDED TO ALLOW THROUGH TRAFFIC.

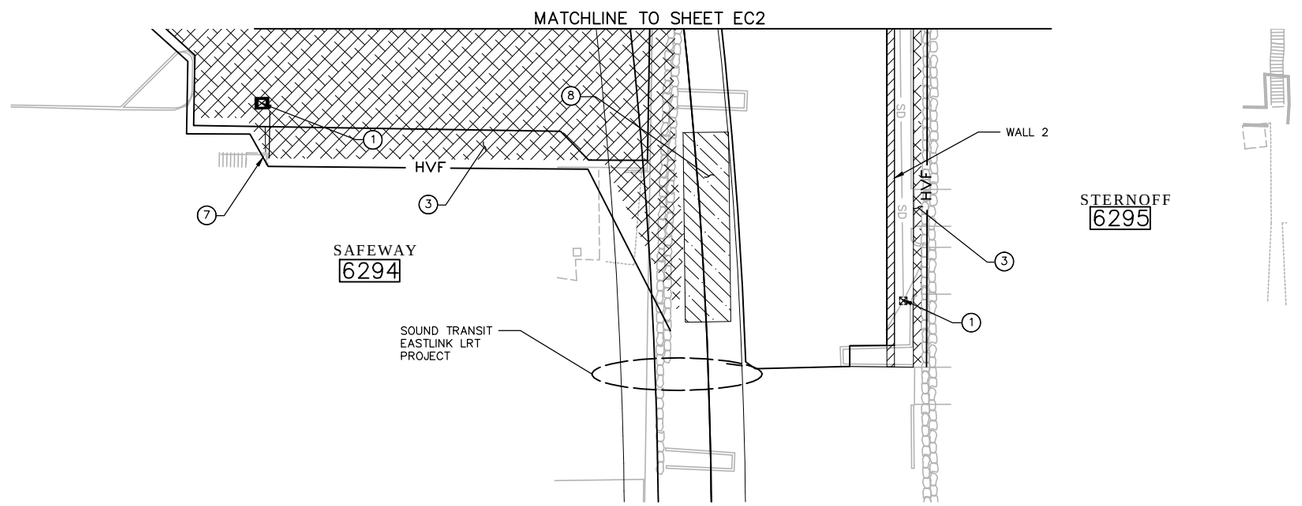

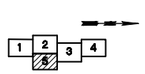

KEY PLAN

20 10 0 20 40
SCALE

NO.	DATE	BY	APPR.	REVISIONS

Approved By

TRANSPORTATION DESIGN MANAGER — DATE
M. ARAKELYAN
PROJECT MANAGER — DATE

J. BROWN — DESIGNED BY — DATE
J. FRYE — DRAWN BY — DATE
J. VANIER — CHECKED BY — DATE

City of Bellevue
TRANSPORTATION DEPARTMENT

HDR

124th Ave NE - NE Spring Blvd to NE Ichigo Way

TESC PLAN

SHEET NAME EC5

SHT 64 OF 198

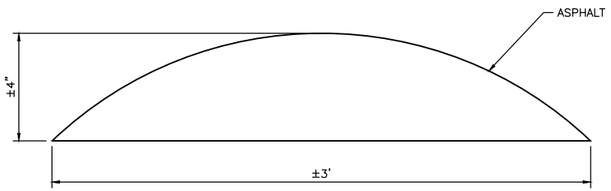

TEMPORARY CURB DETAIL (1 / –)
NOT TO SCALE

NOTES:

1. TEMPORARY CURB SHALL BE ROUNDED FOR FEASIBLE VEHICLULAR TRAFFIC OVER CURB.

NO.	DATE	BY	APPR.	REVISIONS

Approved By

TRANSPORTATION DESIGN MANAGER — DATE
M. ARAKELYAN
PROJECT MANAGER — DATE

J. BROWN — DESIGNED BY — DATE
C. WILCOX — DRAWN BY — DATE
R. NORBERG — CHECKED BY — DATE

City of Bellevue
TRANSPORTATION DEPARTMENT

124th Ave NE - NE Spring Blvd to NE Ichigo Way

TESC DETAILS

SHEET NAME ECD1

SHT 65 OF 198

SECTION 28, T. 25 N., R5E., W.M.
KING COUNTY

95% SUBMITTAL NOT FOR CONSTRUCTION

GENERAL NOTES:

1. UNLESS OTHERWISE NOTED, ALL DIMENSIONS ARE IN FEET.
2. SEE SHEETS DRP1 THROUGH DRP5 FOR DRAINAGE PROFILES.
3. ALL SD PIPE SHALL BE PVC, UNLESS OTHERWISE NOTED ON PLANS AND PROFILES.
4. STATION AND OFFSETS PROVIDED FOR STRUCTURES REFERENCE CENTER OF GRATE LOCATION.
5. CATCH BASIN TYPE 1 SHALL BE PER C.O.B. STD DTL D-2. CATCH BASIN TYPE 1L SHALL BE PER C.O.B. STD DTL D-3. CATCH BASIN TYPE 2 SHALL BE PER C.O.B. STD DTL D-4. STORM DRAIN CLEANOUTS SHALL BE PER C.O.B. STD DTL D-52.

LEGEND

- (X) CONSTRUCTION NOTE
- EXISTING CATCH BASIN
- EXISTING MANHOLE
- CATCH BASIN TYPE 1, OR CATCH BASIN TYPE 1L. SEE STRUCTURE TABLE FOR TYPE.
- CATCH BASIN TYPE 2
- —SD— EXISTING STORM SEWER
- —SD— STORM SEWER

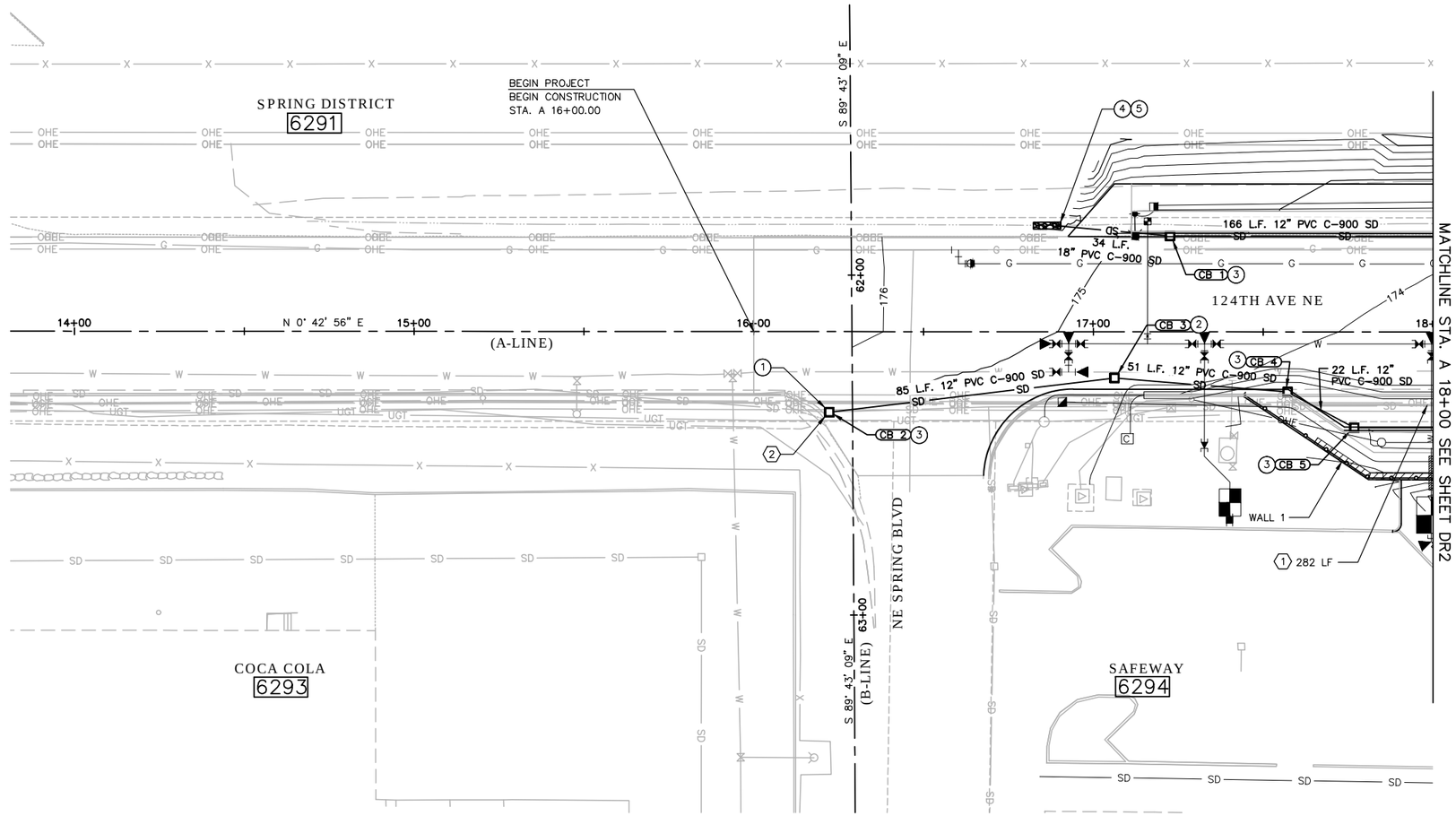

CONSTRUCTION NOTES:

1. CONNECT EXISTING STORM SEWER AND/OR DRAIN TO NEW STRUCTURE
2. SOLID COVER PER C.O.B. STD. DTL. D-8 INSTALL FRAME PER C.O.B. STD. DTL. D-9.
3. VANED GRATE PER C.O.B. STD. DTL. D-6. INSTALL FRAME PER C.O.B. STD. DTL. D-9.
4. 8' LONG BY 7' WIDE BY 1' THICK ROCK OUTFALL PROTECTION PER C.O.B. STD. DTL. D-59.
5. BEVELED CULVERT END PER C.O.B. STD. DTL. D-34 WITH TRASH RACK PER C.O.B. STD. DTL. D-53.

REMOVAL NOTES:

1. REMOVING PIPE
2. REMOVING DRAINAGE STRUCTURE

STORM STRUCTURE TABLE				
NAME	STATION	OFFSET	RIM (FT)	STRUCTURE TYPE
CB 2	A 16+22.25	23.69 RTT	174.75	CATCH BASIN TYPE 1
CB 3	A 17+06.25	13.62 RTT	174.29	CATCH BASIN TYPE 1
CB 1	A 17+22.56	28.20 LTT	174.79	CATCH BASIN TYPE 1
CB 4	A 17+57.19	17.69 RTT	173.77	CATCH BASIN TYPE 1
CB 5	A 17+76.87	28.20 RTT	173.44	CATCH BASIN TYPE 1

2 3 4
KEY PLAN

20 10 0 20 40
SCALE

NO.	DATE	BY	APPR.	REVISIONS

Approved By

TRANSPORTATION DESIGN MANAGER DATE
M. ARAKELYAN
PROJECT MANAGER DATE

J. BROWN
DESIGNED BY DATE
J. FRYE
DRAWN BY DATE
J. VANIER
CHECKED BY DATE

City of Bellevue
TRANSPORTATION DEPARTMENT

124th Ave NE - NE Spring Blvd to NE Ichigo Way

DRAINAGE PLAN
BEGIN TO STA. A 18+00

SHEET NAME DR1

SHT 66 OF 198

SECTION 28, T. 25 N., R5E., W.M.
KING COUNTY

95% SUBMITTAL NOT FOR CONSTRUCTION

GENERAL NOTES:

1. UNLESS OTHERWISE NOTED, ALL DIMENSIONS ARE IN FEET.
2. SEE SHEETS DRP1 THROUGH DRP5 FOR DRAINAGE PROFILES.
3. ALL SD PIPE SHALL BE PVC, UNLESS OTHERWISE NOTED ON PLANS AND PROFILES.
4. STATION AND OFFSETS PROVIDED FOR STRUCTURES REFERENCE CENTER OF GRATE LOCATION.
5. CATCH BASIN TYPE 1 SHALL BE PER C.O.B. STD DTL D-2. CATCH BASIN TYPE 1L SHALL BE PER C.O.B. STD DTL D-3. CATCH BASIN TYPE 2 SHALL BE PER C.O.B. STD DTL D-4. STORM DRAIN CLEANOUTS SHALL BE PER C.O.B. STD DTL D-52.
6. THE JOINT UTILITY TRENCH (JUT) ACROSS 124TH AVE NE AND NORTH ALONG 124TH AVE NE FROM STA 21+80 UP TO 29+15 WILL BE INSTALLED BY THE FRANCHISE UTILITIES IN ADVANCE OF THE PROJECT. THE WORK TO BE PERFORMED FOR THE JUT BY THE CITY CONTRACTOR AS PART OF THE ROAD CONSTRUCTION WILL INCLUDE TRENCHING, GRAVEL BACKFILL, COMPACTION AND PAVING. THE LIMITS OF THIS WORK WILL EXTEND FROM STA 16+80 TO STA 21+80 AS SHOWN ON THESE PLANS.

LEGEND

- (X) CONSTRUCTION NOTE
- EXISTING CATCH BASIN
- EXISTING MANHOLE
- CATCH BASIN TYPE 1, OR CATCH BASIN TYPE 1L. SEE STRUCTURE TABLE FOR TYPE.
- CATCH BASIN TYPE 2
- STORM DRAIN CLEANOUT
- —SD— EXISTING STORM SEWER
- —SD— STORM SEWER

CONSTRUCTION NOTES:

(2) SOLID COVER PER C.O.B. STD. DTL. D-8 INSTALL FRAME PER C.O.B. STD. DTL. D-9.

(3) VANED GRATE PER C.O.B. STD. DTL. D-6. INSTALL FRAME PER C.O.B. STD. DTL. D-9.

(8) CURB CUT, PER C.O.B. STD. DTL. NPD-10.

(9) FOR TEMPORARY DRAINAGE UNDER SOUND TRANSIT BRIDGE, CONTRACTOR TO COORDINATE CONSTRUCTION SEQUENCING AND TIMING WITH SOUND TRANSIT CONSTRUCTION. THIS CONVEYANCE SEGMENT MAY BE OPTIONAL IF SOUND TRANSIT CONSTRUCTION WILL OCCUR WITHIN ACCEPTABLE TIME FRAME AFTER BRIDGE CONSTRUCTION, AS DETERMINED BY CITY OF BELLEVUE.

(10) ADJUST ACCESS RIMS TO FINISHED GRADE.

REMOVAL NOTES:

(1) REMOVING PIPE

(2) REMOVING DRAINAGE STRUCTURE

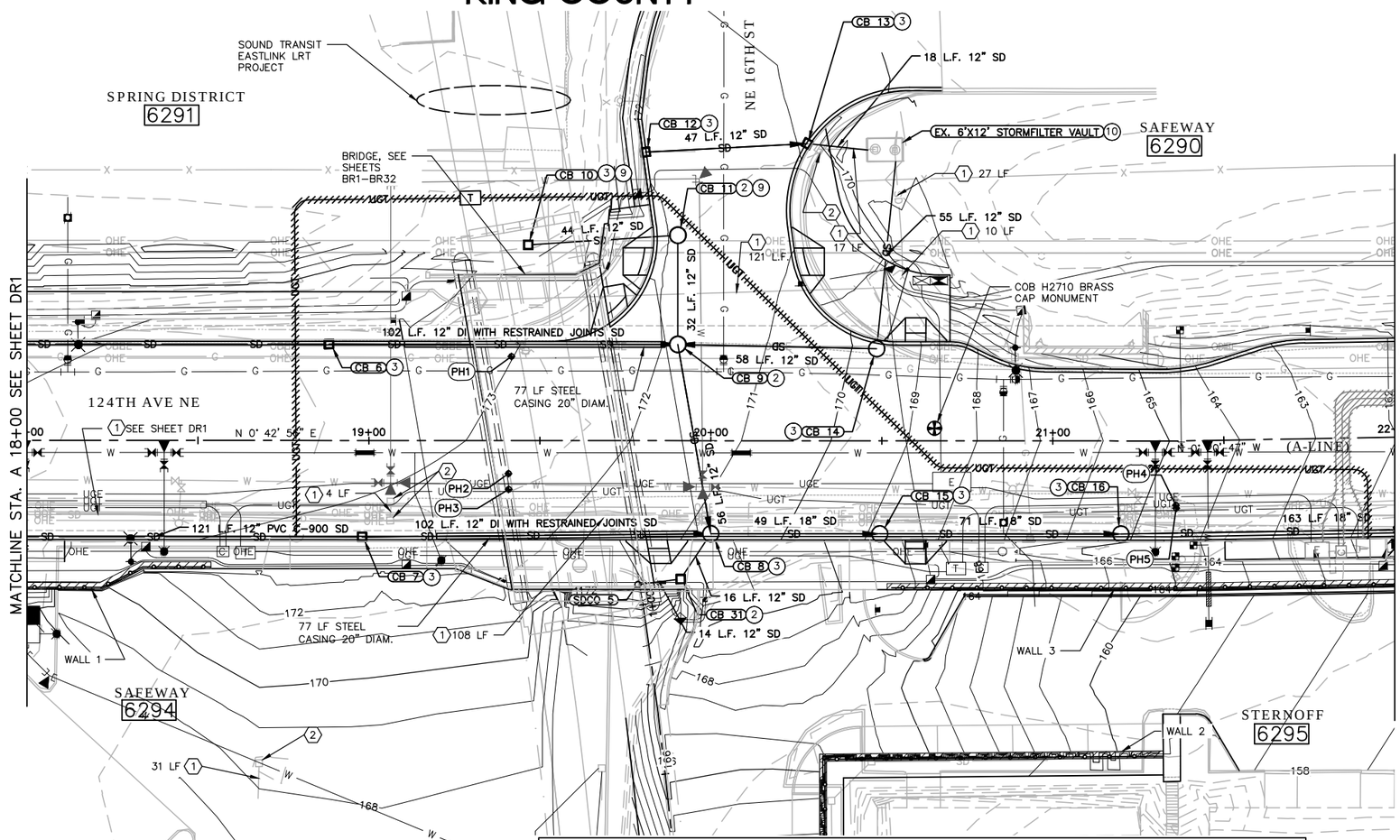

STORM STRUCTURE TABLE

NAME	STATION	OFFSET	RIM (FT)	STRUCTURE TYPE
CB 28	A 18+66.92	127.56 RTT	166.90	CATCH BASIN TYPE 1 – CONNECT TO EXISTING 6" CONCRETE SD PIPE FIELD VERIFY INVERT
CB 6	A 18+88.33	28.20 LTT	173.66	CATCH BASIN TYPE 1
CB 7	A 18+98.01	28.20 RTT	172.77	CATCH BASIN TYPE 1
CB 10	A 19+46.54	57.25 LTT	161.63	CATCH BASIN TYPE 1
SDCO 5	A 19+78.70	42.08 RTT	172.62	STORM DRAIN CLEANOUT (6")
CB 12	A 19+80.84	84.43 LTT	171.93	CATCH BASIN TYPE 1
CB 11	A 19+90.32	60.09 LTT	171.95	CATCH BASIN TYPE 2 (48"). CNTR OF GRATE AT 19+89.93, 61.00 LT.
CB 9	A 19+90.32	28.16 LTT	171.87	CATCH BASIN TYPE 2 (48"). CNTR OF GRATE AT 19+89.67, 28.90 LT.
CB 31	A 19+91.18	40.47 RTT	171.66	CATCH BASIN TYPE 1
CB 8	A 20+00	27.22 RTT	170.76	CATCH BASIN TYPE 2 (48"). CNTR OF GRATE AT 20+00.00, 26.24 RT.
CB 13	A 20+28.12	86.90 LTT	170.90	CATCH BASIN TYPE 1L
CB 14	A 20+48.47	26.93 LTT	169.69	CATCH BASIN TYPE 2 (48"). CNTR OF GRATE AT 20+48.47, 27.91 RT.
CB 15	A 20+49.41	27.22 RTT	168.84	CATCH BASIN TYPE 2 (48"). CNTR OF GRATE AT 20+49.41, 26.24 RT.
EX. 6'X12' STORMFILTER VAULT	A 20+50.86	85.13 LTT	169.38	EXISTING STORMFILTER VAULT ON SAFEWAY PROPERTY
CB 16	A 21+19.91	27.22 RTT	165.18	CATCH BASIN TYPE 2 (48"). CNTR OF GRATE AT 21+19.91, 26.24 RT.

UTILITY POTHOLE INFORMATION:

PH6	8" DIP WATER	GE=154.83,	TOP OF PIPE=149.8
PH7	6" GAS,	GE=148.20,	TOP OF PIPE=144.9
PH8	¾" POLYMER UNKNOWN,	GE=148.75,	TOP OF PIPE=145.6
PH9	12" DI WATER,	GE=148.96,	TOP OF PIPE=143.2
PH10	(1)1"&(2)2" PVC COMM,	GE=148.60,	TOP OF CONDUIT=145.5
PH11	8" DIP WATER	GE=154.3,	TOP OF PIPE=149.6
PH12	8" DIP WATER	GE=163.8,	TOP OF PIPE=156.1
PH13	8" CIP WATER	GE=162.3,	TOP OF PIPE=157.5
PH14	6" DIP WATER	GE=163.4,	TOP OF PIPE=156.2
PH15	8" DIP WATER	GE=175.5,	TOP OF PIPE=171.3

20 10 0 20 40
SCALE

1 | 2 | 3 | 4

KEY PLAN

NO.	DATE	BY	APPR.	REVISIONS

Approved By

TRANSPORTATION DESIGN MANAGER — DATE
M. ARAKELYAN
PROJECT MANAGER — DATE

J. BROWN — DESIGNED BY — DATE
J. FRYE — DRAWN BY — DATE
J. VANIER — CHECKED BY — DATE

City of Bellevue
TRANSPORTATION DEPARTMENT

HDR

124th Ave NE - NE Spring Blvd to NE Ichigo Way

DRAINAGE PLAN
STA. A 18+00 TO STA. A 22+00

SHEET NAME **DR2**

SHT 67 OF 198

SECTION 28, T. 25 N., R5E., W.M.
KING COUNTY

95% SUBMITTAL NOT FOR CONSTRUCTION

GENERAL NOTES:

1. UNLESS OTHERWISE NOTED, ALL DIMENSIONS ARE IN FEET.
2. SEE SHEETS DRP1 THROUGH DRP5 FOR DRAINAGE PROFILES.
3. ALL SD PIPE SHALL BE PVC, UNLESS OTHERWISE NOTED ON PLANS AND PROFILES.
4. STATION AND OFFSETS PROVIDED FOR STRUCTURES REFERENCE CENTER OF GRATE LOCATION.
5. CATCH BASIN TYPE 1 SHALL BE PER C.O.B. STD DTL D-2. CATCH BASIN TYPE 1L SHALL BE PER C.O.B. STD DTL D-3. CATCH BASIN TYPE 2 SHALL BE PER C.O.B. STD DTL D-4. STORM DRAIN CLEANOUTS SHALL BE PER C.O.B. STD DTL D-52.
6. THE JOINT UTILITY TRENCH (JUT) ACROSS 124TH AVE NE AND NORTH ALONG 124TH AVE NE FROM STA 21+80 UP TO 29+15 WILL BE INSTALLED BY THE FRANCHISE UTILITIES IN ADVANCE OF THE PROJECT. THE WORK TO BE PERFORMED FOR THE JUT BY THE CITY CONTRACTOR AS PART OF THE ROAD CONSTRUCTION WILL INCLUDE TRENCHING, GRAVEL BACKFILL, COMPACTION AND PAVING. THE LIMITS OF THIS WORK WILL EXTEND FROM STA 16+80 TO STA 21+80 AS SHOWN ON THESE PLANS.

LEGEND

- (X) CONSTRUCTION NOTE
- EXISTING CATCH BASIN
- EXISTING MANHOLE
- CATCH BASIN TYPE 1, OR CATCH BASIN TYPE 1L. SEE STRUCTURE TABLE FOR TYPE.
- CATCH BASIN TYPE 2
- STORM DRAIN CLEANOUT
- ACCESS RISER, SEE DETAIL SHEET DT6.
- OVERFLOW STRUCTURE
- —SD— EXISTING STORM SEWER
- —SD— STORM SEWER
- BIORETENTION SWALE WITH SSD UNDERDRAIN
- STREAMBED COBBLES, 4 IN. SPLASH PAD
- ACCESS HATCH, SEE DETAIL SHEET DT6.

CONSTRUCTION NOTES:

(3) VANED GRATE PER C.O.B. STD. DTL. D-6. INSTALL FRAME PER C.O.B. STD. DTL. D-9.

(6) BIORETENTION SWALE, SEE DETAIL A ON SHEET DT1.

(7) BIORETENTION CONCRETE WEIR, SEE DETAIL C AND D ON SHEET DT1.

(8) CURB CUT, PER C.O.B. STD. DTL. NDP-10

(11) ADJUST CATCH BASIN RIM PER C.O.B, STD. DTL. D-23

(13) CONNECT TO MODULAR VAULT DETENTION SYSTEM

(14) 6" VAULT PERIMETER DRAIN, SEE DETAIL A ON SHEET DT4 FOR ELEVATION AND MATERIAL.

(15) OVERFLOW STRUCTURE, SEE DETAIL B ON SHEET DT1.

REMOVAL NOTES:

(1) REMOVING PIPE

(2) REMOVING DRAINAGE STRUCTURE

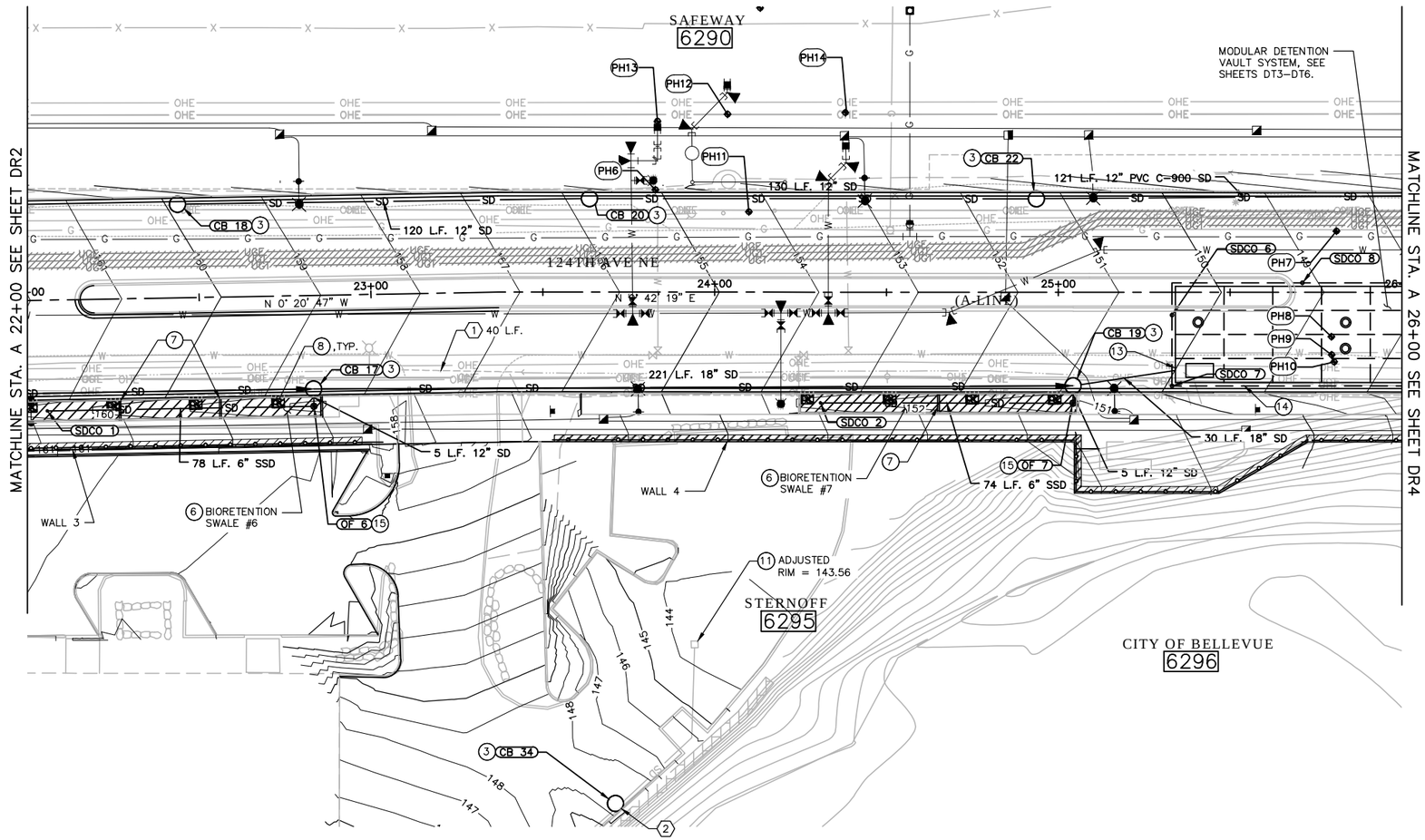

STORM STRUCTURE TABLE				
NAME	STATION	OFFSET	RIM (FT)	STRUCTURE TYPE
SDCO 1	A 22+05.20	32.25 RTT	158.80	STORM DRAIN CLEANOUT (6")
CB 18	A 22+44.17	27.22 LTT	159.88	CATCH BASIN TYPE 2 (48"). CNTR OF GRATE AT 22+44.17, 28.20 LT.
CB 17	A 22+82.82	27.22 RTT	158.54	CATCH BASIN TYPE 2 (48"). CNTR OF GRATE AT 22+82.82, 26.24 RT.
OF 6	A 22+82.82	32.25 RTT	158.93	BIORETENTION OVERFLOW STRUCTURE
CB 20	A 23+63.55	27.22 LTT	155.76	CATCH BASIN TYPE 2 (48"). CNTR OF GRATE AT 23+63.55, 28.20 LT.
CB 34	A 23+71.21	148.78 RTT	148.62	CATCH BASIN TYPE 2 (48"). CONNECT TO EX SD PIPE, IE=134.4 (24" SE) AND IE=139.8 (12" NW)
SDCO 2	A 24+30.76	32.25 RTT	148.86	STORM DRAIN CLEANOUT (6")
CB 22	A 24+93.60	27.22 LTT	151.27	CATCH BASIN TYPE 2 (48"). CNTR OF GRATE AT 24+93.60, 28.20 LT.
CB 19	A 25+04.28	27.22 RTT	150.90	CATCH BASIN TYPE 2 (48"). CNTR OF GRATE AT 25+04.28, 26.24 RT.
OF 7	A 25+04.30	32.24 RTT	150.37	BIORETENTION OVERFLOW STRUCTURE
SDCO 6	A 25+33.03	6.63 RTT	0.00	SDCO (6")
SDCO 7	A 25+33.03	27.24 RTT	149.94	SDCO (6")
SDCO 8	A 25+70.94	2.76 LTT	149.16	SDCO (6")

NATURAL DRAINAGE PRACTICE TABLE					
BIORETENTION SWALES					
NAME	START STATION	END STATION	OFFSET (LT/RT)	OVERFLOW STRUCTURE	ADD. REMARKS
BS #6	21+98.61	22+84.83	RT	OF 6	WEIR STA.: • 22+26.40 • 22+55.61
BS #7	24+24.43	25+05.37	RT	OF 7	WEIR STA.: • 24+64.90

UTILITY POTHOLE INFORMATION:

PH6	8" DIP WATER	GE=154.83,	TOP OF PIPE=149.8
PH7	6" GAS,	GE=148.20,	TOP OF PIPE=144.9
PH8	¾" POLYMER UNKNOWN,	GE=148.75,	TOP OF PIPE=145.6
PH9	12" DI WATER,	GE=148.96,	TOP OF PIPE=143.2
PH10	(1)1"&(2)2" PVC COMM,	GE=148.60,	TOP OF CONDUIT=145.5
PH11	8" DIP WATER	GE=154.3,	TOP OF PIPE=149.6
PH12	8" DIP WATER	GE=163.8,	TOP OF PIPE=156.1
PH13	8" CIP WATER	GE=162.3,	TOP OF PIPE=157.5
PH14	6" DIP WATER	GE=163.4,	TOP OF PIPE=156.2
PH15	8" DIP WATER	GE=175.5,	TOP OF PIPE=171.3

1 2 3 4

KEY PLAN

20 10 0 20 40
SCALE

JONATHAN F. BROWN STATE OF WASHINGTON 48135 REGISTERED PROFESSIONAL ENGINEER

NO.	DATE	BY	APPR.	REVISIONS

Approved By

TRANSPORTATION DESIGN MANAGER — DATE
M. ARAKELYAN
PROJECT MANAGER — DATE

J. BROWN — DESIGNED BY — DATE
J. FRYE — DRAWN BY — DATE
J. VANIER — CHECKED BY — DATE

City of Bellevue
TRANSPORTATION DEPARTMENT

HDR

124th Ave NE - NE Spring Blvd to NE Ichigo Way

DRAINAGE PLAN
STA. A 22+00 TO STA. A 26+00

SHEET NAME **DR3**

SECTION 28, T. 25 N., R5E., W.M.
KING COUNTY

95% SUBMITTAL NOT FOR CONSTRUCTION

GENERAL NOTES:

1. UNLESS OTHERWISE NOTED, ALL DIMENSIONS ARE IN FEET.
2. SEE SHEETS DRP1 THROUGH DRP5 FOR DRAINAGE PROFILES.
3. ALL SD PIPE SHALL BE PVC, UNLESS OTHERWISE NOTED ON PLANS AND PROFILES.
4. STATION AND OFFSETS PROVIDED FOR STRUCTURES REFERENCE CENTER OF GRATE LOCATION.
5. CATCH BASIN TYPE 1 SHALL BE PER C.O.B. STD DTL D-2. CATCH BASIN TYPE 1L SHALL BE PER C.O.B. STD DTL D-3. CATCH BASIN TYPE 2 SHALL BE PER C.O.B. STD DTL D-4. STORM DRAIN CLEANOUTS SHALL BE PER C.O.B. STD DTL D-52.
6. THE JOINT UTILITY TRENCH (JUT) ACROSS 124TH AVE NE AND NORTH ALONG 124TH AVE NE FROM STA 21+80 UP TO 29+15 WILL BE INSTALLED BY THE FRANCHISE UTILITIES IN ADVANCE OF THE PROJECT. THE WORK TO BE PERFORMED FOR THE JUT BY THE CITY CONTRACTOR AS PART OF THE ROAD CONSTRUCTION WILL INCLUDE TRENCHING, GRAVEL BACKFILL, COMPACTION AND PAVING. THE LIMITS OF THIS WORK WILL EXTEND FROM STA 16+80 TO STA 21+80 AS SHOWN ON THESE PLANS.

LEGEND

- (X) CONSTRUCTION NOTE
- EXISTING CATCH BASIN
- EXISTING MANHOLE
- CATCH BASIN TYPE 1, OR CATCH BASIN TYPE 1L. SEE STRUCTURE TABLE FOR TYPE.
- CATCH BASIN TYPE 2
- SCUPPER, SEE DETAIL SHEET DT4.
- ACCESS RISER, SEE DETAIL SHEET DT6.
- STORM DRAIN CLEANOUT
- — SD — EXISTING STORM SEWER
- —SD— STORM SEWER
- ACCESS HATCH, SEE DETAIL SHEET DT6.
- COMPOST-AMENDED BIOFILTRATION SWALE

CONSTRUCTION NOTES:

(2) SOLID COVER PER C.O.B. STD. DTL. D-8 INSTALL FRAME PER C.O.B. STD. DTL. D-9.

(3) VANED GRATE PER C.O.B. STD. DTL. D-6. INSTALL FRAME PER C.O.B. STD. DTL. D-9.

(4) ROCK OUTFALL PROTECTION PER C.O.B. STD. DTL. D-59.

(11) ADJUST CATCH BASIN RIM PER C.O.B. STD. DTL. D-23.

(12) 100 LF MINIMUM COMPOST-AMENDED BIOFILTRATION SWALE, SEE DETAILS C AND D ON SHEET DT2.

(14) 6" VAULT PERIMETER DRAIN, SEE DETAIL A ON SHEET DT4 FOR ELEVATION AND MATERIAL.

(16) CONNECTION TO DRAINAGE STRUCTURE

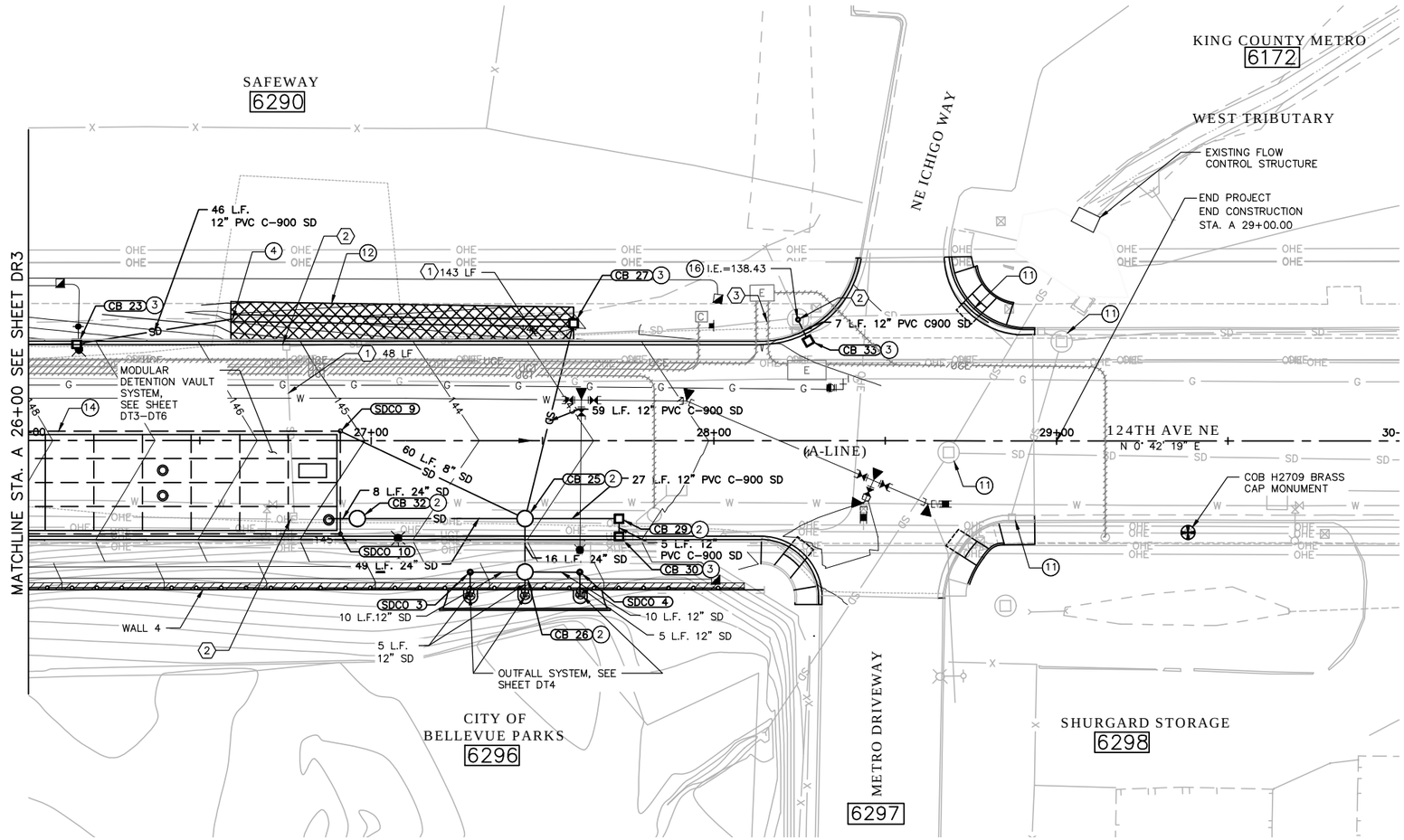

REMOVAL NOTES:

(1) REMOVING PIPE

(2) REMOVING DRAINAGE STRUCTURE

(3) CONTROLLED DENSITY FILL FOR ABANDONED PIPE. LEAVE 4' STUB OF EX. 24" SD PIPE FROM OUTSIDE EDGE OF CATCH BASIN, PLUG WITH CONTROLLED DENSITY BACKFILL FOR ABANDONED PIPE.

STORM STRUCTURE TABLE

NAME	STATION	OFFSET	RIM (FT)	STRUCTURE TYPE
CB 23	A 26+14.09	28.20 LTT	147.20	CATCH BASIN TYPE 1
SDCO 10	A 26+91.03	27.25 RTT	144.67	SDCO (6")
SDCO 9	A 26+91.03	2.75 LTT	141.08	SDCO (6")
CB 32	A 26+95.99	22.75 RTT	144.61	CATCH BASIN TYPE 2 (48") WITH FLOW CONTROL STRUCTURE, SEE DETAIL A, SHEET DT3. CNTR OF LID AT 26+95.99, 21.75 RT.
SDCO 3	A 27+28.89	38.41 RTT	144.13	STORM DRAIN CLEANOUT (12")
CB 26	A 27+44.90	38.32 RTT	143.65	CATCH BASIN TYPE 2 (48"). CNTR OF GRATE AT 27+44.88, 37.33 RT.
CB 25	A 27+44.90	22.74 RTT	143.14	CATCH BASIN TYPE 2 (48"). CNTR OF GRATE AT 27+44.50, 21.83 RT.
CB 27	A 27+59.05	34.25 LTT	141.39	CATCH BASIN TYPE 1
SDCO 4	A 27+60.90	38.41 RTT	143.17	STORM DRAIN CLEANOUT (12")
CB 29	A 27+72.33	22.76 RTT	142.32	CATCH BASIN TYPE 1
CB 30	A 27+72.33	28.07 RTT	142.21	CATCH BASIN TYPE 1
CB 33	A 28+27.53	29.16 LTT	140.85	CATCH BASIN TYPE 1

COMPOST-AMENDED BIOFILTRATION SWALE CONSTRUCTION TABLE

DESCRIPTION	STATION	OFFSET	ELEVATION
BEGIN SWALE	26+59.05	35.75' LT	143.93'
END SWALE	27+59.05	34.25' LT	141.39'

1 2 3

KEY PLAN

20 10 0 20 40
SCALE

NO.	DATE	BY	APPR.	REVISIONS

Approved By

TRANSPORTATION DESIGN MANAGER — DATE
M. ARAKELYAN
PROJECT MANAGER — DATE

J. BROWN — DESIGNED BY — DATE
J. FRYE — DRAWN BY — DATE
J. VANIER — CHECKED BY — DATE

City of Bellevue
TRANSPORTATION DEPARTMENT

HDR

124th Ave NE - NE Spring Blvd to NE Ichigo Way

DRAINAGE PLAN
STA. A 26+00 TO END

SHEET NAME DR4

SHT 69 OF 198

GENERAL NOTES:

1. UNLESS OTHERWISE NOTED, ALL DIMENSIONS AND ELEVATIONS ARE IN FEET.
2. SEE DR SHEETS FOR PLAN.
3. PIPE LENGTHS ARE MEASURED FROM CENTER OF STRUCTURE TO CENTER OF STRUCTURE. PIPE LENGTHS AND SLOPES ARE ROUNDED AND THEREFORE REPRESENT AN APPROXIMATION.

95% SUBMITTAL NOT FOR CONSTRUCTION

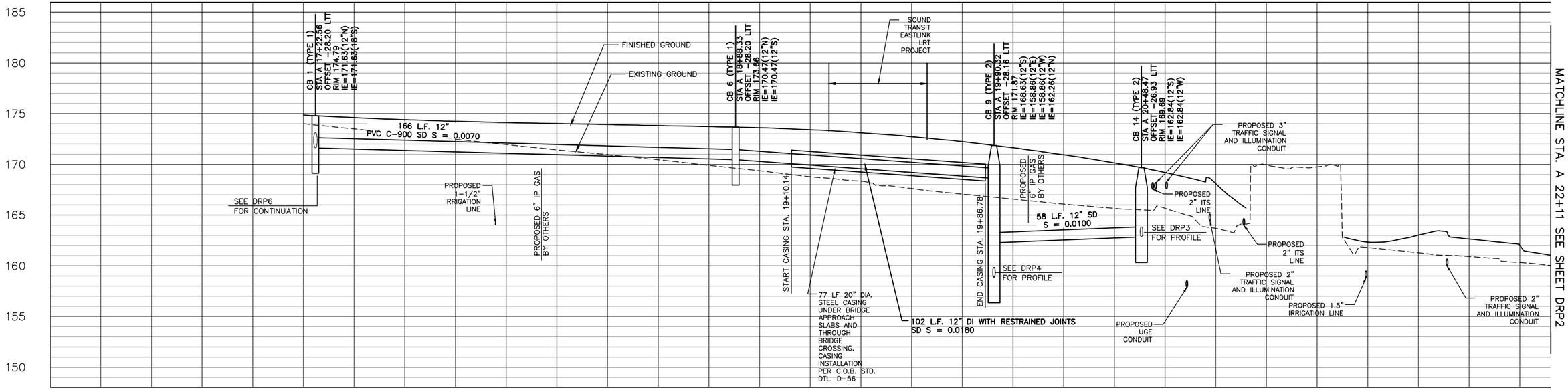

124TH AVE NE STORMWATER PROFILES (WEST)

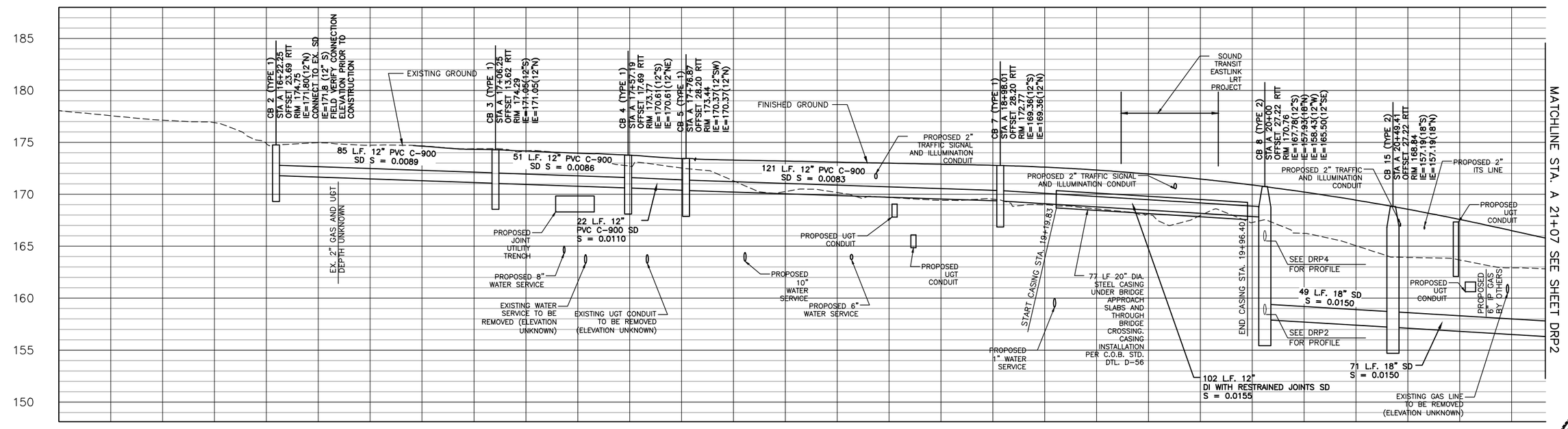

124TH AVE NE STORMWATER PROFILES (EAST)

VERTICAL SCALE IN FEET: 5 0 5 10

HORIZONTAL SCALE IN FEET: 20 0 20 40

NO.	DATE	BY	APPR.	REVISIONS

Approved By

TRANSPORTATION DESIGN MANAGER — DATE
M. ARAKELYAN
PROJECT MANAGER — DATE

J. BROWN — DESIGNED BY — DATE
J. FRYE — DRAWN BY — DATE
J. VANIER — CHECKED BY — DATE

City of Bellevue
TRANSPORTATION DEPARTMENT

HDR

124th Ave NE - NE Spring Blvd to NE Ichigo Way

DRAINAGE PROFILES

SHEET NAME DRP1

SHT 70 OF 198

95% SUBMITTAL NOT FOR CONSTRUCTION

GENERAL NOTES:

1. UNLESS OTHERWISE NOTED, ALL DIMENSIONS AND ELEVATIONS ARE IN FEET.
2. SEE DR SHEETS FOR PLAN.
3. PIPE LENGTHS ARE MEASURED FROM CENTER OF STRUCTURE TO CENTER OF STRUCTURE. PIPE LENGTHS AND SLOPES ARE ROUNDED AND THEREFORE REPRESENT AN APPROXIMATION.

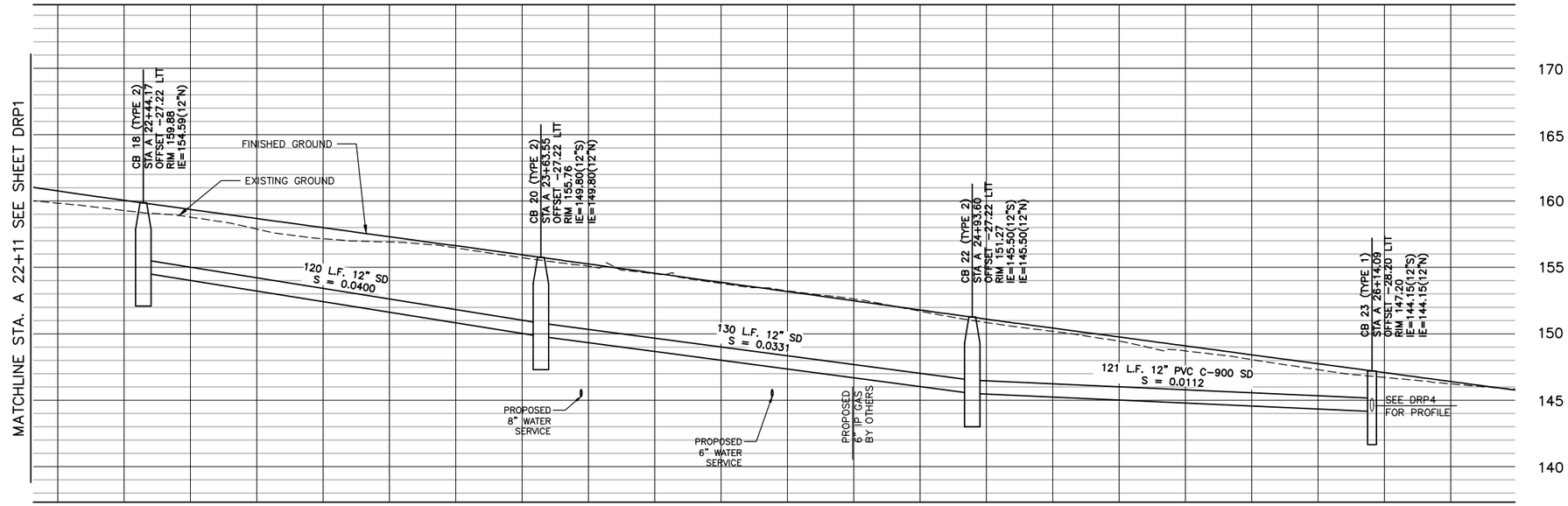

124TH AVE NE STORMWATER PROFILES (WEST)

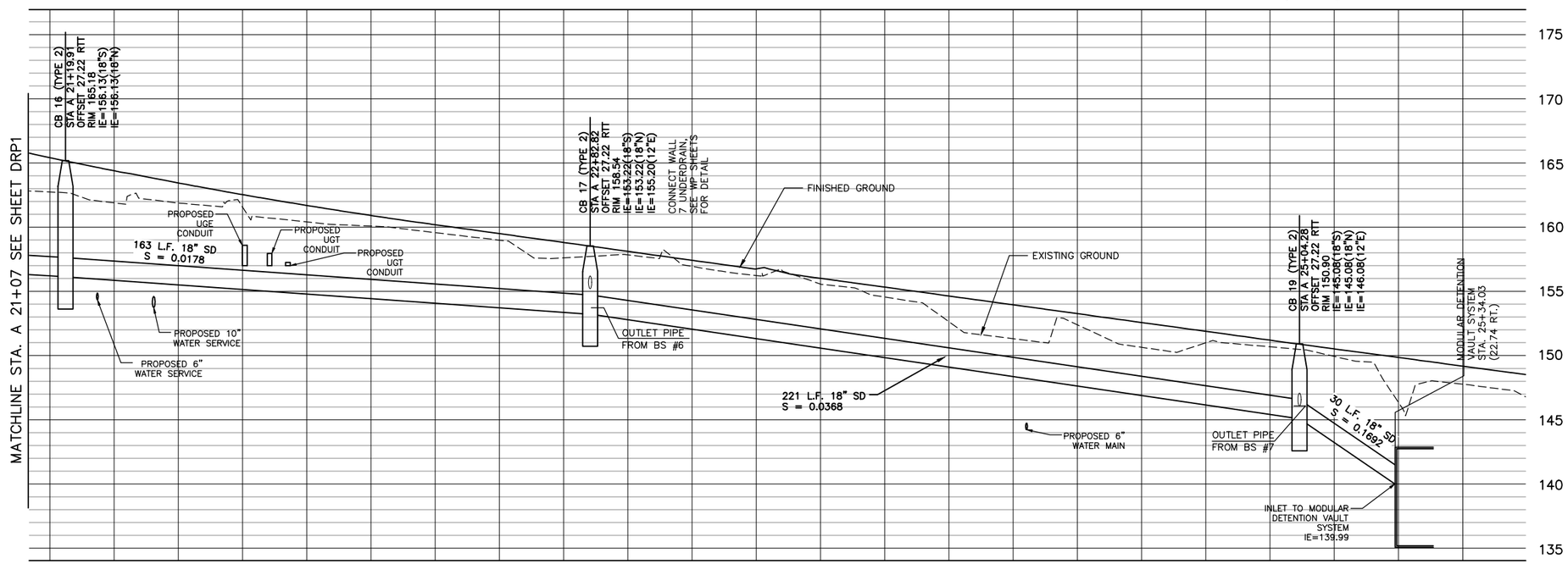

124TH AVE NE STORMWATER PROFILES (EAST) – CONTINUED

5 0 5 10 VERTICAL SCALE IN FEET

20 0 20 40 HORIZONTAL SCALE IN FEET

NO.	DATE	BY	APPR.	REVISIONS

Approved By

TRANSPORTATION DESIGN MANAGER — DATE
M. ARAKELYAN
PROJECT MANAGER — DATE

J. BROWN — DESIGNED BY — DATE
J. FRYE — DRAWN BY — DATE
J. VANIER — CHECKED BY — DATE

City of Bellevue
TRANSPORTATION DEPARTMENT

HDR

124th Ave NE - NE Spring Blvd to NE Ichigo Way

DRAINAGE PROFILES

SHEET NAME DRP2

SHT 71 OF 198

95% SUBMITTAL NOT FOR CONSTRUCTION

GENERAL NOTES:

1. UNLESS OTHERWISE NOTED, ALL DIMENSIONS AND ELEVATIONS ARE IN FEET.
2. SEE DR SHEETS FOR PLAN.
3. PIPE LENGTHS ARE MEASURED FROM CENTER OF STRUCTURE TO CENTER OF STRUCTURE. PIPE LENGTHS AND SLOPES ARE ROUNDED AND THEREFORE REPRESENT AN APPROXIMATION.

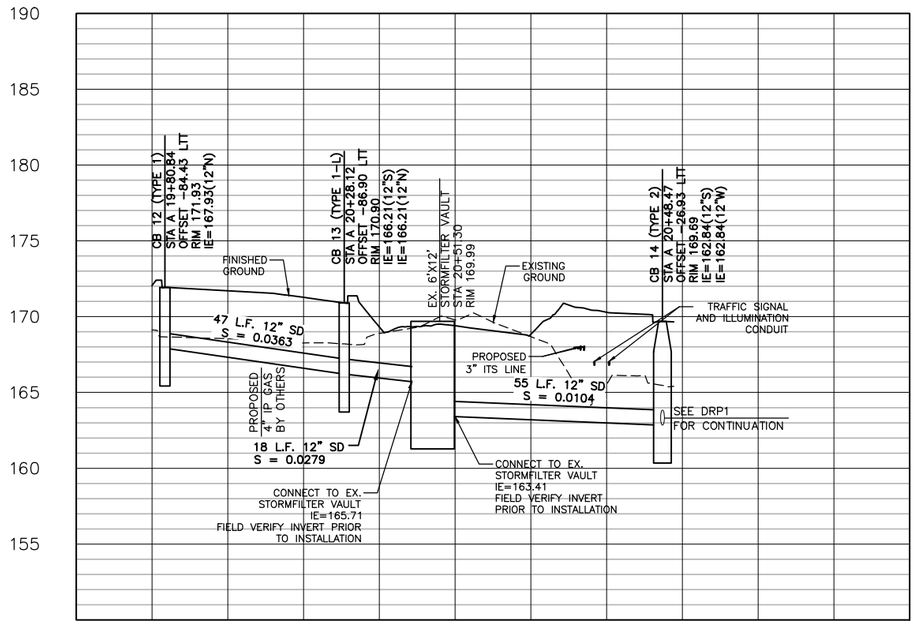

124TH AVE NE STORMWATER PROFILES (LATERALS)

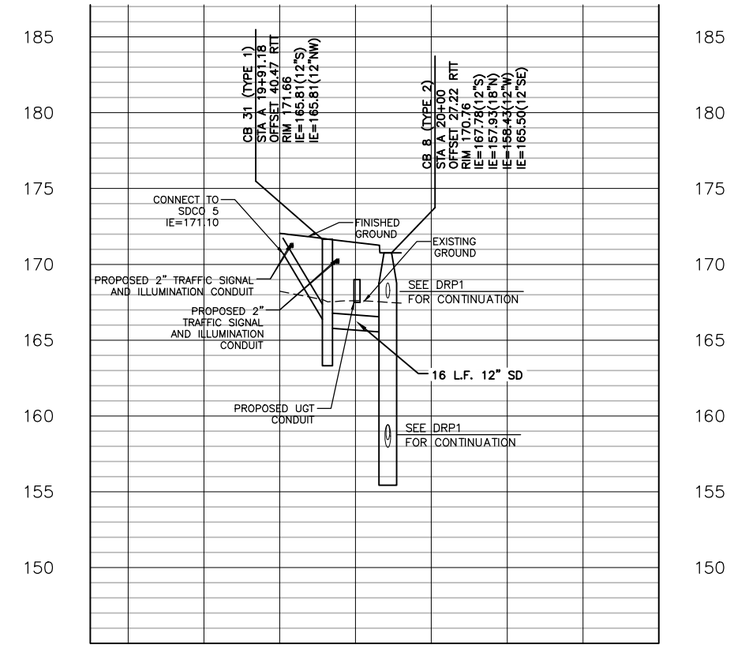

124TH AVE NE STORMWATER PROFILES (LATERALS)

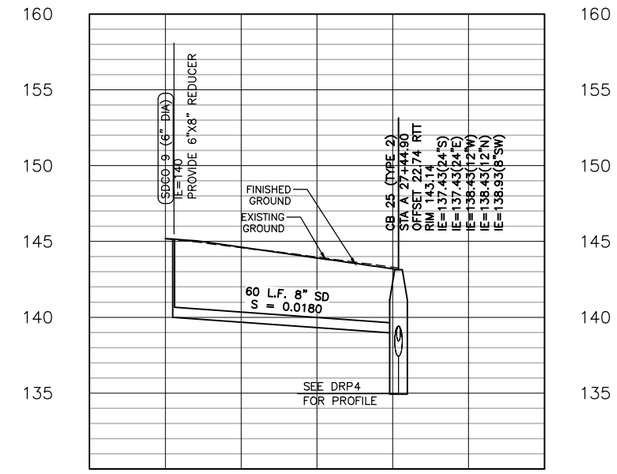

124TH AVE NE STORMWATER PROFILES (LATERALS)

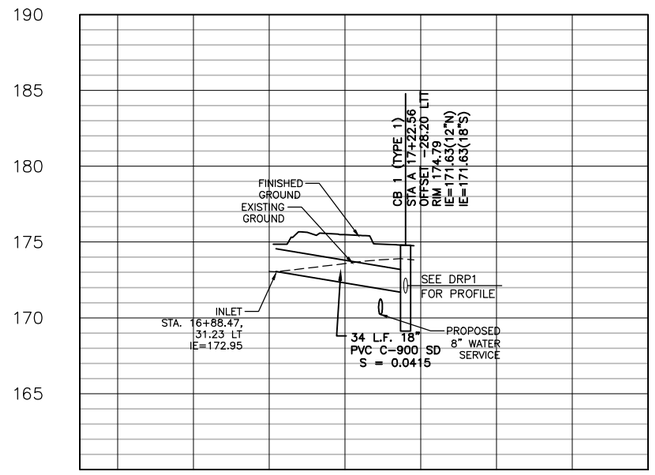

124TH AVE NE STORMWATER PROFILES (LATERALS)

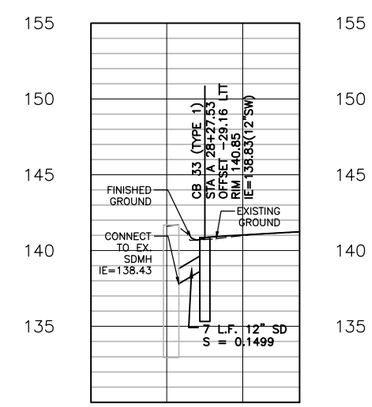

124TH AVE NE STORMWATER PROFILES (LATERALS)

VERTICAL SCALE IN FEET: 5 0 5 10

HORIZONTAL SCALE IN FEET: 20 0 20 40

NO.	DATE	BY	APPR.	REVISIONS

Approved By

TRANSPORTATION DESIGN MANAGER — DATE
M. ARAKELYAN
PROJECT MANAGER — DATE

J. BROWN — DESIGNED BY — DATE
J. FRYE — DRAWN BY — DATE
J. VANIER — CHECKED BY — DATE

City of Bellevue
TRANSPORTATION DEPARTMENT

HDR

124th Ave NE - NE Spring Blvd to NE Ichigo Way

DRAINAGE PROFILES

SHEET NAME DRP3

SHT 72 OF 198

95% SUBMITTAL NOT FOR CONSTRUCTION

GENERAL NOTES:

1. UNLESS OTHERWISE NOTED, ALL DIMENSIONS AND ELEVATIONS ARE IN FEET.
2. SEE DR SHEETS FOR PLAN.
3. PIPE LENGTHS ARE MEASURED FROM CENTER OF STRUCTURE TO CENTER OF STRUCTURE. PIPE LENGTHS AND SLOPES ARE ROUNDED AND THEREFORE REPRESENT AN APPROXIMATION.

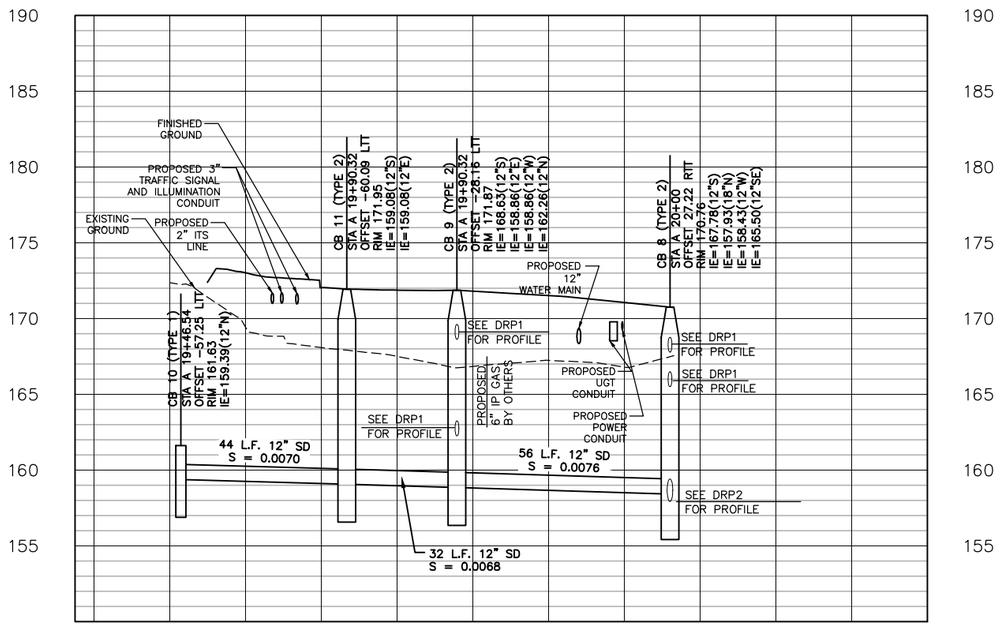

124TH AVE NE STORMWATER PROFILES (LATERALS)

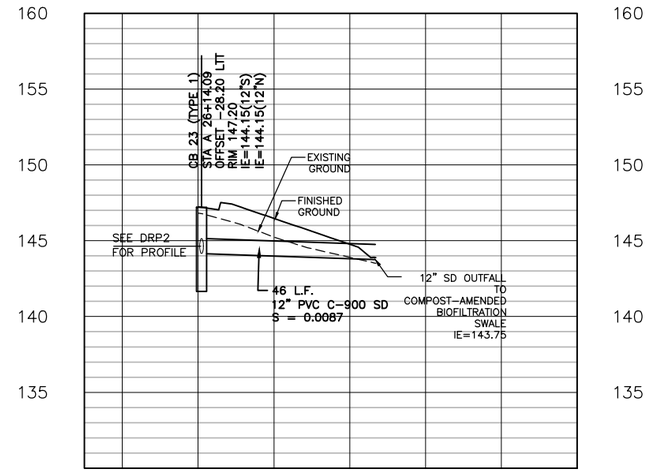

124TH AVE NE STORMWATER PROFILES (LATERALS)

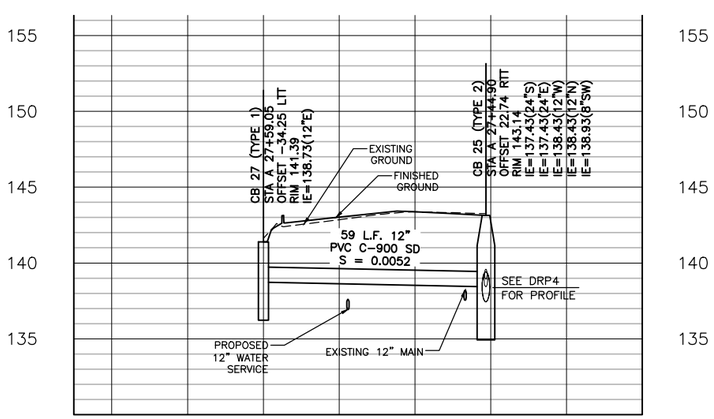

124TH AVE NE STORMWATER PROFILES (LATERALS)

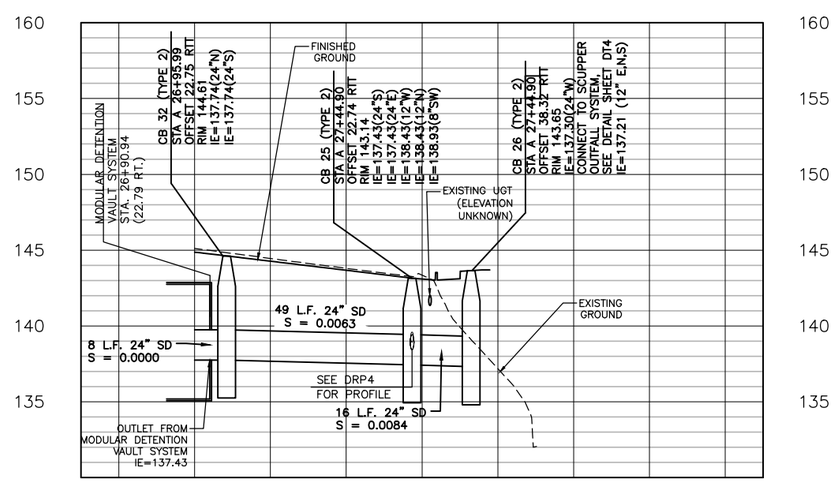

124TH AVE NE STORMWATER PROFILES (LATERALS)

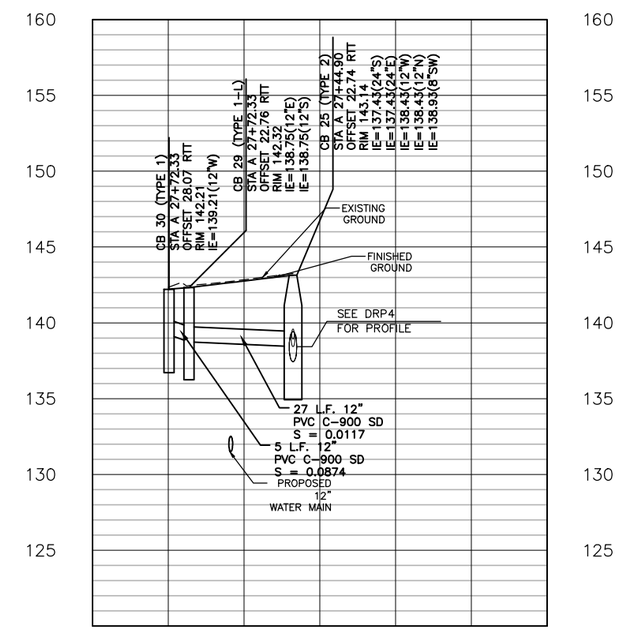

124TH AVE NE STORMWATER PROFILES (LATERALS)

5 0 5 10 VERTICAL SCALE IN FEET

20 0 20 40 HORIZONTAL SCALE IN FEET

NO.	DATE	BY	APPR.	REVISIONS

Approved By

TRANSPORTATION DESIGN MANAGER — DATE
M. ARAKELYAN
PROJECT MANAGER — DATE

J. BROWN — DESIGNED BY — DATE
J. FRYE — DRAWN BY — DATE
J. VANIER — CHECKED BY — DATE

City of Bellevue
TRANSPORTATION DEPARTMENT

HDR

124th Ave NE - NE Spring Blvd to NE Ichigo Way

DRAINAGE PROFILES

SHEET NAME DRP4

SHT 73 OF 198

GENERAL NOTES:

1. UNLESS OTHERWISE NOTED, ALL DIMENSIONS AND ELEVATIONS ARE IN FEET.
2. SEE DR SHEETS FOR PLAN.
3. PIPE LENGTHS ARE MEASURED FROM CENTER OF STRUCTURE TO CENTER OF STRUCTURE. PIPE LENGTHS AND SLOPES ARE ROUNDED AND THEREFORE REPRESENT AN APPROXIMATION.

95% SUBMITTAL NOT FOR CONSTRUCTION

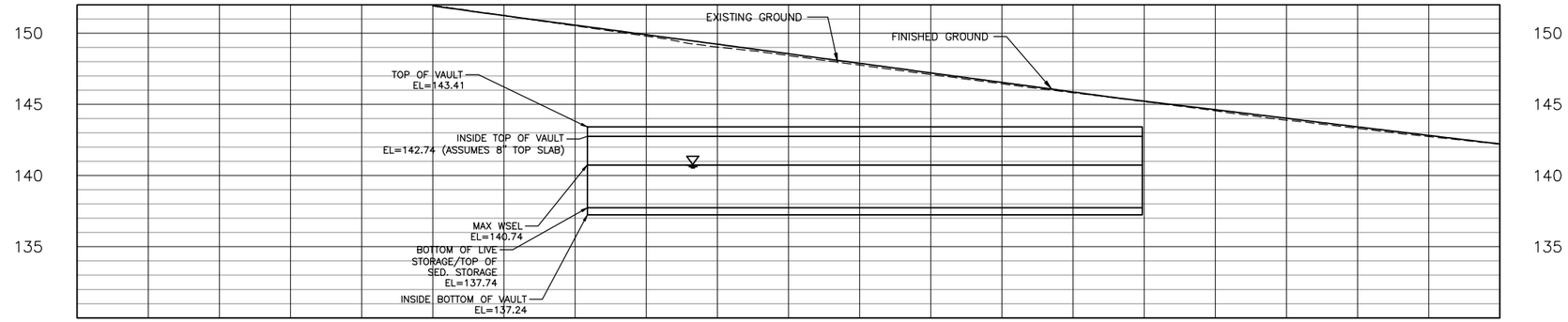

124TH AVE NE PROPOSED VAULT (WEST)

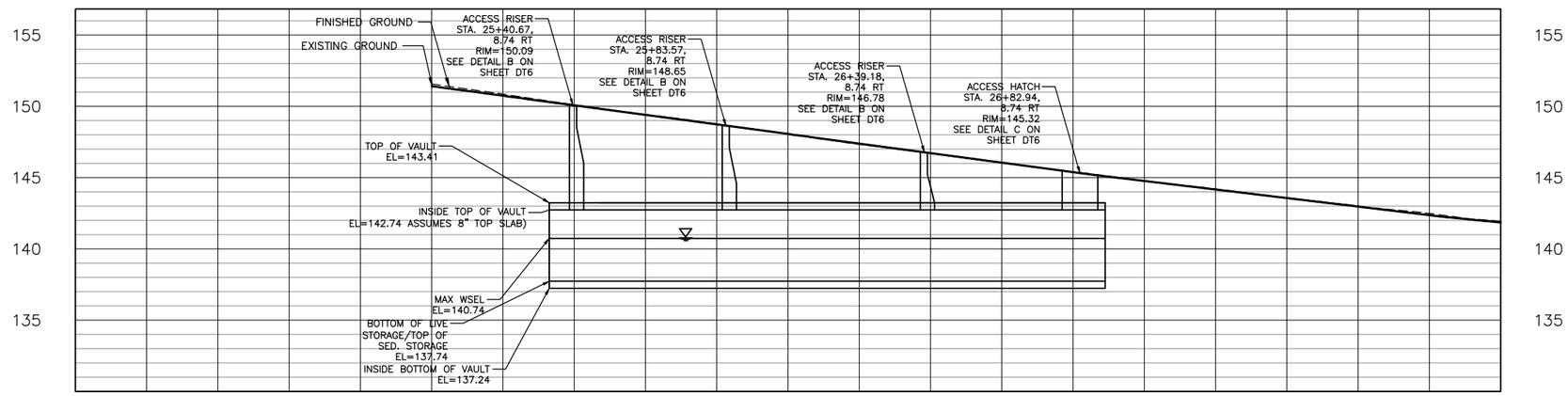

124TH AVE NE PROPOSED VAULT (VAULT ACCESS LOCATIONS AT 8.74' RT)

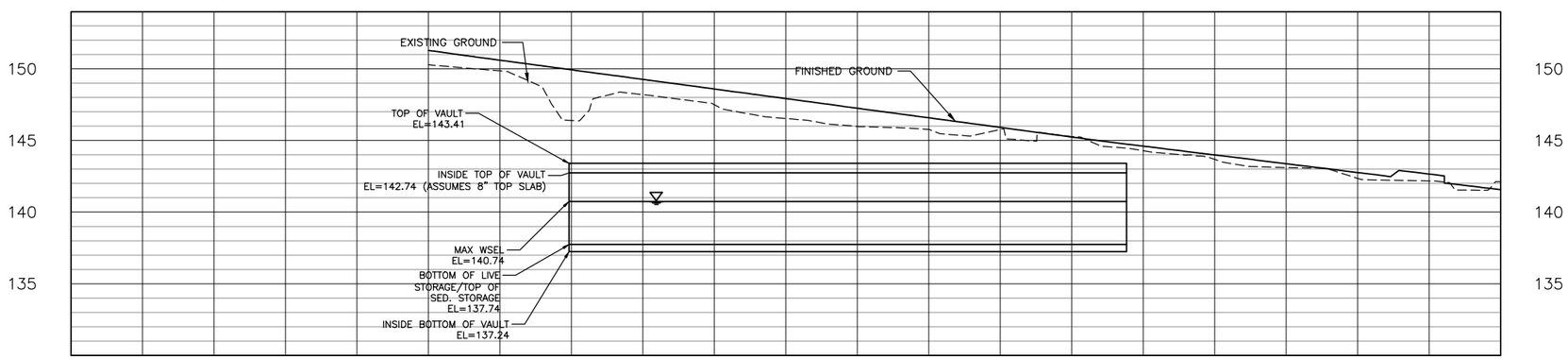

124TH AVE NE PROPOSED VAULT (EAST)

5 0 5 10
VERTICAL SCALE IN FEET

20 0 20 40
HORIZONTAL SCALE IN FEET

NO.	DATE	BY	APPR.	REVISIONS

Approved By

TRANSPORTATION DESIGN MANAGER — DATE
M. ARAKELYAN
PROJECT MANAGER — DATE

J. BROWN
DESIGNED BY — DATE
J. FRYE
DRAWN BY — DATE
J. VANIER
CHECKED BY — DATE

City of Bellevue
TRANSPORTATION DEPARTMENT

HDR

124th Ave NE - NE Spring Blvd to NE Ichigo Way

DRAINAGE PROFILES

SHEET NAME DRP5

SHT 74 OF 198

95% SUBMITTAL NOT FOR CONSTRUCTION

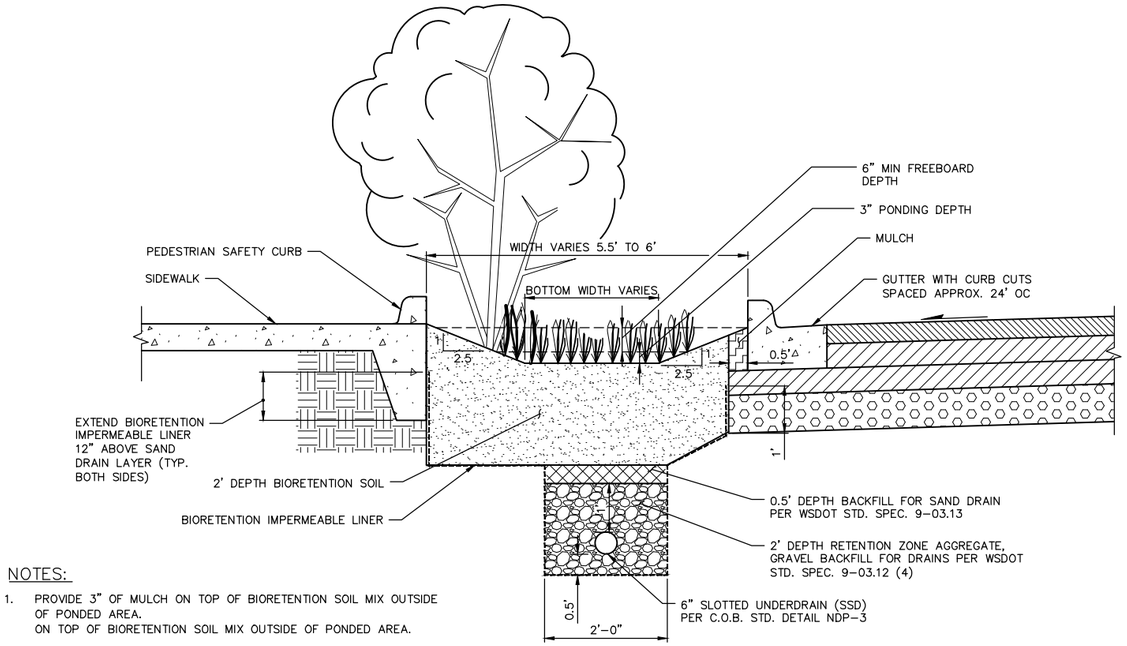

NOTES:

1. PROVIDE 3" OF MULCH ON TOP OF BIORETENTION SOIL MIX OUTSIDE OF PONDED AREA.
   ON TOP OF BIORETENTION SOIL MIX OUTSIDE OF PONDED AREA.

BIORETENTION SWALE (A)

N.T.S.

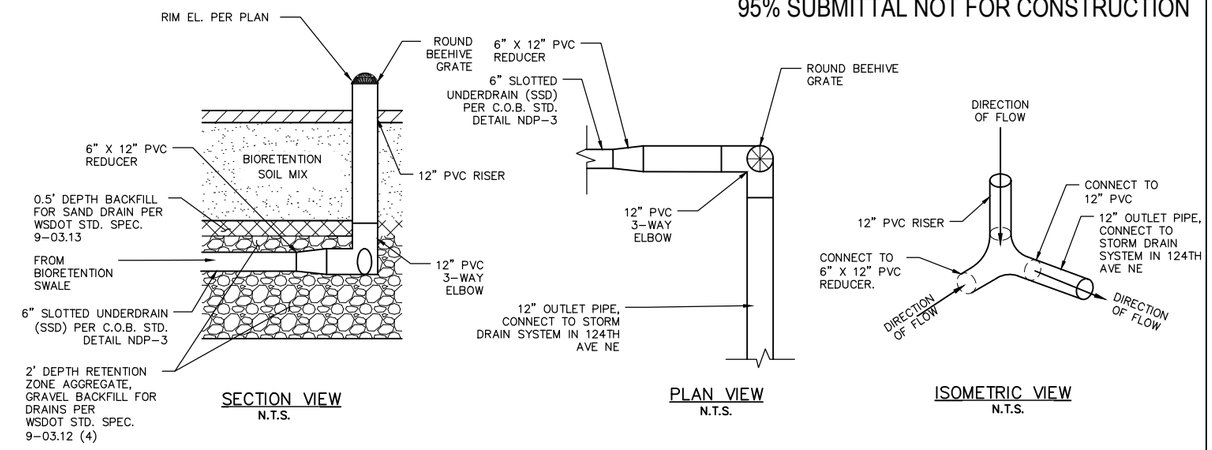

NOTES:

1. ALL FITTINGS TO BE RUBBER GASKETED.
2. ALL PVC RISERS AND FITTINGS INSTALLED ABOVE GRADE SHALL HAVE PROTECTIVE ULTRAVIOLET COATING, OPAQUE LATEX WATER BASED PAINT OR APPROVED EQUAL.
   MATCH PAINT COLOR TO PIPE COLOR.
3. SECURE BEEHIVE GRATE TO PVC RISER WITH SET SCREWS.

OVERFLOW STRUCTURE (B)

N.T.S.

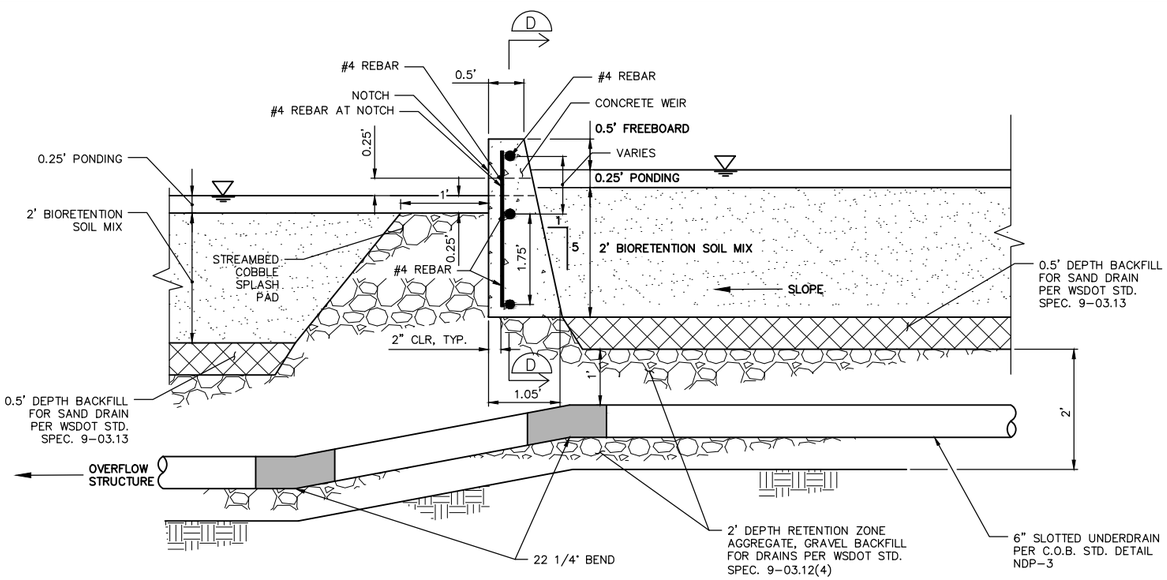

BIORETENTION CONCRETE WEIR – PROFILE VIEW (C)

N.T.S.

WEIR ELEVATION SCHEDULE			
BIORETENTION SWALE #	STATION	TOP OF WEIR ELEVATION	NOTCH ELEVATION
6	22+26.53	161.07	160.57
6	22+55.59	160.10	159.60
7	24+65.14	151.38	150.88

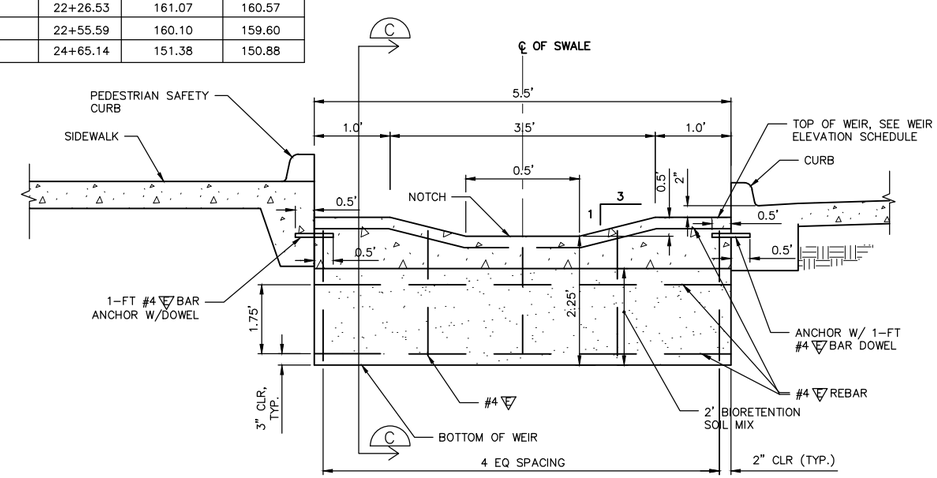

BIORETENTION CONCRETE WEIR – SECTION VIEW (D)

N.T.S.

NOTES:

1. BIORETENTION WEIR IS TO BE CONSTRUCTED LEVEL ACROSS BIORETENTION SWALE TO PROMOTE UNIFORM FLOW DISTRIBUTION.
2. ALL CONCRETE SHALL BE CONC. CL 4000 MIN.
3. ALL REINF. BARS AND DOWELS SHALL BE EPOXY COATED

NO.	DATE	BY	APPR.	REVISIONS

Approved By

TRANSPORTATION DESIGN MANAGER — DATE
M. ARAKELYAN
PROJECT MANAGER — DATE

J. BROWN — DESIGNED BY — DATE
J. FRYE — DRAWN BY — DATE
J. VANIER — CHECKED BY — DATE

City of Bellevue
TRANSPORTATION DEPARTMENT

HDR

124th Ave NE - NE Spring Blvd to NE Ichigo Way

DRAINAGE DETAILS
BIORETENTION

SHEET NAME DT1

SHT 75 OF 198

95% SUBMITTAL NOT FOR CONSTRUCTION

GENERAL NOTES:

1. OTHERWISE NOTED, DIMENSIONS ARE IN FEET.

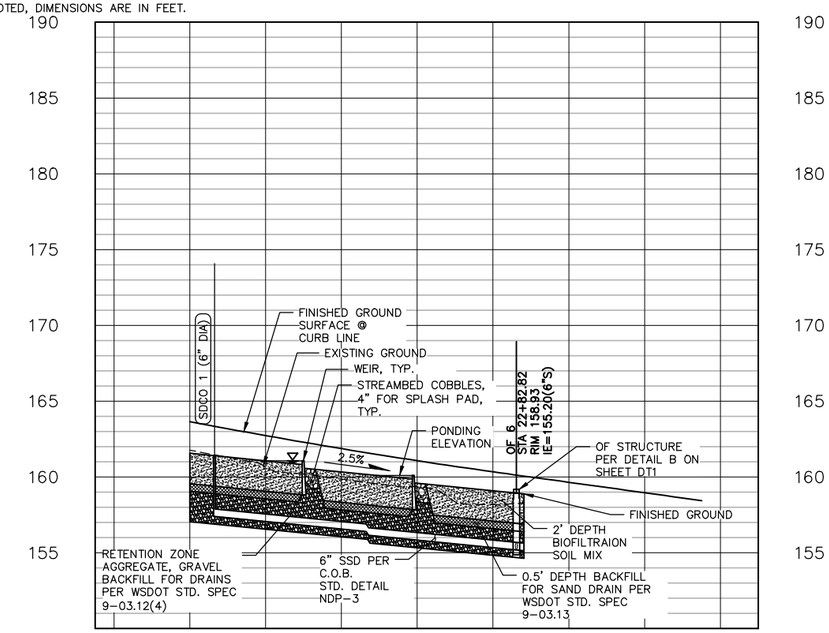

BIORETENTION SWALE 6 – PROFILE (A –)

N.T.S.

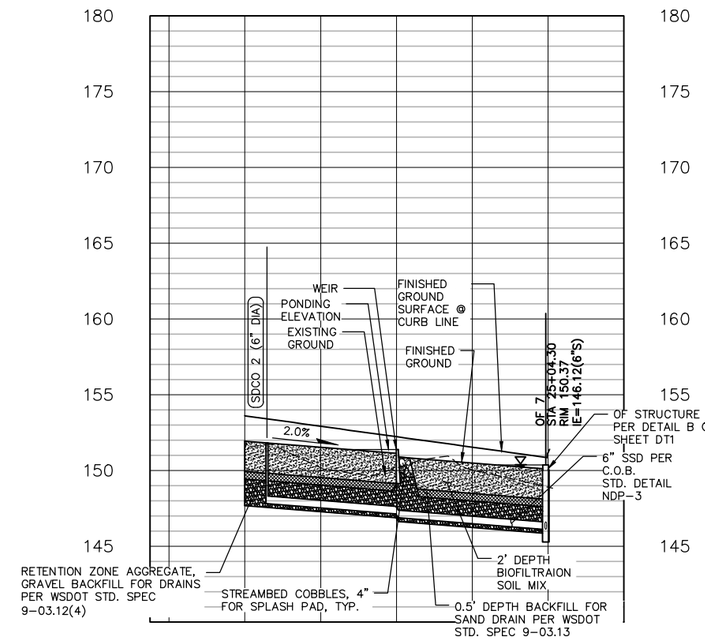

BIORETENTION SWALE 7 – PROFILE (B –)

N.T.S.

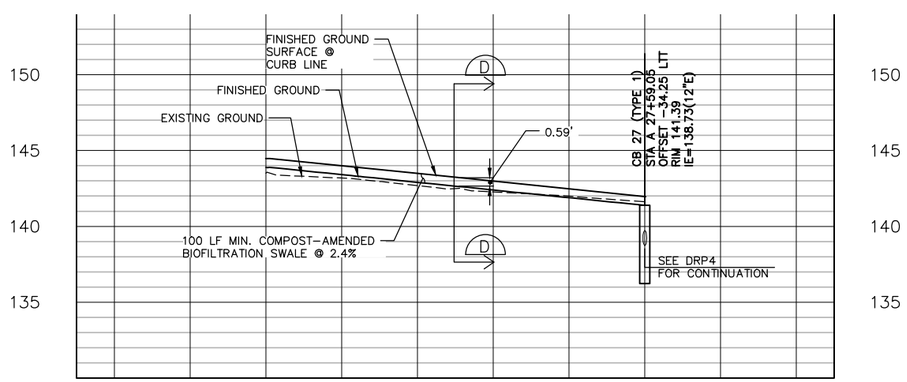

COMPOST AMENDED BIOFILTRATION SWALE – PROFILE (C –)

N.T.S.

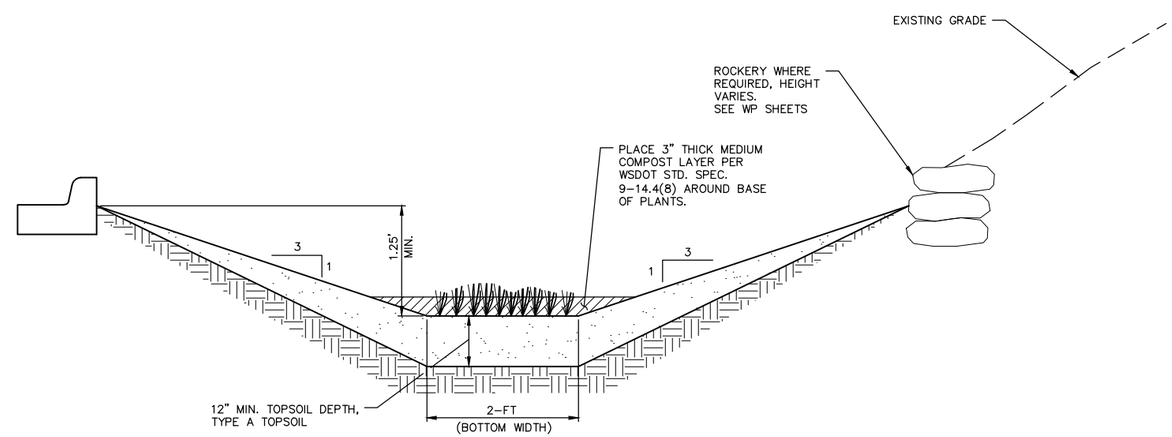

COMPOST AMENDED BIOFILTRATION SWALE – SECTION (D –)

N.T.S.

NOTES:

1. APPLY BIOFILTRATION SEED MIX FOLLOWING INSTALLATION OF COMPOST BLANKET. SEE LANDSCAPE PLAN PLANS FOR SEEDING LIMITS.

NO.	DATE	BY	APPR.	REVISIONS

Approved By

TRANSPORTATION DESIGN MANAGER — DATE
M. ARAKELYAN
PROJECT MANAGER — DATE

J. BROWN — DESIGNED BY — DATE
J. FRYE — DRAWN BY — DATE
J. VANIER — CHECKED BY — DATE

City of Bellevue
TRANSPORTATION DEPARTMENT

124th Ave NE - NE Spring Blvd to NE Ichigo Way

DRAINAGE DETAILS
BIORETENTION

SHEET NAME DT2

SHT 76 OF 198

GENERAL NOTES:

1. UNLESS OTHERWISE NOTED, ALL DIMENSIONS ARE IN FEET.

95% SUBMITTAL NOT FOR CONSTRUCTION

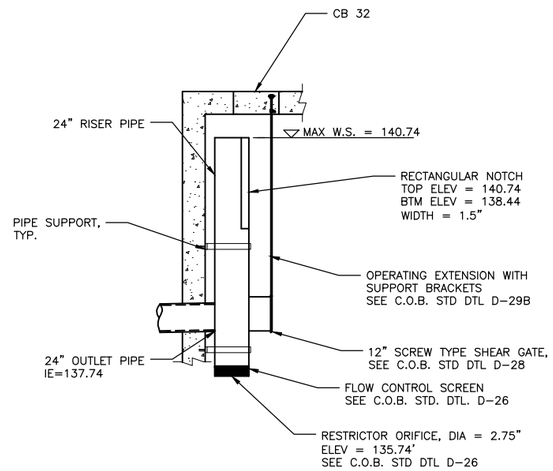

FLOW CONTROL STRUCTURE (A / –)

N.T.S.

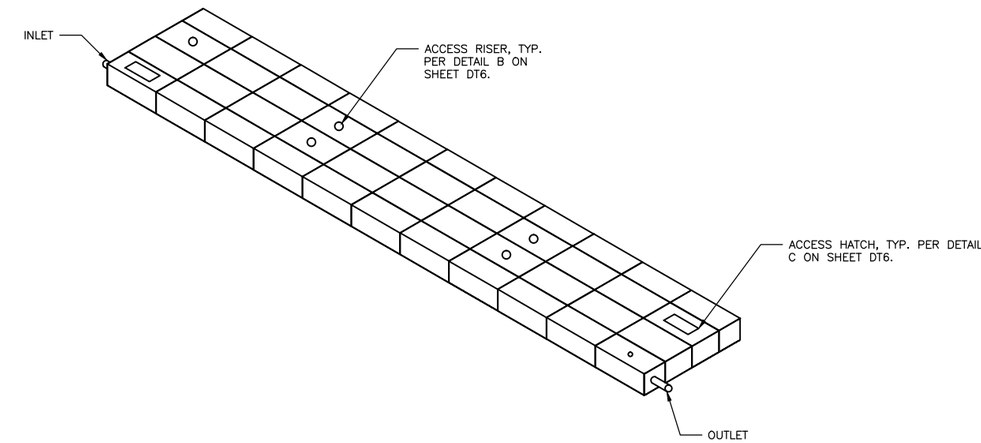

MODULAR DETENTION VAULT SYSTEM SCHEMATIC (B / –)

N.T.S.

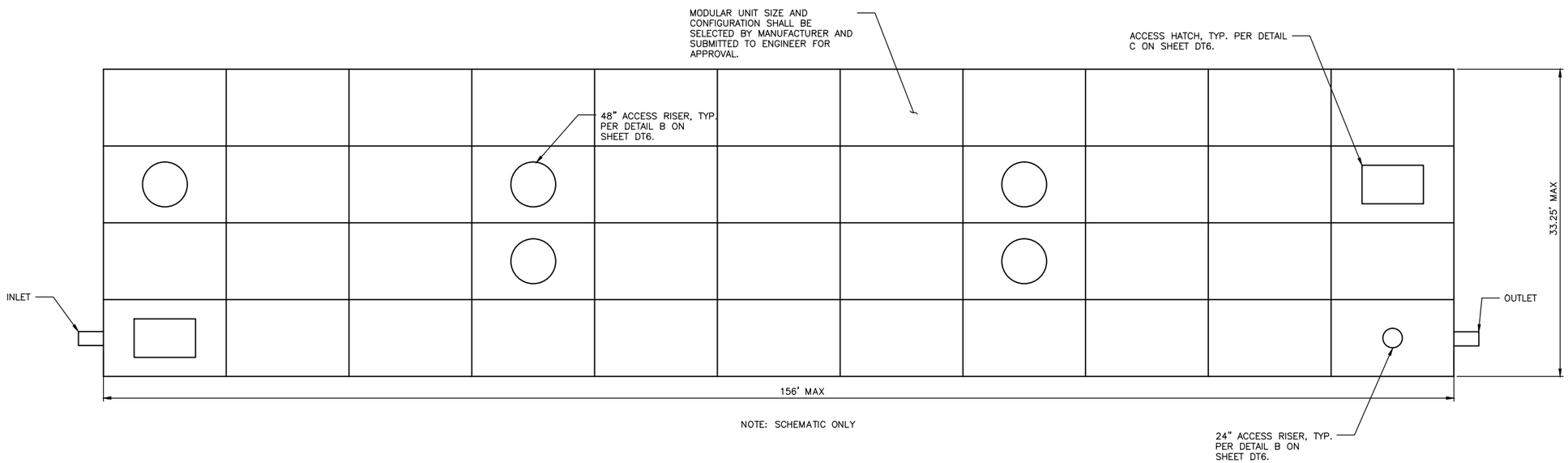

NOTE: SCHEMATIC ONLY

MODULAR DETENTION VAULT SYSTEM LAYOUT (C / –)

N.T.S.

NO.	DATE	BY	APPR.	REVISIONS

Approved By

TRANSPORTATION DESIGN MANAGER — DATE

M. ARAKELYAN

PROJECT MANAGER — DATE

J. BROWN — DESIGNED BY — DATE

J. FRYE — DRAWN BY — DATE

J. VANIER — CHECKED BY — DATE

City of Bellevue

TRANSPORTATION DEPARTMENT

124th Ave NE - NE Spring Blvd to NE Ichigo Way

DRAINAGE DETAILS
DETENTION SYSTEM

SHEET NAME DT3

SHT 77 OF 198

GENERAL NOTES:

1. UNLESS OTHERWISE NOTED, ALL DIMENSIONS ARE IN FEET.
2. ACCESS RISER AND HATCH LOCATIONS SHOWN ARE APPROXIMATE. COORDINATE ACCESS RISER LOCATIONS WITH MODULAR DETENTION VAULT SYSTEM MANUFACTURER RECOMMENDATIONS AND ROADWAY CHANNELIZATION – DO NOT LOCATE IN TRAVEL WHEEL PATH. PROVIDE ACCESS RISERS OR HATCHES OVER INLET AND OUTLET PIPES. MAXIMUM SPACING OF ACCESS RISERS IS 50' IN ALL DIRECTIONS.
3. SEE SHEET DRP5 FOR MODULAR DETENTION VAULT SYSTEM PROFILES.

SECTION 33, T. 25 N., R5E., W.M.
KING COUNTY

95% SUBMITTAL NOT FOR CONSTRUCTION

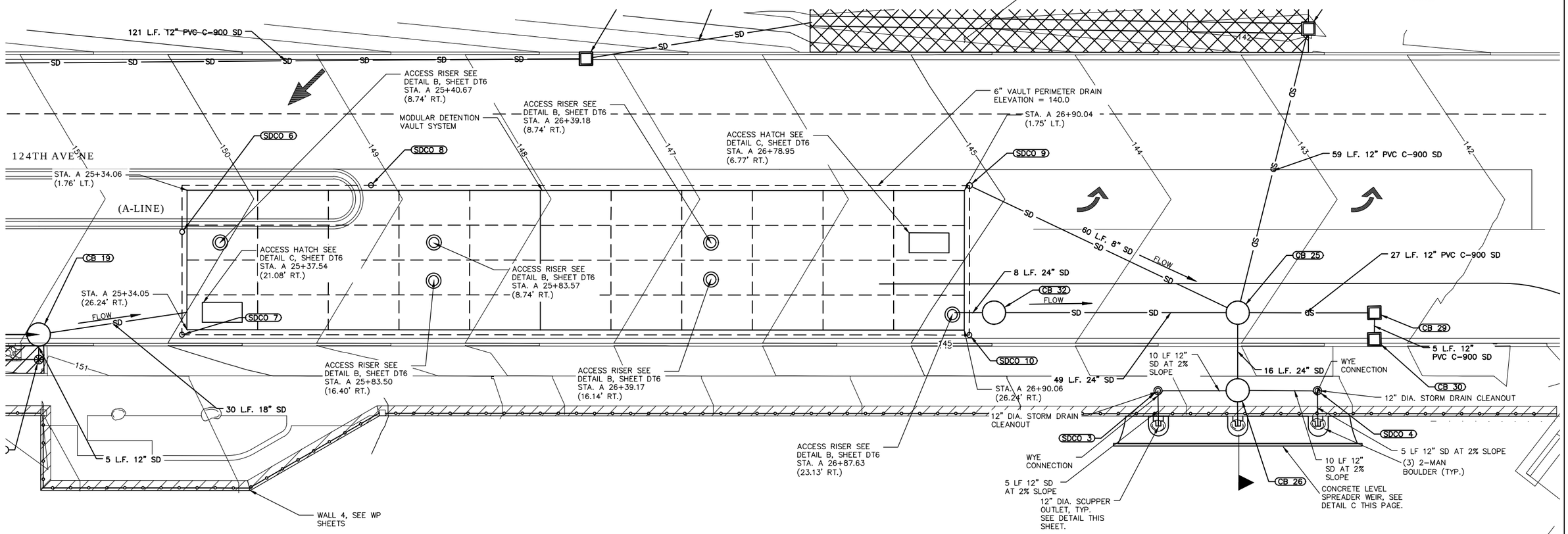

MODULAR DETENTION VAULT SYSTEM LAYOUT (A)

SCALE: 1"=10'

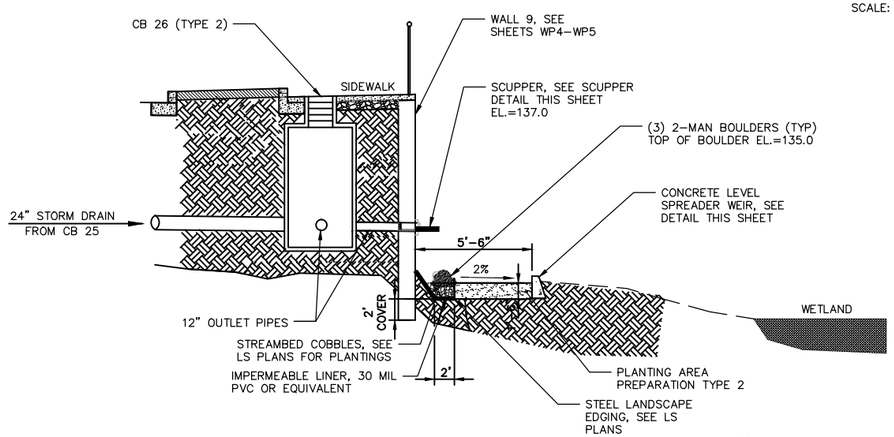

OUTFALL SYSTEM – CROSS SECTION (B)

N.T.S.

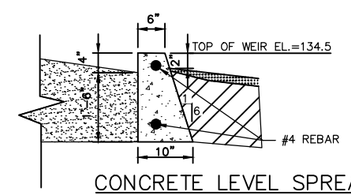

CONCRETE LEVEL SPREADER WEIR DETAIL (C)

N.T.S.

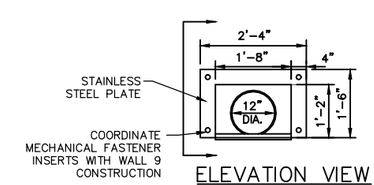

ELEVATION VIEW

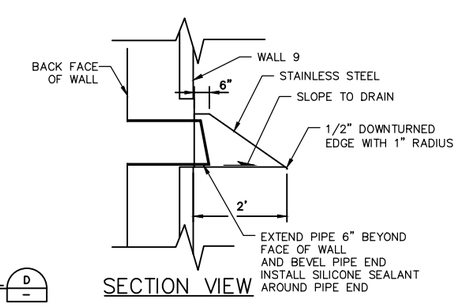

SCUPPER DETAIL (D)

N.T.S.

SECTION VIEW

NO.	DATE	BY	APPR.	REVISIONS

Approved By

TRANSPORTATION DESIGN MANAGER — DATE
M. ARAKELYAN
PROJECT MANAGER — DATE

J. BROWN — DESIGNED BY — DATE
J. FRYE — DRAWN BY — DATE
J. VANIER — CHECKED BY — DATE

City of Bellevue
TRANSPORTATION DEPARTMENT

HDR

124th Ave NE - NE Spring Blvd to NE Ichigo Way

DRAINAGE DETAILS
DETENTION SYSTEM

SHEET NAME DT4

SHT 78 OF 198

GENERAL NOTES:

1. UNLESS OTHERWISE NOTED, ALL DIMENSIONS ARE IN FEET.

95% SUBMITTAL NOT FOR CONSTRUCTION

DETENTION INSTALLATION NOTES:

1. CONSTRUCTION, INCLUDING BACKFILLING, MUST BE COMPLETED WITHIN ROADWAY CLOSURE OF 7 DAYS.

1. MODULAR DETENTION VAULT UNITS SHALL BE MANUFACTURED ACCORDING TO SHOP DRAWINGS APPROVED BY THE ENGINEER. THE SHOP DRAWINGS SHALL INDICATE SIZE AND LOCATIONS OF ROOF OPENINGS AND INLET/OUTLET PIPE OPENINGS.

2. MODULAR DETENTION VAULTS SHALL BE INSTALLED IN ACCORDANCE WITH SPECIFICATIONS AND MANUFACTURER RECOMMENDATIONS. THE FOLLOWING ADDITIONS AND/OR EXCEPTIONS SHALL APPLY:

A. DETENTION VAULT SHALL BE PLACED ON LEVEL PAD OF 3/4" AGGREGATE THAT EXTENDS 2'-0" PAST THE OUTSIDE OF THE SYSTEM, PER SPECIFICATIONS AND MANUFACTURER RECOMMENDATIONS.

B. UNITS SHALL BE PLACED SUCH THAT THE MAXIMUM SPACE BETWEEN ADJACENT MODULES DOES NOT EXCEED 3/4". IF THE SPACE BETWEEN EXCEEDS 3/4" THE UNITS SHALL BE RESET WITH APPROPRIATE ADJUSTMENTS MADE TO LINE AND GRADE TO BRING THE SPACE INTO SPECIFICATION.

C. THE PERIMETER HORIZONTAL JOINT OF THE UNITS SHALL BE SEALED TO THE FOOTING WITH JOINT SEALER ACCORDING TO ASTM C89-08.8 AND 8-12 OR MANUFACTURER RECOMMENDATIONS.

D. ALL EXTERIOR JOINTS BETWEEN ADJACENT UNITS SHALL BE WATER TIGHT TO PREVENT WATER FROM ENTERING AND EXITING THROUGH JOINTS AND INSTALLED IN ACCORDANCE WITH SPECIFICATIONS AND MANUFACTURER RECOMMENDATIONS.

E. THE FILL PLACED AROUND THE MODULAR DETENTION VAULT UNITS MUST BE POSITIONED ON BOTH SIDES AT THE SAME TIME AND TO APPROXIMATELY THE SAME ELEVATION. AT NO TIME SHALL THE FILL BEHIND ONE SIDE WALL BE MORE THAN 2'-0" HIGHER THAN THE FILL ON THE OPPOSITE SIDE. BACKFILL SHALL BE COMPACTED TO 95% STANDARD PROCTOR DENSITY OR OTHERWISE SPECIFIED BY ENGINEER. BACKFILL MATERIAL SHALL BE FREE DRAINING AND CONSIST OF GRAVEL BACKFILL PER WSDOT STD. SPEC 9-03.12(2).

MODULAR DETENTION VAULT SYSTEM GENERAL NOTES:

1. TOTAL COVER: MIN. 1.75' MAX. 7.5' CONSULT MANUFACTURER FOR ADDITIONAL COVER OPTIONS.
2. MODULAR DETENTION VAULT UNITS SHALL BE DESIGNED FOR AN H30 RUNNING LOAD WITH 1.75' MIN. COVER. FOR STRUCTURAL CALCULATIONS REFER TO SOIL PARAMETERS PRESENTED IN GEOTECHNICAL REPORT FOR DETENTION VAULTS.
3. ALL DIMENSIONS AND SOIL CONDITIONS SHALL BE VERIFIED IN THE FIELD PRIOR TO INSTALLATION.
4. FOR STRUCTURAL CALCULATIONS THE GROUND WATER TABLE IS ASSUMED TO BE AT ELEVATION 140.00. IF WATER TABLE IS DIFFERENT THAN ASSUMED, CONTACT ENGINEER.
5. FOR FLOTATION CALCULATIONS THE GROUND WATER TABLE IS ASSUMED TO BE AT ELEVATION 140.00. IF WATER TABLE IS DIFFERENT THAN ASSUMED, CONTACT ENGINEER.
6. PROVIDE WATER TIGHT APPLICATION TO PREVENT WATER FROM ENTERING OR EXITING THROUGH JOINTS.
7. PROVIDE REQUIRED LIVE STORAGE VOLUME OF 12,780 CUBIC FEET MINIMUM, WITH MINIMUM WATER SURFACE ELEVATION OF 137.74 AND MAXIMUM OF 140.74
8. CONCRETE SHALL HAVE A MINIMUM 28 DAY COMPRESSIVE STRENGTH OF 4000 PSI. ALL REINFORCING BARS SHALL MEET ASTM A 615 GRADE 60 OR AASHTO M 31 GRADE 60

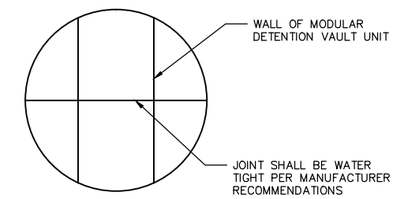

JOINT DETAIL B
N.T.S.

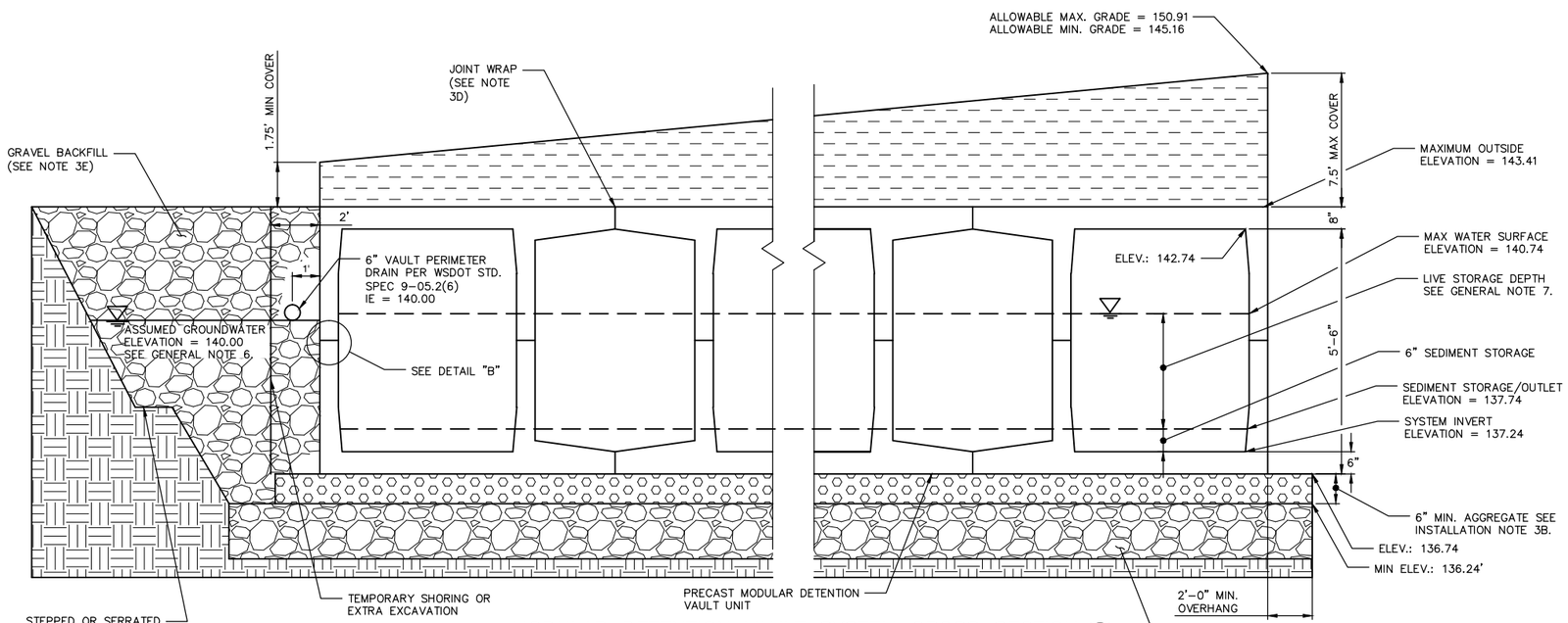

MODULAR DETENTION VAULT SYSTEM CROSS SECTION A
N.T.S.

NO.	DATE	BY	APPR.	REVISIONS

Approved By

TRANSPORTATION DESIGN MANAGER — DATE
M. ARAKELYAN
PROJECT MANAGER — DATE

J. BROWN — DESIGNED BY — DATE
J. FRYE — DRAWN BY — DATE
J. VANIER — CHECKED BY — DATE

City of Bellevue
TRANSPORTATION DEPARTMENT

HDR

124th Ave NE - NE Spring Blvd to NE Ichigo Way

DRAINAGE DETAILS
DETENTION SYSTEM

SHEET NAME DT5

GENERAL NOTES:

1. UNLESS OTHERWISE NOTED, ALL DIMENSIONS ARE IN FEET.

95% SUBMITTAL NOT FOR CONSTRUCTION

PIPE OPENING NOTES

1. MINIMUM EDGE DISTANCE FOR AN OPENING ON THE OUTSIDE WALL SHALL BE NO LESS THAN 1'–0" OR PER MANUFACTURER RECOMMENDATION.
2. ALL OPENINGS MUST RETAIN AT LEAST 1'–0" OF CLEARANCE IN ALL DIRECTIONS FROM THE EDGE OF THE MODULAR DETENTION VAULT UNITS.
3. CONNECTING PIPES SHALL BE INSTALLED WITH A 1'–0" CONCRETE COLLAR, AND A CONCRETE CRADLE FOR AT LEAST ONE PIPE LENGTH, AS SHOWN. A STRUCTURAL GRADE CONCRETE OR GROUT WITH A MINIMUM 28 DAY COMPRESSIVE STRENGTH OF 3000 PSI SHALL BE USED.
4. THE ANNULAR SPACE BETWEEN THE PIPE AND THE HOLE SHALL BE FILLED WITH NON–SHRINK GROUT.

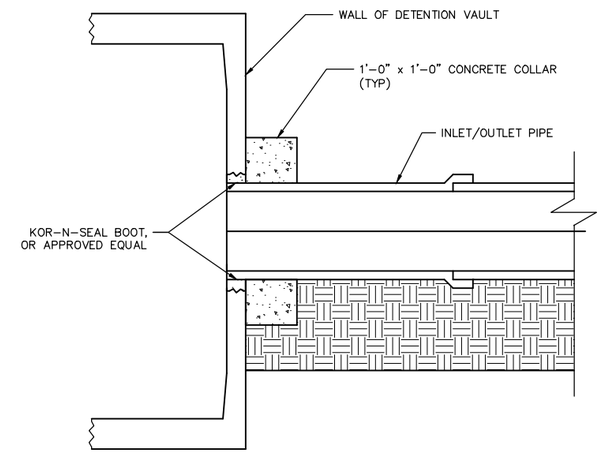

PIPE CONNECTION (A)
N.T.S

ACCESS OPENING NOTES

1. ACCESS OPENING AT RISER LOCATIONS FOR THE MODULAR DETENTION VAULT SYSTEM SHALL BE 2'–0" MINIMUM DIAMETER AND 4'–0" MAXIMUM DIAMETER. SEE DETAIL C ON SHEET DT3 FOR OPENING SIZES.
2. PROVIDE PLASTIC COATED STEEL STEPS AT ALL ACCESS RISER AND HATCH LOCATIONS. THE HIGHEST STEP IN THE UNITS IS TO BE PLACED A DISTANCE OF 1'–0" BELOW THE TOP EDGE OR INSIDE EDGE OF THE VAULT WALL. ALL ENSUING STEPS SHALL BE PLACED WITH A MAXIMUM DISTANCE OF 1'–4" BETWEEN THEM. STEPS MAY BE MOVED OR ALTERED TO AVOID OPENINGS OR OTHER IRREGULARITIES IN THE UNIT.
3. IF FEASIBLE, LOCATE LIFTING INSERTS TO COINCIDE WITH ACCESS OPENINGS.
4. ACCESS OPENINGS MAY NOT INTERFERE WITH INLET AND/OR OUTLET OPENINGS.
5. ACCESS RISER AND HATCH LOCATIONS SHOWN ARE APPROXIMATE. COORDINATE ACCESS RISER AND HATCH LOCATIONS WITH MODULAR DETENTION VAULT SYSTEM MANUFACTURER RECOMMENDATIONS AND ROADWAY CHANNELIZATION – DO NOT LOCATE IN TRAVEL WHEEL PATH. PROVIDE ACCESS RISERS OR HATCHES OVER INLET AND OUTLET PIPES. MAXIMUM SPACING OF ACCESS RISERS IS 50' IN ALL DIRECTIONS.
6. USE PRECAST ADJUSTING RINGS AS NEEDED TO MEET GRADE. FOR COVER OVER 2' USE PRECAST BARREL OR CONE SECTIONS. AT A MINIMUM INSTALL 1"–4" ADJUSTING RING BETWEEN THE VAULT TOP AND THE RING CASING.

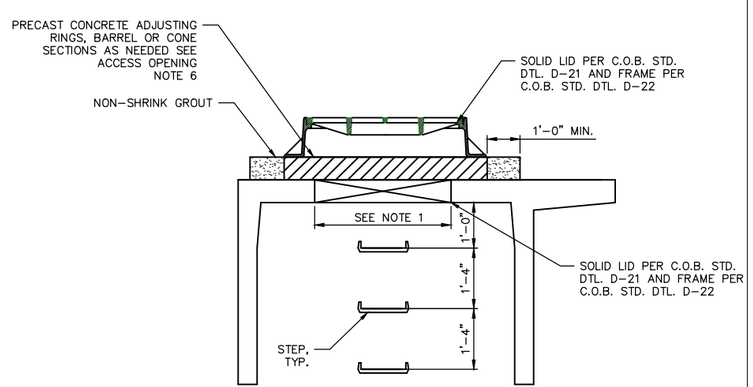

ACCESS RISER/STAIR DETAIL (B)
N.T.S.

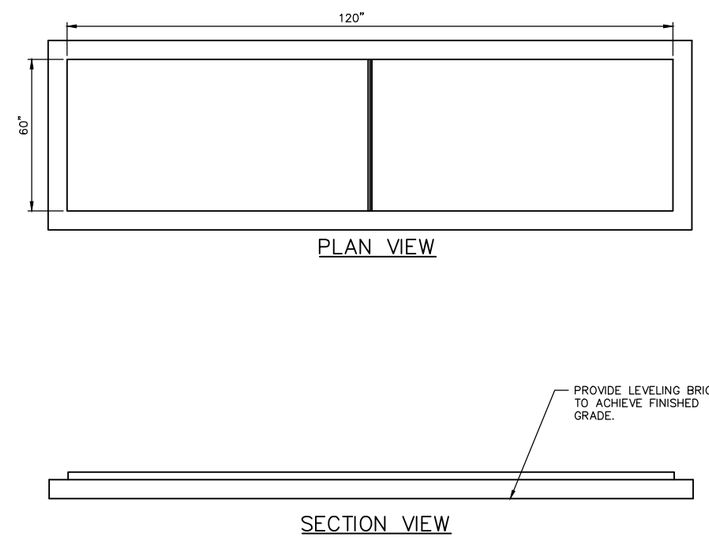

ACCESS HATCH DETAIL (C)
N.T.S.

NO.	DATE	BY	APPR.	REVISIONS

Approved By

TRANSPORTATION DESIGN MANAGER — DATE
M. ARAKELYAN
PROJECT MANAGER — DATE

J. BROWN — DESIGNED BY — DATE
J. FRYE — DRAWN BY — DATE
J. VANIER — CHECKED BY — DATE

City of Bellevue
TRANSPORTATION DEPARTMENT

HDR

124th Ave NE - NE Spring Blvd to NE Ichigo Way

DRAINAGE DETAILS
DETENTION SYSTEM

SHEET NAME DT6

SHT 80 OF 198

SECTION 28, T. 25 N., R5E., W.M.
KING COUNTY

95% SUBMITTAL NOT FOR CONSTRUCTION

GENERAL NOTES:

1. UNLESS OTHERWISE NOTED, ALL DIMENSIONS ARE IN FEET.
2. THE CONTRACTOR SHALL POTHOLE ALL POTENTIAL CONFLICTS WITH UTILITIES TO VERIFY THE HORIZONTAL AND VERTICAL LOCATION OF THE EXISTING UTILITIES. WHERE THE VERTICAL DISTANCE BETWEEN UTILITIES IS LESS THAN 6 INCHES, THE CONTRACTOR SHALL PROVIDE AN O.D. X O.D. X 2.5 INCH ETHAFOAM PAD PER THE SPECIAL PROVISIONS 7-08.3(2). THE O.D. DIMENSION IS BASED ON "THE LARGEST DIAMETER PIPE IN THE CROSSING CONFLICT", FOR THAT PARTICULAR LOCATION.
3. CALL UTILITIES UNDERGROUND LOCATION CENTER AT 1-800-424-5555 48 HOURS PRIOR TO CONSTRUCTION.

LEGEND

- PROPOSED POWER POLE
- PROPOSED GAS VALVE
- PROPOSED CATCH BASIN TYPE 2, PER COB STD. DTL D-4
- EXISTING CATCH BASIN
- EXISTING MANHOLE
- EXISTING VALVE
- EXISTING ASSEMBLY LIGHT
- EXISTING TRAFFIC SIGNAL POLE
- EXISTING STORM DRAIN CULVERT
- EXISTING STORM DRAIN CATCH BASIN
- EXISTING STORM DRAIN MANHOLE
- EXISTING WATER METER
- EXISTING FIRE HYDRANT
- SD — PROPOSED STORM DRAIN
- W — PROPOSED WATER MAIN
- G — PROPOSED GAS
- OHE — PROPOSED OVERHEAD ELECTRIC
- UGE — PROPOSED UNDERGROUND ELECTRICAL
- UGT — PROPOSED UNDERGROUND TELEPHONE
- X — EXISTING FENCE
- G — EXISTING GAS
- SD — EXISTING STORM DRAIN
- OHE — EXISTING OVERHEAD ELECTRIC
- UGT — EXISTING UNDERGROUND TELEPHONE
- W — EXISTING WATERLINE

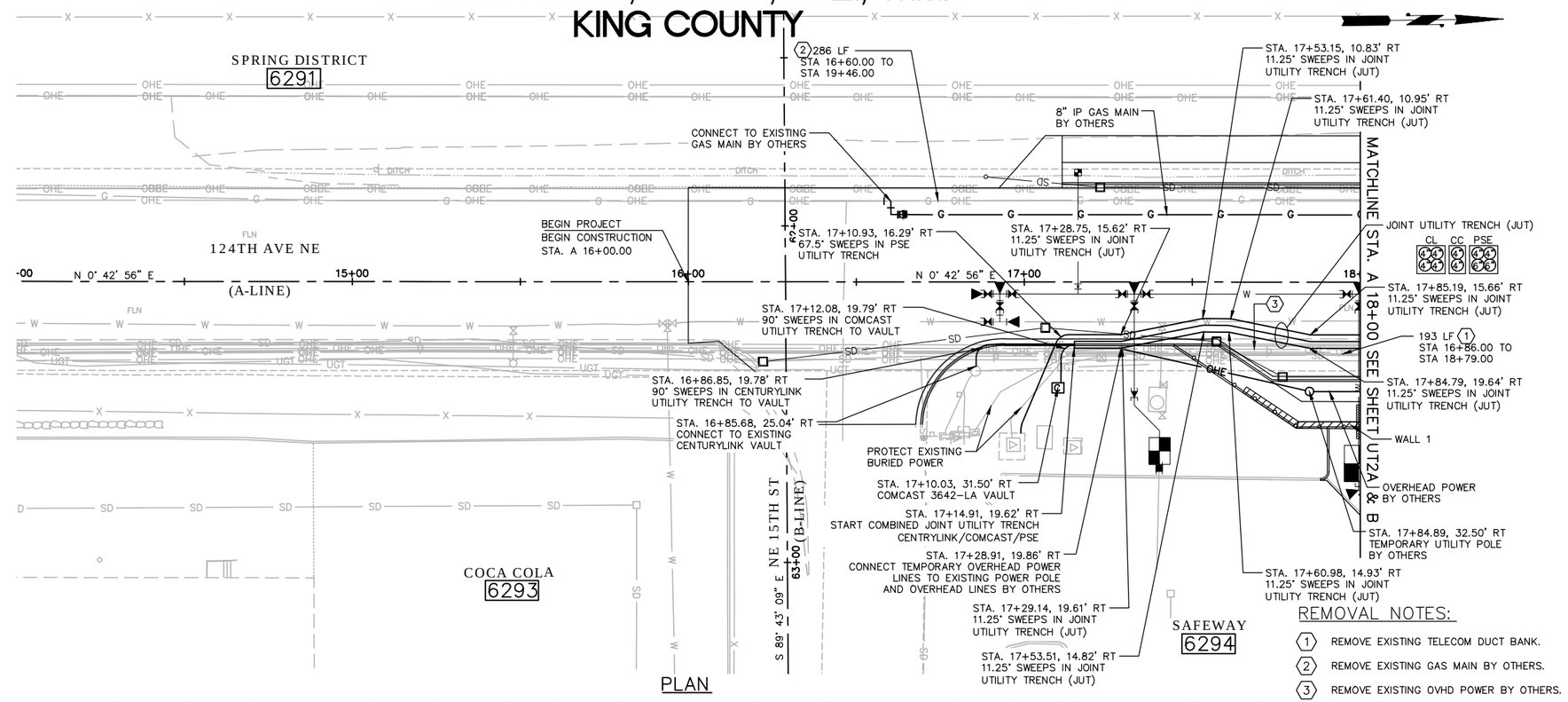

PLAN

REMOVAL NOTES:

1. REMOVE EXISTING TELECOM DUCT BANK.
2. REMOVE EXISTING GAS MAIN BY OTHERS.
3. REMOVE EXISTING OVHD POWER BY OTHERS.

CONSTRUCTION NOTES:

1. CONDUITS, VAULTS, AND POLES TO BE INSTALLED BY CONTRACTOR. CONDUCTORS AND WIRING WILL BE INSTALLED AND PULLED BY OTHERS.
2. STATIONS AND OFFSETS PROVIDED FOR VAULTS, SWEEPS/BENDS, AND POLES ALL REFERENCE TO THE CENTER OF THE APPURTENANCE LOCATION.
3. RELOCATED GAS MAIN AND SERVICES BY OTHERS.

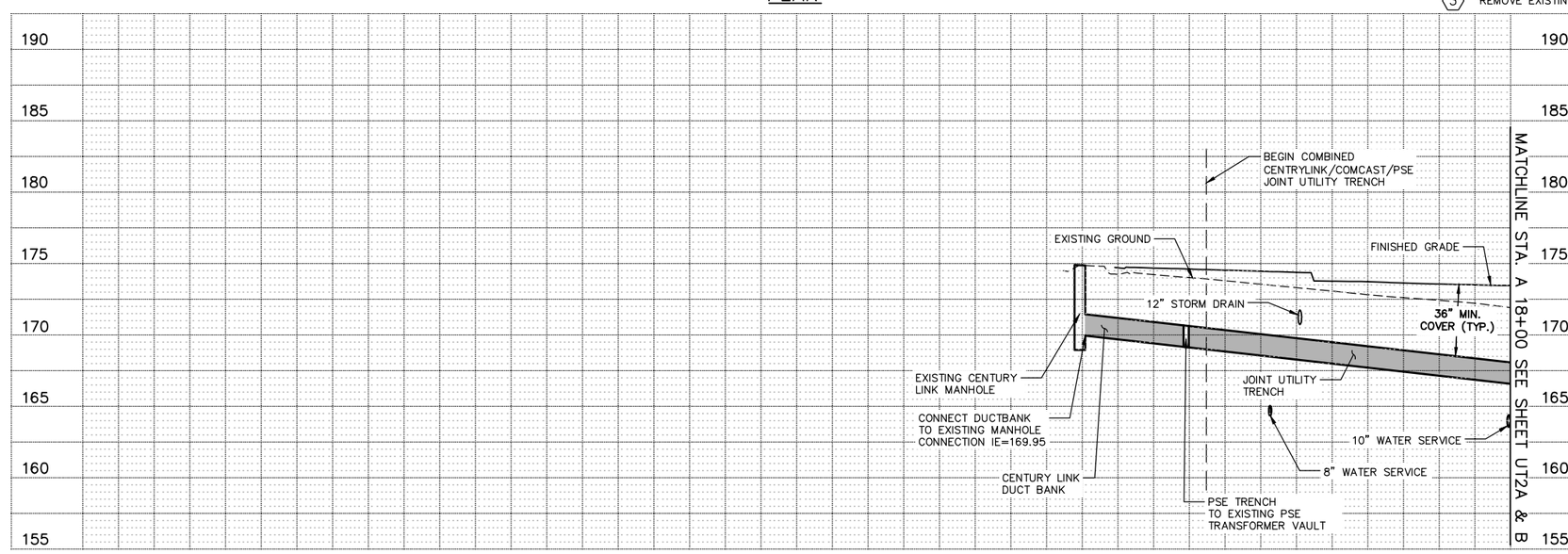

UNDERGROUND CENTURY LINK DUCT BANK PROFILE

KEY PLAN

20 0 20 40
HORIZONTAL SCALE IN FEET

5 0 5 10
VERTICAL SCALE IN FEET

NO.	DATE	BY	APPR.	REVISIONS

Approved By

TRANSPORTATION DESIGN MANAGER — DATE
M. ARAKELYAN
PROJECT MANAGER — DATE

M. AUSTIN — DESIGNED BY — DATE
J. FRYE — DRAWN BY — DATE
G. ROYCROFT — CHECKED BY — DATE

City of Bellevue
TRANSPORTATION DEPARTMENT

HDR

124th Ave NE - NE Spring Blvd to NE Ichigo Way

UTILITY PLAN & PROFILE BEGIN TO STA. A 18+00

SHEET NAME **UT1**

SHT 81 OF 198

SECTION 28, T. 25 N., R5E., W.M.
KING COUNTY

95% SUBMITTAL NOT FOR CONSTRUCTION

GENERAL NOTES:

1. UNLESS OTHERWISE NOTED, ALL DIMENSIONS ARE IN FEET.
2. THE CONTRACTOR SHALL POTHOLE ALL POTENTIAL CONFLICTS WITH UTILITIES TO VERIFY THE HORIZONTAL AND VERTICAL LOCATION OF THE EXISTING UTILITIES. WHERE THE VERTICAL DISTANCE BETWEEN UTILITIES IS LESS THAN 6 INCHES, THE CONTRACTOR SHALL PROVIDE AN O.D. X O.D. X 2.5 INCH ETHAFOAM PAD PER THE SPECIAL PROVISIONS 7-08.3(2). THE O.D. DIMENSION IS BASED ON "THE LARGEST DIAMETER PIPE IN THE CROSSING CONFLICT", FOR THAT PARTICULAR LOCATION.
3. CALL UTILITIES UNDERGROUND LOCATION CENTER AT 1-800-424-5555 48 HOURS PRIOR TO CONSTRUCTION.

LEGEND

- PROPOSED POWER VAULT
- PROPOSED POWER POLE
- PROPOSED TELEPHONE VAULT
- PROPOSED COMMUNICATION VAULT (COMCAST)
- PROPOSED GAS VALVE
- PROPOSED CATCH BASIN TYPE 1, PER COB STD. DTL D-2
- PROPOSED CATCH BASIN TYPE 2, PER COB STD. DTL D-4
- EXISTING CATCH BASIN
- EXISTING MANHOLE
- EXISTING VALVE
- EXISTING ASSEMBLY LIGHT
- EXISTING TRAFFIC SIGNAL POLE
- EXISTING STORM DRAIN CULVERT
- EXISTING STORM DRAIN CATCH BASIN
- EXISTING STORM DRAIN MANHOLE
- EXISTING WATER METER
- EXISTING FIRE HYDRANT
- SD — PROPOSED STORM DRAIN
- W — PROPOSED WATER MAIN
- G — PROPOSED GAS
- OHE — PROPOSED OVERHEAD ELECTRIC
- UGE — PROPOSED UNDERGROUND ELECTRICAL
- UGT — PROPOSED UNDERGROUND TELEPHONE
- X — EXISTING FENCE
- G — EXISTING GAS
- SD — EXISTING STORM DRAIN
- OHE — EXISTING OVERHEAD ELECTRIC
- UGT — EXISTING UNDERGROUND TELEPHONE
- W — EXISTING WATERLINE

CONSTRUCTION NOTES:

1. CONDUITS, VAULTS, AND POLES TO BE INSTALLED BY CONTRACTOR. CONDUCTORS AND WIRING WILL BE INSTALLED AND PULLED BY OTHERS.
2. STATIONS AND OFFSETS PROVIDED FOR VAULTS, SWEEPS/BENDS, AND POLES ALL REFERENCE TO THE CENTER OF THE APPURTENANCE LOCATION.
3. RELOCATED GAS MAIN AND SERVICES BY OTHERS.

UTILITY POTHOLE INFORMATION:

PH1	8" GAS	GE=168.27,	TOP OF PIPE=164.1
PH2	1" POLYMER UNKNOWN,	GE=168.36,	TOP OF PIPE=165.8
PH3	10" DI WATER,	GE=168.06,	TOP OF PIPE=163.9
PH4	10" DI WATER,	GE=162.53,	TOP OF PIPE=158.2
PH5	5" COMM CONDUIT,	GE=162.31,	TOP OF CONDUIT=159.7

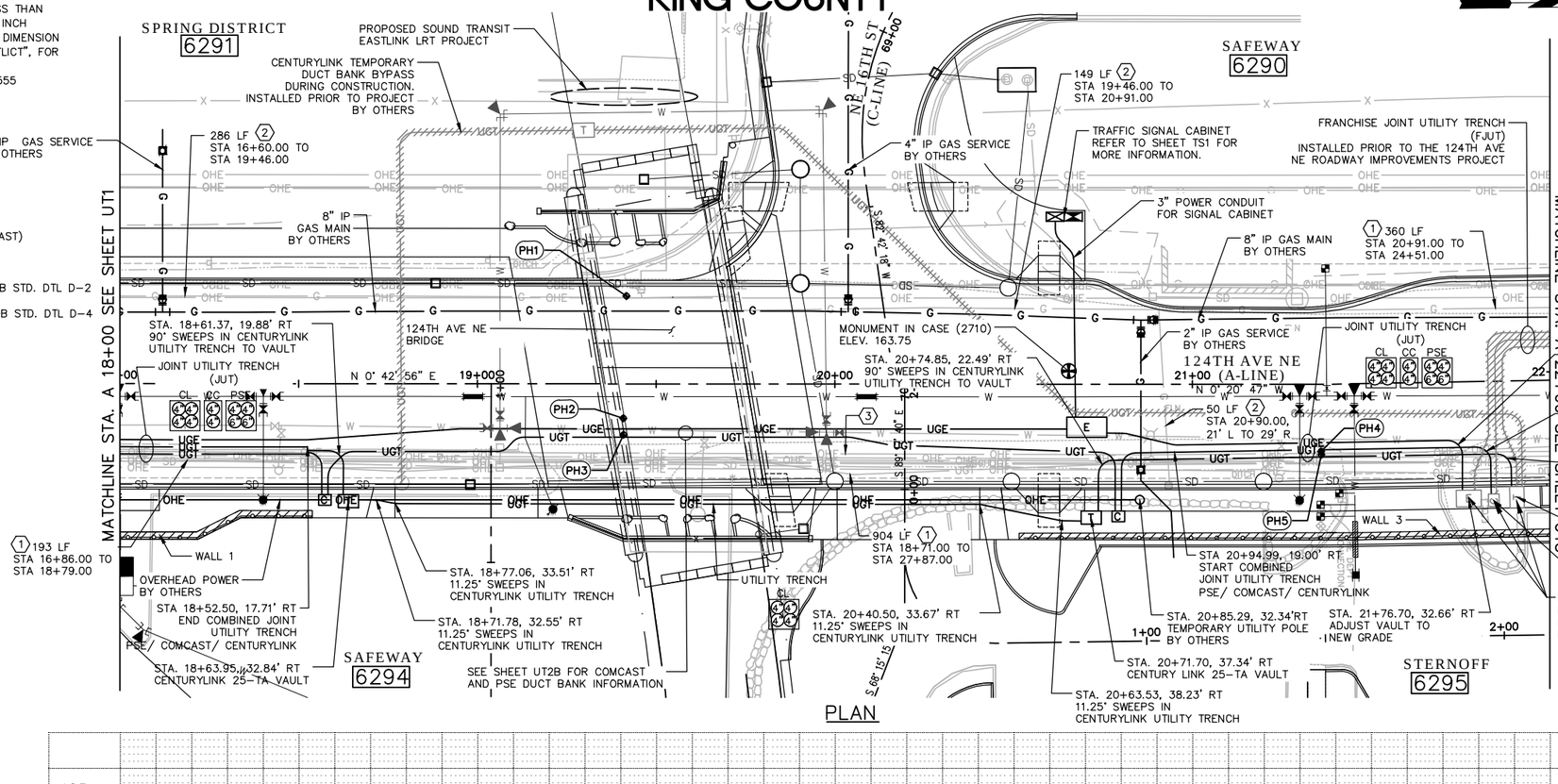

PLAN

REMOVAL NOTES:

(1) REMOVE EXISTING TELECOM DUCT BANK.
(2) REMOVE EXISTING GAS MAIN BY OTHERS.
(3) REMOVE EXISTING OVHD POWER BY OTHERS.

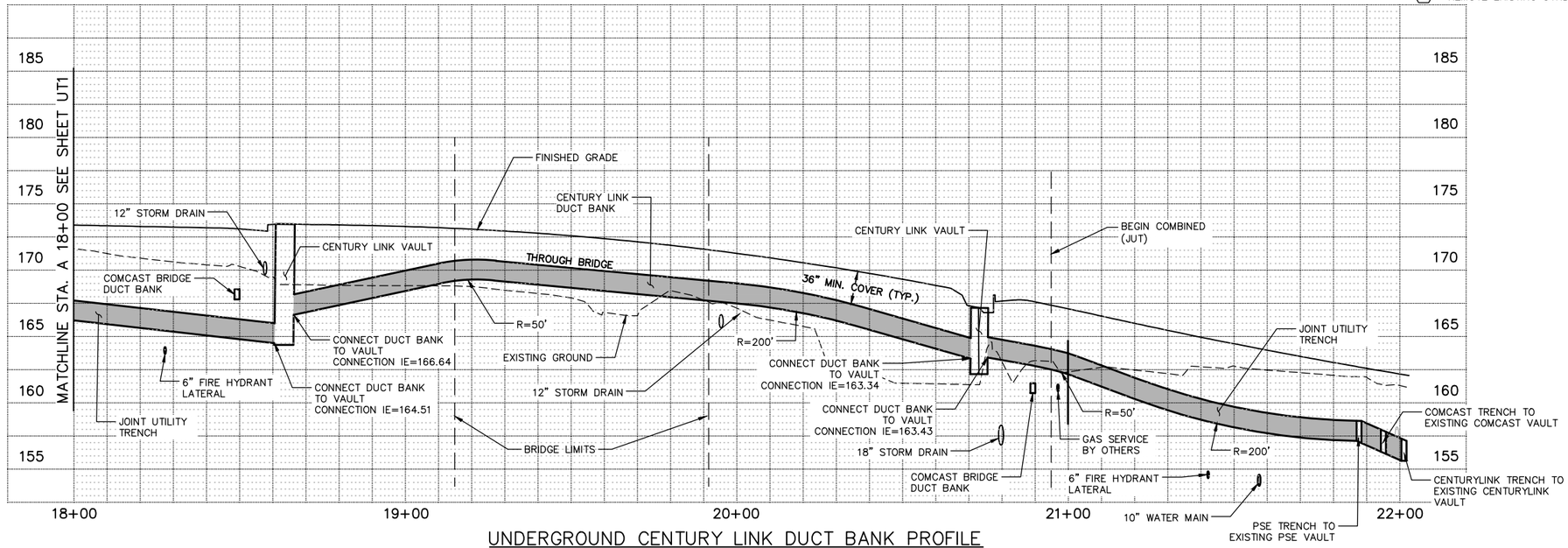

UNDERGROUND CENTURY LINK DUCT BANK PROFILE

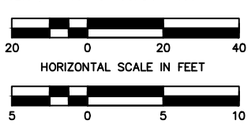

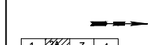

KEY PLAN

NO.	DATE	BY	APPR.	REVISIONS

Approved By

TRANSPORTATION DESIGN MANAGER — DATE
M. ARAKELYAN
PROJECT MANAGER — DATE

M. AUSTIN — DESIGNED BY — DATE
J. FRYE — DRAWN BY — DATE
G. ROYCROFT — CHECKED BY — DATE

City of Bellevue
TRANSPORTATION DEPARTMENT

HDR

124th Ave NE - NE Spring Blvd to NE Ichigo Way

UTILITY PLAN & PROFILE
STA. A 18+00 TO STA. A 22+00

SHEET NAME **UT2A**

SECTION 28, T. 25 N., R5E., W.M.
KING COUNTY

95% SUBMITTAL NOT FOR CONSTRUCTION

GENERAL NOTES:

1. UNLESS OTHERWISE NOTED, ALL DIMENSIONS ARE IN FEET.
2. THE CONTRACTOR SHALL POTHOLE ALL POTENTIAL CONFLICTS WITH UTILITIES TO VERIFY THE HORIZONTAL AND VERTICAL LOCATION OF THE EXISTING UTILITIES. WHERE THE VERTICAL DISTANCE BETWEEN UTILITIES IS LESS THAN 6 INCHES, THE CONTRACTOR SHALL PROVIDE AN O.D. X O.D. X 2.5 INCH ETHAFOAM PAD PER THE SPECIAL PROVISIONS 7-08.3(2). THE O.D. DIMENSION IS BASED ON "THE LARGEST DIAMETER PIPE IN THE CROSSING CONFLICT", FOR THAT PARTICULAR LOCATION.
3. CALL UTILITIES UNDERGROUND LOCATION CENTER AT 1-800-424-5555 48 HOURS PRIOR TO CONSTRUCTION.

LEGEND

- PROPOSED POWER VAULT
- PROPOSED POWER POLE
- PROPOSED TELEPHONE VAULT
- PROPOSED COMMUNICATION VAULT (COMCAST)
- PROPOSED GAS VALVE
- PROPOSED CATCH BASIN TYPE 1, PER COB STD. DTL D-2
- PROPOSED CATCH BASIN TYPE 2, PER COB STD. DTL D-4
- SD — PROPOSED STORM DRAIN
- W — PROPOSED WATER MAIN
- G — PROPOSED GAS
- OHE — PROPOSED OVERHEAD ELECTRIC
- UGE — PROPOSED UNDERGROUND ELECTRICAL
- UGT — PROPOSED UNDERGROUND TELEPHONE
- X — EXISTING FENCE
- G — EXISTING GAS
- SD — EXISTING STORM DRAIN
- OHE — EXISTING OVERHEAD ELECTRIC
- UGT — EXISTING UNDERGROUND TELEPHONE
- W — EXISTING WATERLINE
- EXISTING CATCH BASIN
- EXISTING MANHOLE
- EXISTING VALVE
- EXISTING ASSEMBLY LIGHT
- EXISTING TRAFFIC SIGNAL POLE
- EXISTING STORM DRAIN CULVERT
- EXISTING STORM DRAIN CATCH BASIN
- EXISTING STORM DRAIN MANHOLE
- EXISTING WATER METER
- EXISTING FIRE HYDRANT

UTILITY POTHOLE INFORMATION:

PH1	8" GAS	GE=168.27,	TOP OF PIPE=164.1
PH2	1" POLYMER UNKNOWN,	GE=168.36,	TOP OF PIPE=165.8
PH3	10" DI WATER,	GE=168.06,	TOP OF PIPE=163.9
PH4	10" DI WATER,	GE=162.53,	TOP OF PIPE=158.2
PH5	5" COMM CONDUIT,	GE=162.31,	TOP OF CONDUIT=159.7

CONSTRUCTION NOTES:

1. CONDUITS, VAULTS, AND POLES TO BE INSTALLED BY CONTRACTOR. CONDUCTORS AND WIRING WILL BE INSTALLED AND PULLED BY OTHERS.
2. STATIONS AND OFFSETS PROVIDED FOR VAULTS, SWEEPS/BENDS, AND POLES ALL REFERENCE TO THE CENTER OF THE APPURTENANCE LOCATION.
3. RELOCATED GAS MAIN AND SERVICES BY OTHERS.

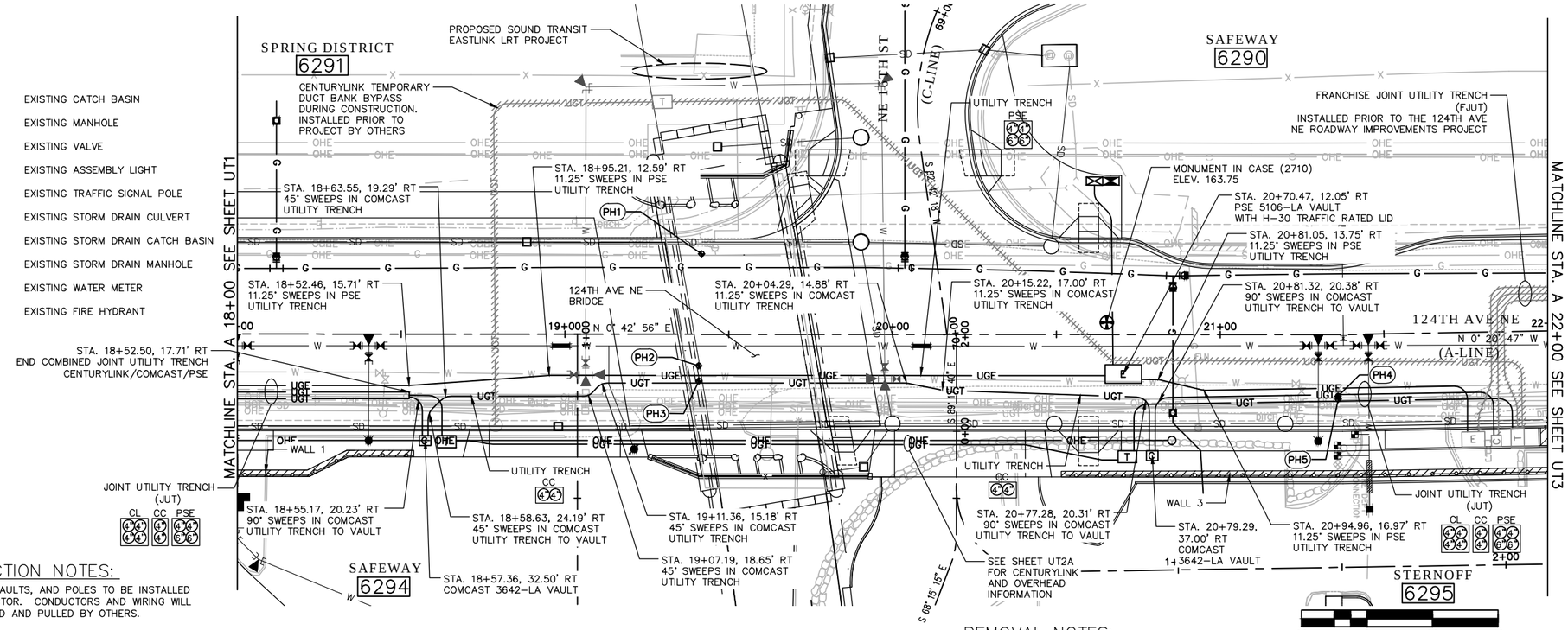

PLAN

REMOVAL NOTES:

SEE SHEET UT2A FOR ALL EXISTING UTILITY REMOVAL INFORMATION.

HORIZONTAL SCALE IN FEET: 20 0 20 40

VERTICAL SCALE IN FEET: 5 0 5 10

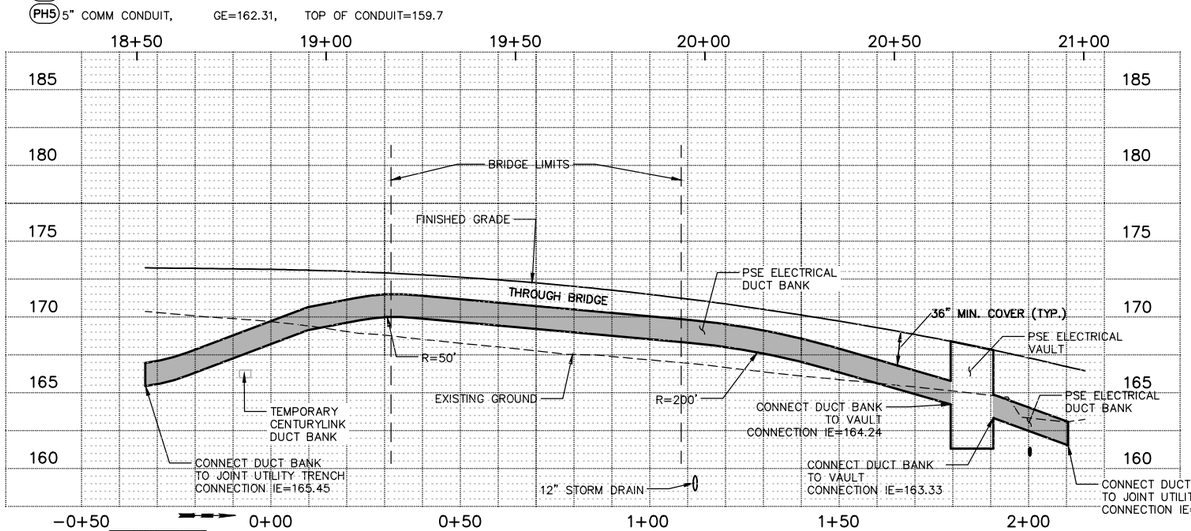

UNDERGROUND ELECTRIC (BRIDGE) PROFILE

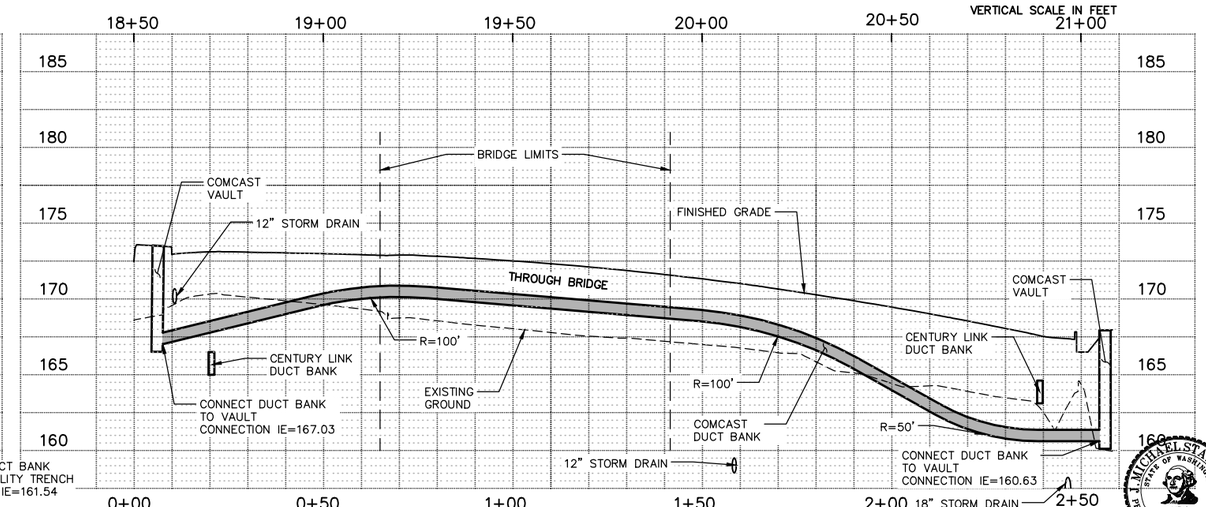

UNDERGROUND COMCAST FUTURE (BRIDGE) PROFILE

KEY PLAN

NO.	DATE	BY	APPR.	REVISIONS

Approved By

TRANSPORTATION DESIGN MANAGER — DATE
M. ARAKELYAN
PROJECT MANAGER — DATE

M. AUSTIN — DESIGNED BY — DATE
J. FRYE — DRAWN BY — DATE
G. ROYCROFT — CHECKED BY — DATE

City of Bellevue
TRANSPORTATION DEPARTMENT

124th Ave NE - NE Spring Blvd to NE Ichigo Way

UTILITY PLAN & PROFILE
STA. A 18+00 TO STA. A 22+00

SHEET NAME UT2B

SHT 83 OF 198

SECTION 28, T. 25 N., R5E., W.M.
KING COUNTY

95% SUBMITTAL NOT FOR CONSTRUCTION

GENERAL NOTES:

1. UNLESS OTHERWISE NOTED, ALL DIMENSIONS ARE IN FEET.
2. THE CONTRACTOR SHALL POTHOLE ALL POTENTIAL CONFLICTS WITH UTILITIES TO VERIFY THE HORIZONTAL AND VERTICAL LOCATION OF THE EXISTING UTILITIES. WHERE THE VERTICAL DISTANCE BETWEEN UTILITIES IS LESS THAN 6 INCHES, THE CONTRACTOR SHALL PROVIDE AN O.D. X O.D. X 2.5 INCH ETHAFOAM PAD PER THE SPECIAL PROVISIONS 7-08.3(2). THE O.D. DIMENSION IS BASED ON "THE LARGEST DIAMETER PIPE IN THE CROSSING CONFLICT", FOR THAT PARTICULAR LOCATION.
3. CALL UTILITIES UNDERGROUND LOCATION CENTER AT 1-800-424-5555 48 HOURS PRIOR TO CONSTRUCTION.
4. THE JOINT UTILITY TRENCH (JUT) ACROSS 124TH AVE NE AND NORTH ALONG 124TH AVE NE FROM STA 21+80 UP TO STA 29+15 WILL BE INSTALLED BY THE FRANCHISE UTILITIES IN ADVANCE OF THE PROJECT. THE WORK TO BE PERFORMED FOR THE JUT BY THE CITY CONTRACTOR AS PART OF THE ROAD CONSTRUCTION WILL INCLUDE TRENCHING, GRAVEL BACKFILL, COMPACTION AND PAVING. THE LIMITS OF THIS WORK WILL EXTEND FROM STA 16+80 TO STA 21+80 AS SHOWN ON THESE PLANS.

LEGEND

- PROPOSED POWER VAULT
- PROPOSED POWER POLE
- PROPOSED TELEPHONE VAULT
- PROPOSED COMMUNICATION VAULT (COMCAST)
- PROPOSED GAS VALVE
- PROPOSED CATCH BASIN TYPE 1, PER COB STD. DTL D-2
- PROPOSED CATCH BASIN TYPE 2, PER COB STD. DTL D-4
- EXISTING CATCH BASIN
- EXISTING MANHOLE
- EXISTING VALVE
- EXISTING ASSEMBLY LIGHT
- EXISTING TRAFFIC SIGNAL POLE
- EXISTING STORM DRAIN CULVERT
- EXISTING STORM DRAIN CATCH BASIN
- EXISTING STORM DRAIN MANHOLE
- EXISTING WATER METER
- EXISTING FIRE HYDRANT
- SD — PROPOSED STORM DRAIN
- G — PROPOSED GAS
- OHE — PROPOSED OVERHEAD ELECTRIC
- UGE — PROPOSED UNDERGROUND ELECTRIC
- UGT — PROPOSED UNDERGROUND TELEPHONE
- X — EXISTING FENCE
- G — EXISTING GAS
- SD — EXISTING STORM DRAIN
- OHT — EXISTING OVERHEAD TELEPHONE
- OHE — EXISTING OVERHEAD ELECTRIC
- UGT — EXISTING UNDERGROUND TELEPHONE

CONSTRUCTION NOTES:

1. CONDUITS, VAULTS, AND POLES TO BE INSTALLED BY CONTRACTOR. CONDUCTORS AND WIRING WILL BE INSTALLED AND PULLED BY OTHERS.
2. STATIONS AND OFFSETS PROVIDED FOR VAULTS, SWEEPS/BENDS, AND POLES ALL REFERENCE TO THE CENTER OF THE APPURTENANCE LOCATION.
3. RELOCATED GAS MAIN AND SERVICES BY OTHERS.

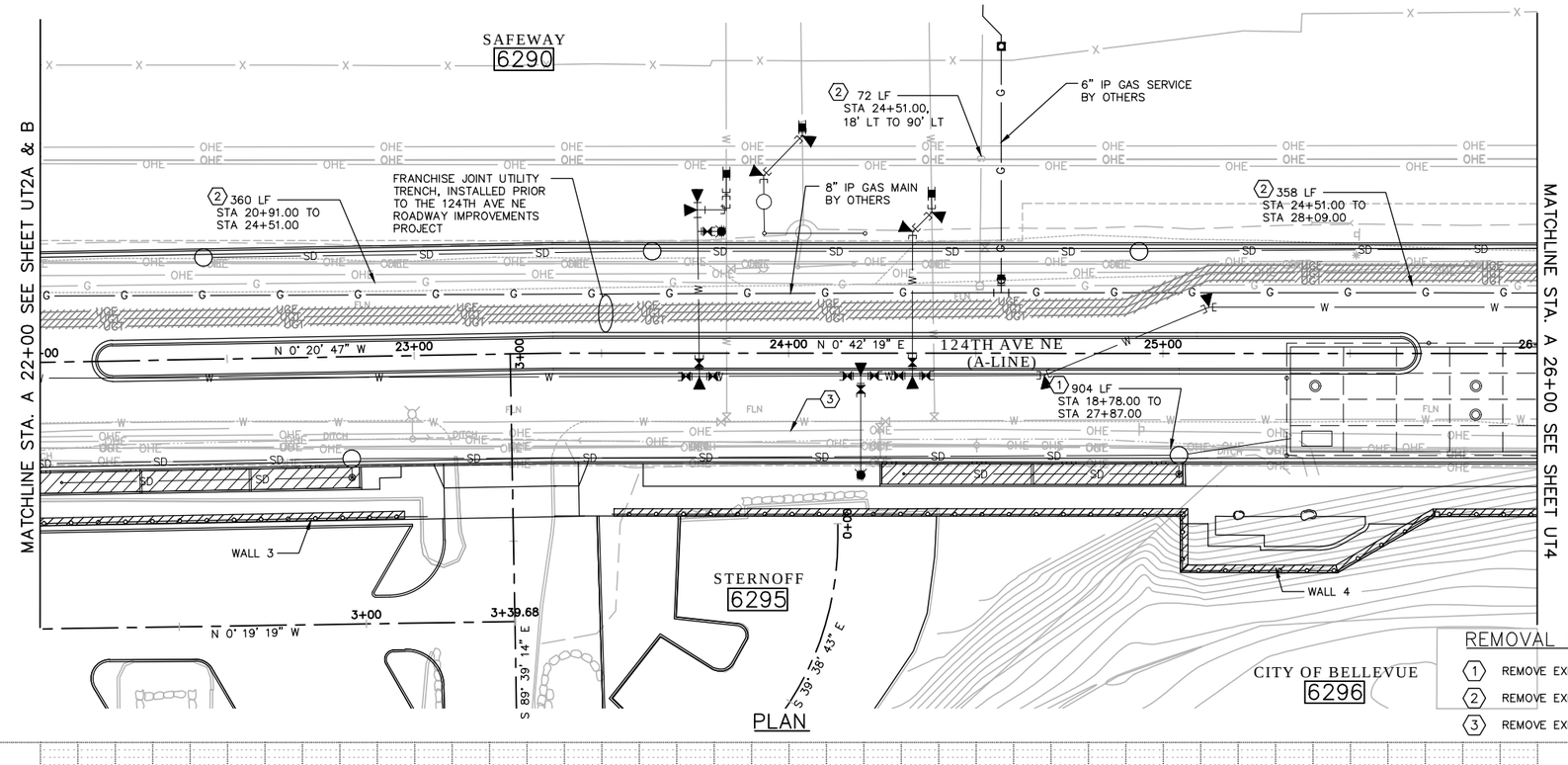

PLAN

REMOVAL NOTES:

1. REMOVE EXISTING TELECOM DUCT BANK.
2. REMOVE EXISTING GAS MAIN BY OTHERS.
3. REMOVE EXISTING OVHD POWER BY OTHERS.

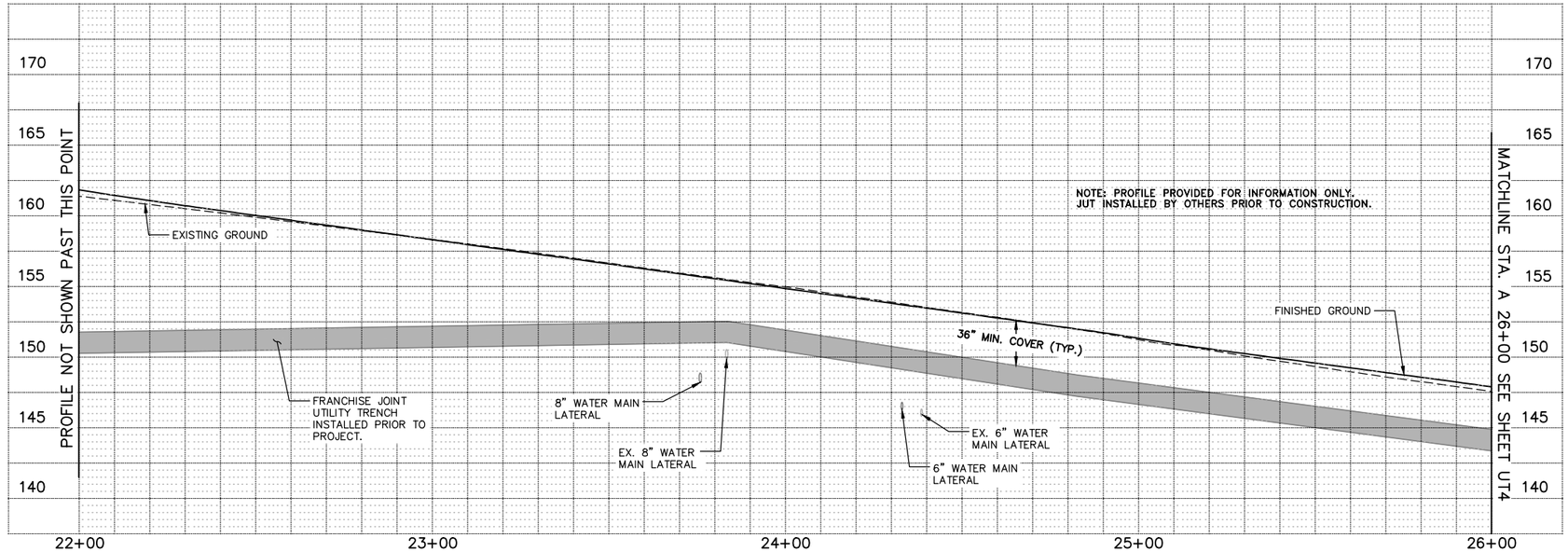

FRANCHISE JOINT UTILITY TRENCH PROFILE

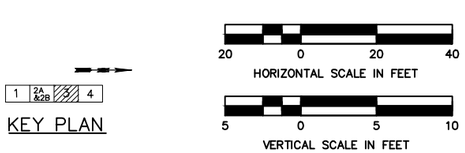

KEY PLAN

NO.	DATE	BY	APPR.	REVISIONS

Approved By

TRANSPORTATION DESIGN MANAGER — DATE
M. ARAKELYAN
PROJECT MANAGER — DATE

M. AUSTIN
DESIGNED BY — DATE
J. FRYE
DRAWN BY — DATE
G. ROYCROFT
CHECKED BY — DATE

City of Bellevue
TRANSPORTATION DEPARTMENT

HDR

124th Ave NE - NE Spring Blvd to NE Ichigo Way

UTILITY PLAN & PROFILE
STA. A 22+00 TO STA. A 26+00

SHEET NAME **UT3**

SHT 84 OF 198

SECTION 28, T. 25 N., R5E., W.M.
KING COUNTY

95% SUBMITTAL NOT FOR CONSTRUCTION

GENERAL NOTES:

1. UNLESS OTHERWISE NOTED, ALL DIMENSIONS ARE IN FEET.
2. THE CONTRACTOR SHALL POTHOLE ALL POTENTIAL CONFLICTS WITH UTILITIES TO VERIFY THE HORIZONTAL AND VERTICAL LOCATION OF THE EXISTING UTILITIES. WHERE THE VERTICAL DISTANCE BETWEEN UTILITIES IS LESS THAN 6 INCHES, THE CONTRACTOR SHALL PROVIDE AN O.D. X O.D. X 2.5 INCH ETHAFOAM PAD PER THE SPECIAL PROVISIONS 7-08.3(2). THE O.D. DIMENSION IS BASED ON "THE LARGEST DIAMETER PIPE IN THE CROSSING CONFLICT", FOR THAT PARTICULAR LOCATION.
3. CALL UTILITIES UNDERGROUND LOCATION CENTER AT 1-800-424-5555 48 HOURS PRIOR TO CONSTRUCTION.
4. THE JOINT UTILITY TRENCH (JUT) ACROSS 124TH AVE NE AND NORTH ALONG 124TH AVE NE FROM STA 21+80 UP TO STA 29+15 WILL BE INSTALLED BY THE FRANCHISE UTILITIES IN ADVANCE OF THE PROJECT. THE WORK TO BE PERFORMED FOR THE JUT BY THE CITY CONTRACTOR AS PART OF THE ROAD CONSTRUCTION WILL INCLUDE TRENCHING, GRAVEL BACKFILL, COMPACTION AND PAVING. THE LIMITS OF THIS WORK WILL EXTEND FROM STA 16+80 TO STA 21+80 AS SHOWN ON THESE PLANS.

LEGEND

E	PROPOSED POWER VAULT
	PROPOSED POWER POLE
C	PROPOSED COMMUNICATION VAULT (COMCAST)
	PROPOSED GAS VALVE
	PROPOSED CATCH BASIN TYPE 1, PER COB STD. DTL D-2
	PROPOSED CATCH BASIN TYPE 2, PER COB STD. DTL D-4
	EXISTING CATCH BASIN
	EXISTING MANHOLE
	EXISTING VALVE
	EXISTING ASSEMBLY LIGHT
	EXISTING TRAFFIC SIGNAL POLE
	EXISTING STORM DRAIN CULVERT
	EXISTING STORM DRAIN CATCH BASIN
	EXISTING STORM DRAIN MANHOLE
	EXISTING WATER METER
	EXISTING FIRE HYDRANT
SD	PROPOSED STORM DRAIN
G	PROPOSED GAS
OHE	PROPOSED OVERHEAD ELECTRIC
UGE	PROPOSED UNDERGROUND ELECTRIC
UGT	PROPOSED UNDERGROUND TELEPHONE
X	EXISTING FENCE
G	EXISTING GAS
SD	EXISTING STORM DRAIN
W	EXISTING WATER LINE
OHTV	EXISTING OVERHEAD TELEVISION
OHE	EXISTING OVERHEAD ELECTRIC
UGT	EXISTING UNDERGROUND TELEPHONE

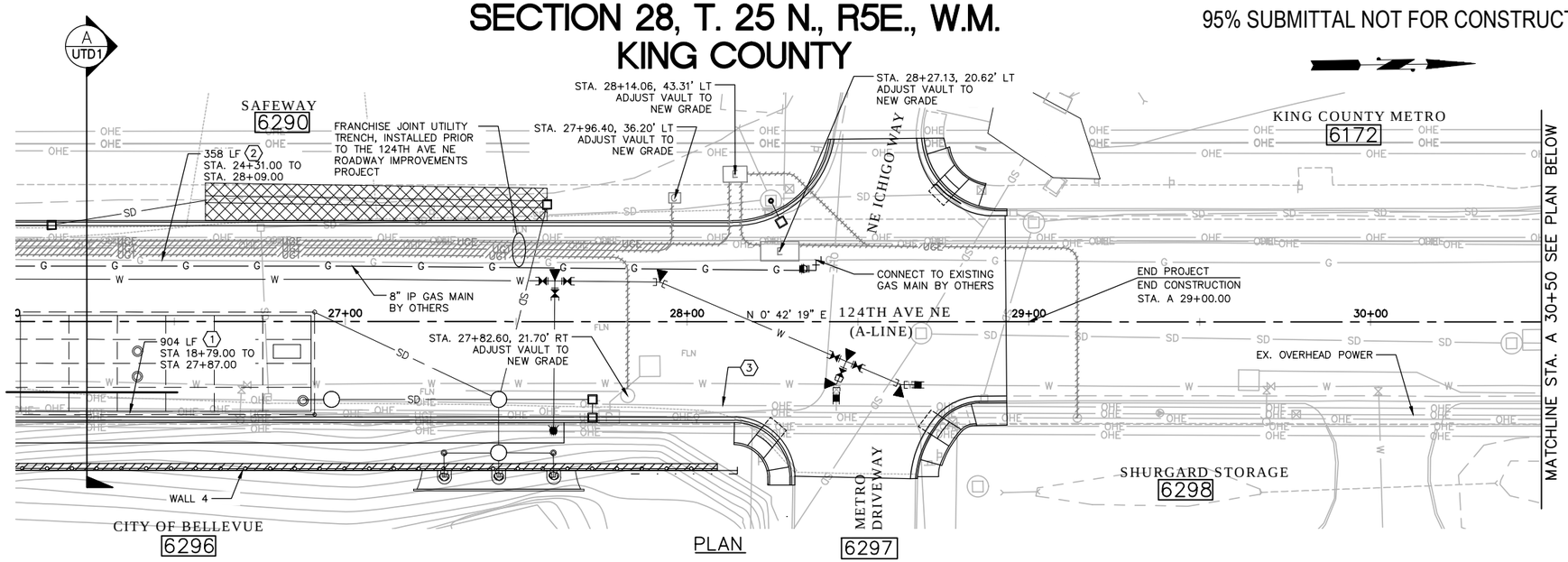

PLAN

REMOVAL NOTES:

1. REMOVE EXISTING TELECOM DUCT BANK.
2. REMOVE EXISTING GAS MAIN BY OTHERS.
3. REMOVE EXISTING OVHD POWER BY OTHERS.

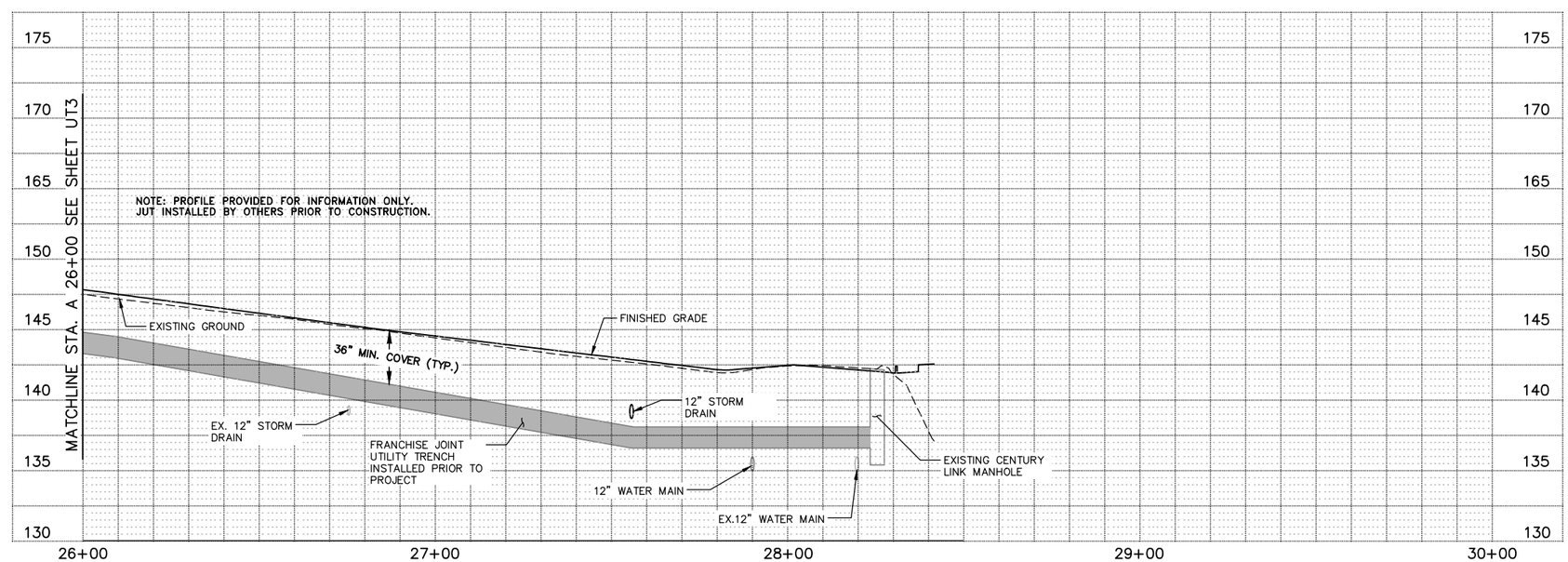

FRANCHISE JOINT UTILITY TRENCH PROFILE

CONSTRUCTION NOTES:

1. CONDUITS, VAULTS, AND POLES TO BE INSTALLED BY CONTRACTOR. CONDUCTORS AND WIRING WILL BE INSTALLED AND PULLED BY OTHERS.
2. STATIONS AND OFFSETS PROVIDED FOR VAULTS, SWEEPS/BENDS, AND POLES ALL REFERENCE TO THE CENTER OF THE APPURTENANCE LOCATION.
3. RELOCATED GAS MAIN AND SERVICES BY OTHERS.

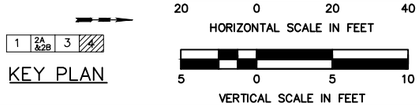

KEY PLAN

NO.	DATE	BY	APPR.	REVISIONS

Approved By

TRANSPORTATION DESIGN MANAGER — DATE
M. ARAKELYAN
PROJECT MANAGER — DATE

M. AUSTIN
DESIGNED BY — DATE
J. FRYE
DRAWN BY — DATE
G. ROYCROFT
CHECKED BY — DATE

City of Bellevue
TRANSPORTATION DEPARTMENT

HDR

124th Ave NE - NE Spring Blvd to NE Ichigo Way

UTILITY PLAN & PROFILE
STA. A 26+00 TO STA. A 30+00

SHEET NAME UT4

SHT 85 OF 198

95% SUBMITTAL NOT FOR CONSTRUCTION

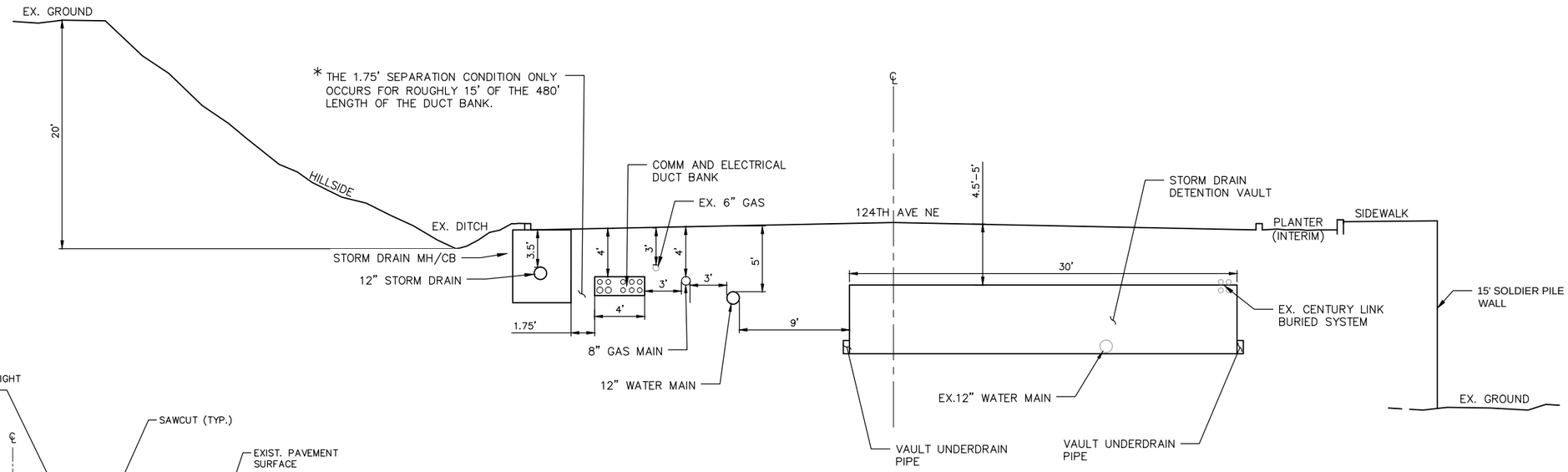

124TH AVE NE – UTILITY CROSS SECTION AT VAULT (A)
N.T.S.

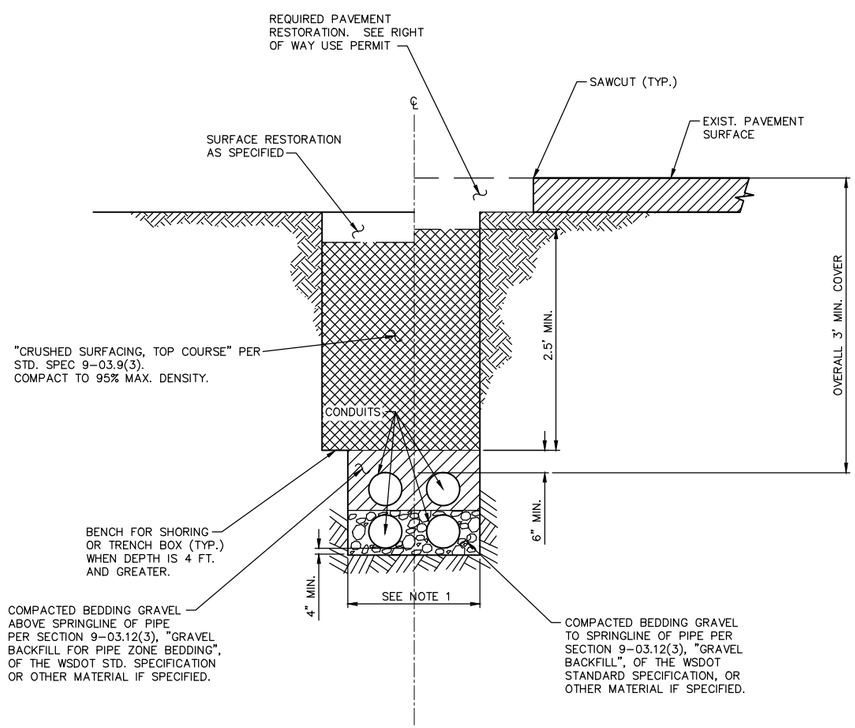

PAVED AREAS

NOTES:

1. MAXIMUM WIDTH OF TRENCH AT TOP OF PIPE:
   * 36" FOR PIPE UP TO AND INCLUDING 12" NOMINAL DIAMETER.
   * I.D. PLUS 18" FOR PIPE LARGER THAN 12" NOMINAL DIAMETER.
2. EXCAVATIONS SHALL COMPLY WITH THE SAFETY STANDARDS DESCRIBED IN CHAPTER 296-155, PART N OF THE WAC.
3. SEE "BEDDING, BACKFILL AND COMPACTION" IN CHAPTER W5 OF THE ENGINEERING STANDARDS FOR ADDITIONAL CONSTRUCTION REQUIREMENTS.

TYPICAL TRENCH DETAIL
NTS

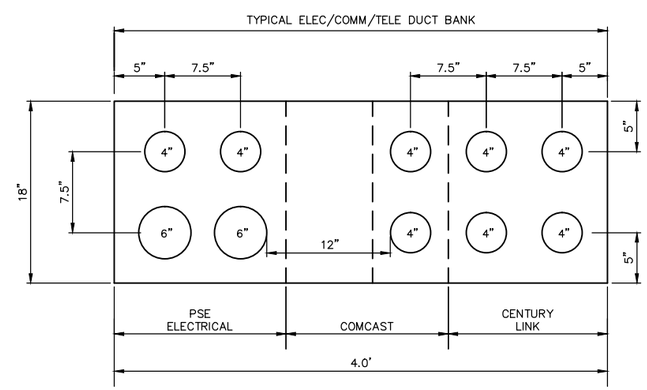

NEW DUCT BANK CONDUIT CONFIGURATION & SPACING DETAIL (B)
N.T.S.

NO.	DATE	BY	APPR.	REVISIONS

Approved By

TRANSPORTATION DESIGN MANAGER — DATE
M. ARAKELYAN
PROJECT MANAGER — DATE

M. AUSTIN — DESIGNED BY — DATE
J. FRYE — DRAWN BY — DATE
G. ROYCROFT — CHECKED BY — DATE

City of Bellevue
TRANSPORTATION DEPARTMENT

HDR

124th Ave NE - NE Spring Blvd to NE Ichigo Way

UTILITY DETAILS

SHEET NAME UTD1

SHT 86 OF 198

SECTION 28, T. 25 N., R5E., W.M.
KING COUNTY

95% SUBMITTAL NOT FOR CONSTRUCTION

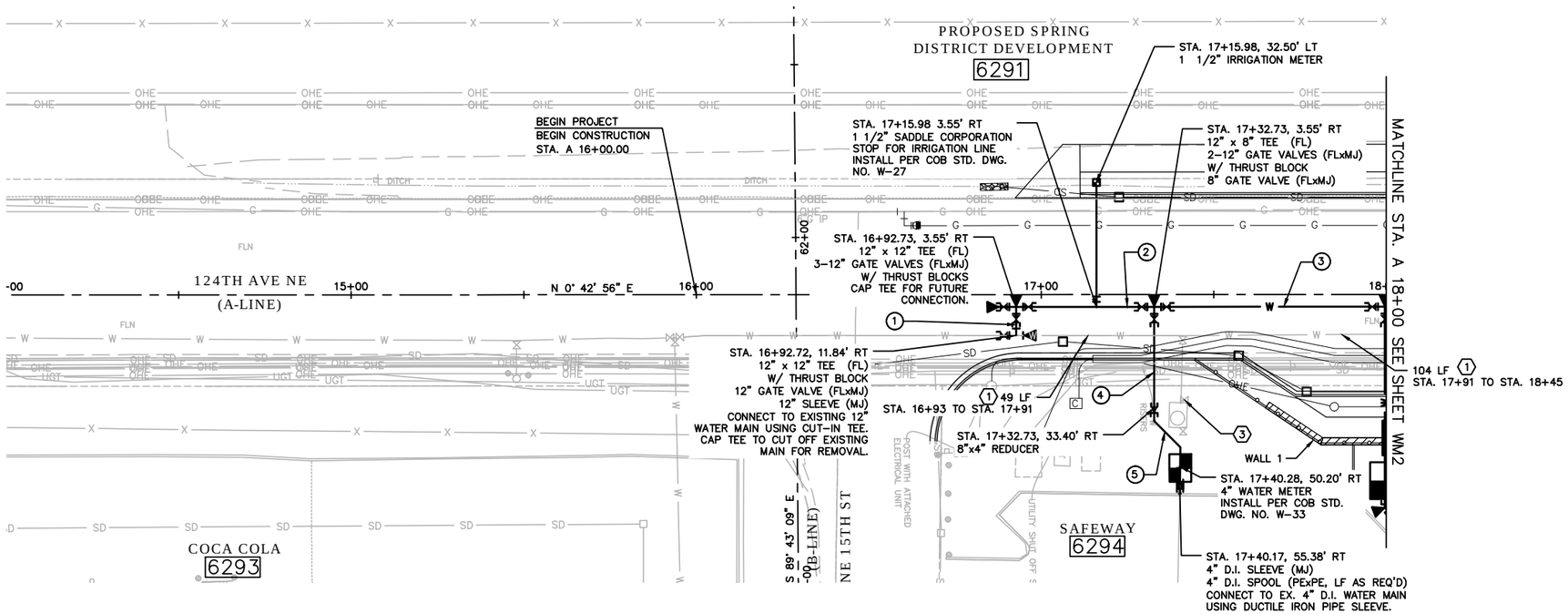

PLAN

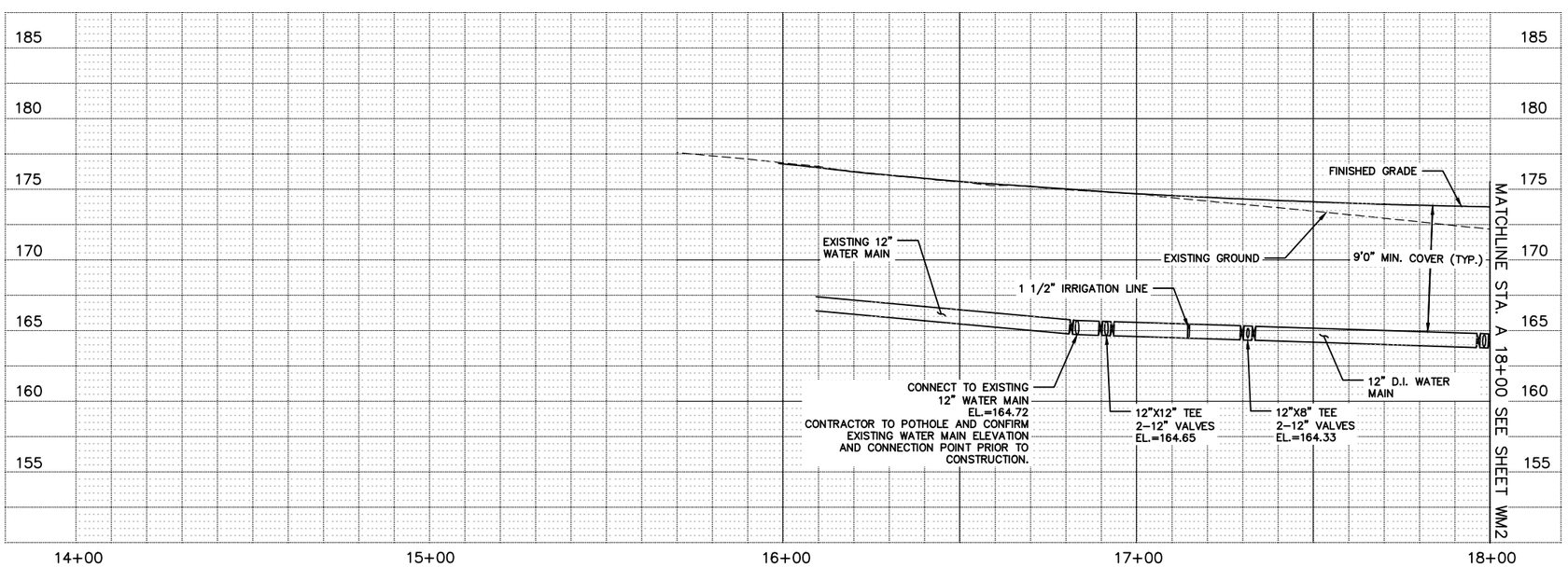

124TH AVE NE WATER MAIN PROFILE

GENERAL NOTES:

1. UNLESS OTHERWISE NOTED, ALL DIMENSIONS ARE IN FEET.
2. THE CONTRACTOR SHALL POTHOLE ALL POTENTIAL CONFLICTS WITH UTILITIES TO VERIFY THE HORIZONTAL AND VERTICAL LOCATION OF THE EXISTING UTILITIES. WHERE THE VERTICAL DISTANCE BETWEEN UTILITIES IS LESS THAN 6 INCHES, THE CONTRACTOR SHALL PROVIDE AN O.D. X O.D. X 2.5 INCH ETHAFOAM PAD PER THE SPECIAL PROVISIONS 7-08.3(2). THE O.D. DIMENSIO IS BASED ON "THE LARGEST DIAMETER PIPE IN THE CROSSING CONFLICT", FOR THAT PARTICULAR LOCATION.
3. CALL UTILITIES UNDERGROUND LOCATION CENTER AT 1-800-424-5555 48 HOURS PRIOR TO CONSTRUCTION.
4. ALL WM PIPE SHALL BE DUCTILE IRON PIPE, CLASS 52.
5. STATIONS AND OFFSETS PROVIDED FOR TEES, BENDS, AND METERS ALL REFERENCE TO THE CENTER OF THE APPURTENANCE LOCATION.
6. THE CONTRACTOR SHALL SUBMIT A WATER MAIN LAY PLAN FOR ALL WATER MAIN SERVICE LATERALS LARGER THAN 2 INCHES IN SIZE TO THE ENGINEER AT LEAST 20 WORKING DAYS PRIOR TO PIPE INSTALLATION. THIS WORK SHALL INCLUDE ALL EQUIPMENT NECESSARY TO COMPLETE THE WORK.

LEGEND

	WATERMETER AND VAULT
	AIR & VACUUM RELEASE VALVE ASSY
	TEE & GATE VALVE
	FIRE HYDRANT
	FLEXIBLE EXPANSION JOINT
	REDUCER
	THRUST BLOCK
	PROPOSED CATCH BASIN TYPE 1
	PROPOSED CATCH BASIN TYPE 2
W	PROPOSED WATERMAIN
G	PROPOSED GAS
SD	PROPOSED STORM DRAIN
UGE	PROPOSED UNDERGROUND ELECTRICAL
UGT	PROPOSED TELECOM
X	EXISTING FENCE
G	EXISTING GAS
FO	EXISTING FIBER OPTIC
SD	EXISTING STORM DRAIN
SS	EXISTING SANITARY SEWER
W	EXISTING WATER LINE
OHT	EXISTING OVERHEAD TELEPHONE
OHTV	EXISTING OVERHEAD TELEVISION
OHE	EXISTING OVERHEAD ELECTRIC
UGT	EXISTING UNDERGROUND TELEPHONE
UGE	EXISTING UNDERGROUND ELECTRIC

CONSTRUCTION NOTES:

1. 8.3 LF OF 12" D.I.
2. 40.0 LF OF 12" D.I.
3. 66.8 LF OF 12" D.I.
4. 29.8 LF OF 8" D.I.
5. 25.2 LF OF 4" D.I.

REMOVAL NOTES:

1. REMOVE EXISTING 12" WM PIPE.
3. REMOVE EXISTING WATER SERVICE AND METER VAULT.

20 10 0 20 40
HORIZONTAL SCALE

5 2.5 0 5 10
VERTICAL SCALE

2 3 4
KEY PLAN

MICHAEL STARLING — STATE OF WASHINGTON — 44740 — REGISTERED PROFESSIONAL ENGINEER

NO.	DATE	BY	APPR.	REVISIONS

Approved By

TRANSPORTATION DESIGN MANAGER — DATE
M. ARAKELYAN
PROJECT MANAGER — DATE

M. AUSTIN — DESIGNED BY — DATE
J. FRYE — DRAWN BY — DATE
G. ROYCROFT — CHECKED BY — DATE

City of Bellevue
TRANSPORTATION DEPARTMENT

HDR

124th Ave NE - NE Spring Blvd to NE Ichigo Way

WATER MAIN PLAN & PROFILE
STA. A 14+00 TO STA. A 18+00

SHEET NAME **WM1**

SHT 87 OF 198

SECTION 28, T. 25 N., R5E., W.M.
KING COUNTY

95% SUBMITTAL NOT FOR CONSTRUCTION

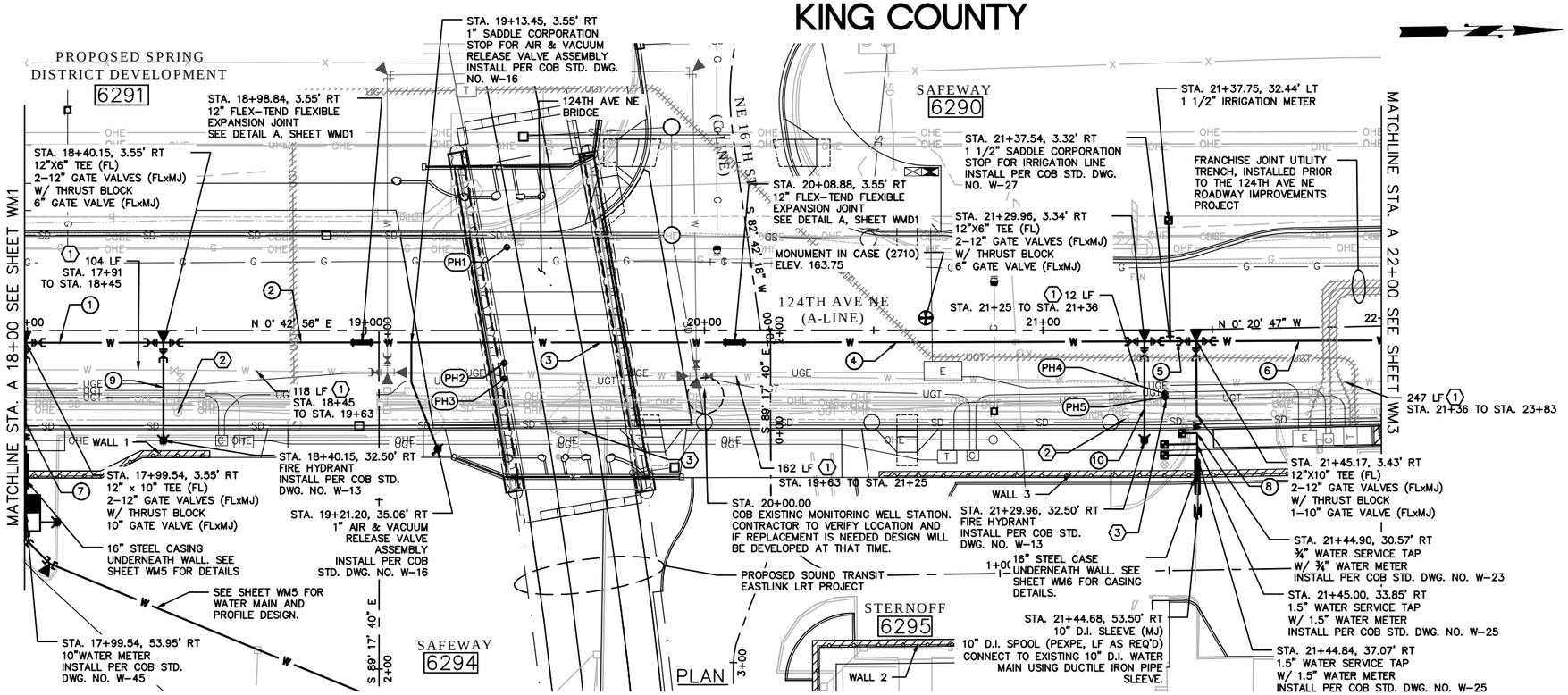

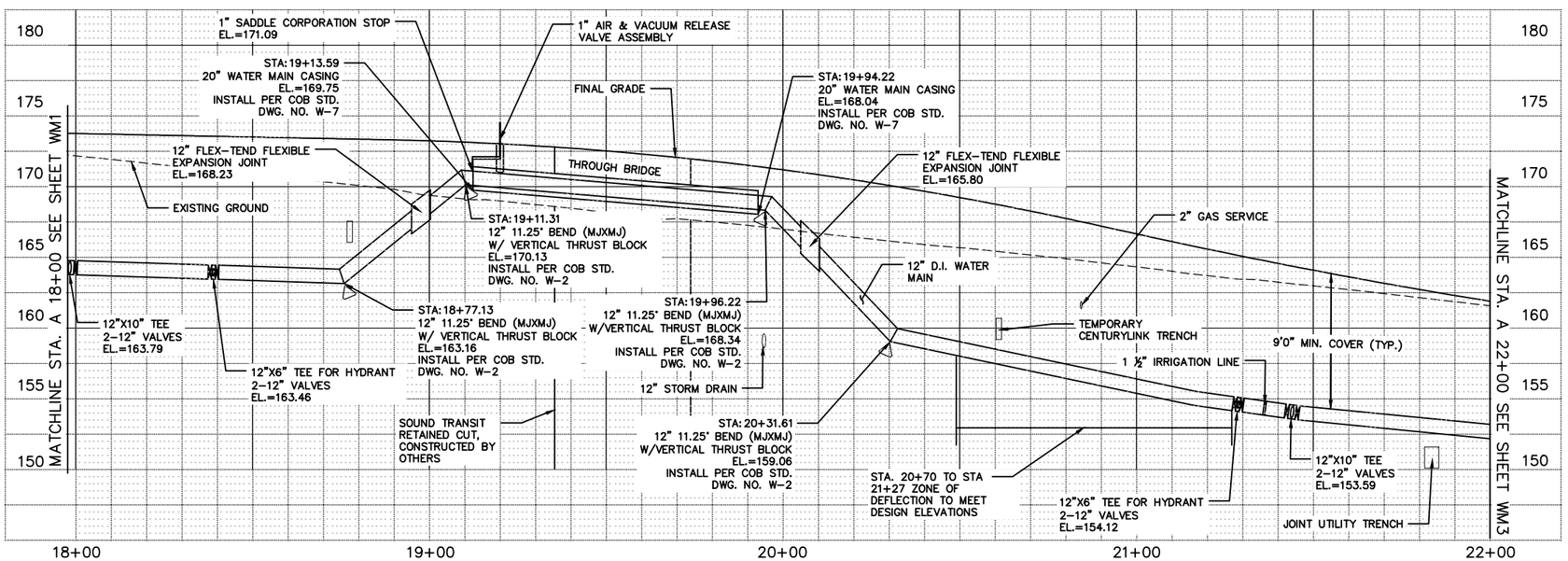

124TH AVE NE WATER MAIN PROFILE

GENERAL NOTES:

1. UNLESS OTHERWISE NOTED, ALL DIMENSIONS ARE IN FEET.
2. THE CONTRACTOR SHALL POTHOLE ALL POTENTIAL CONFLICTS WITH UTILITIES TO VERIFY THE HORIZONTAL AND VERTICAL LOCATION OF THE EXISTING UTILITIES. WHERE THE VERTICAL DISTANCE BETWEEN UTILITIES IS LESS THAN 6 INCHES, THE CONTRACTOR SHALL PROVIDE AN O.D. X O.D. X 2.5 INCH ETHAFOAM PAD PER THE SPECIAL PROVISIONS 7-08.3(2). THE O.D. DIMENSION IS BASED ON "THE LARGEST DIAMETER PIPE IN THE CROSSING CONFLICT", FOR THAT PARTICULAR LOCATION.
3. CALL UTILITIES UNDERGROUND LOCATION CENTER AT 1-800-424-5555 48 HOURS PRIOR TO CONSTRUCTION.
4. ALL WM PIPE SHALL BE DUCTILE IRON PIPE, CLASS 52.
5. STATIONS AND OFFSETS PROVIDED FOR TEES, BENDS, AND METERS ALL REFERENCE TO THE CENTER OF THE APPURTENANCE LOCATION.
6. THE CONTRACTOR SHALL SUBMIT A WATER MAIN LAY PLAN FOR ALL WATER MAIN SERVICE LATERALS LARGER THAN 2 INCHES IN SIZE TO THE ENGINEER AT LEAST 20 WORKING DAYS PRIOR TO PIPE INSTALLATION. THIS WORK SHALL INCLUDE ALL EQUIPMENT NECESSARY TO COMPLETE THE WORK.
7. THE JOINT UTILITY TRENCH (JUT) ACROSS 124TH AVE NE AND NORTH ALONG 124TH AVE NE FROM STA 21+80 UP TO STA 29+15 WILL BE INSTALLED BY THE FRANCHISE UTILITIES IN ADVANCE OF THE PROJECT. THE WORK TO BE PERFORMED FOR THE JUT BY THE CITY CONTRACTOR AS PART OF THE ROAD CONSTRUCTION WILL INCLUDE TRENCHING, GRAVEL BACKFILL, COMPACTION AND PAVING. THE LIMITS OF THIS WORK WILL EXTEND FROM STA 16+80 TO STA 21+80 AS SHOWN ON THESE PLANS.

LEGEND

	WATERMETER AND VAULT
	AIR & VACUUM RELEASE VALVE ASSY
	TEE & GATE VALVE
	FIRE HYDRANT
	FLEXIBLE EXPANSION JOINT
	REDUCER
	THRUST BLOCK
	PROPOSED CATCH BASIN TYPE 1
	PROPOSED CATCH BASIN TYPE 2
W	PROPOSED WATERMAIN
G	PROPOSED GAS
SD	PROPOSED STORM DRAIN
UGE	PROPOSED UNDERGROUND ELECTRICAL
UGT	PROPOSED TELECOM
X	EXISTING FENCE
G	EXISTING GAS
FO	EXISTING FIBER OPTIC
SD	EXISTING STORM DRAIN
SS	EXISTING SANITARY SEWER
W	EXISTING WATER LINE
OHT	EXISTING OVERHEAD TELEPHONE
OHTV	EXISTING OVERHEAD TELEVISION
OHE	EXISTING OVERHEAD ELECTRIC
UGT	EXISTING UNDERGROUND TELEPHONE
UGE	EXISTING UNDERGROUND ELECTRIC

CONSTRUCTION NOTES:

1. 40.6 LF OF 12" D.I.
2. 58.7 LF OF 12" D.I.
3. 110.1 LF OF 12" D.I.
4. 121.1 LF OF 12" D.I.
5. 15.3 LF OF 12" D.I.
6. 230.9 LF OF 12" D.I.
7. 58.2 LF OF 10" D.I.
8. 50.0 LF OF 10" D.I.
9. 28.9 LF OF 6" D.I.
10. 29.1 LF OF 6" D.I.

REMOVAL NOTES:

1. REMOVE EXISTING 12" WM PIPE.
2. REMOVE EXISTING FIRE HYDRANT AND LATERAL.
3. REMOVE EXISTING WATER SERVICE AND METER VAULT.

UTILITY POTHOLE INFORMATION:

PH1	8" GAS	GE=168.27,	TOP OF PIPE=164.1
PH2	1" POLYMER UNKNOWN,	GE=168.36,	TOP OF PIPE=165.8
PH3	10" DI WATER,	GE=168.06,	TOP OF PIPE=163.9
PH4	10" DI WATER,	GE=162.53,	TOP OF PIPE=158.2
PH5	5" COMM CONDUIT,	GE=162.31,	TOP OF CONDUIT=159.7

KEY PLAN: 1 | 2 | 3 | 4

HORIZONTAL SCALE: 20 10 0 20 40

VERTICAL SCALE: 5 2.5 0 5 10

J. MICHAEL STARLING — STATE OF WASHINGTON — 44740 — REGISTERED PROFESSIONAL ENGINEER

NO.	DATE	BY	APPR.	REVISIONS

Approved By

TRANSPORTATION DESIGN MANAGER — DATE
M. ARAKELYAN
PROJECT MANAGER — DATE

M. AUSTIN — DESIGNED BY — DATE
J. FRYE — DRAWN BY — DATE
G. ROYCROFT — CHECKED BY — DATE

City of Bellevue
TRANSPORTATION DEPARTMENT

HDR

124th Ave NE - NE Spring Blvd to NE Ichigo Way

WATER MAIN PLAN & PROFILE
STA. A 18+00 TO STA. A 22+00

SHEET NAME **WM2**

SECTION 28, T. 25 N., R5E., W.M.
KING COUNTY

95% SUBMITTAL NOT FOR CONSTRUCTION

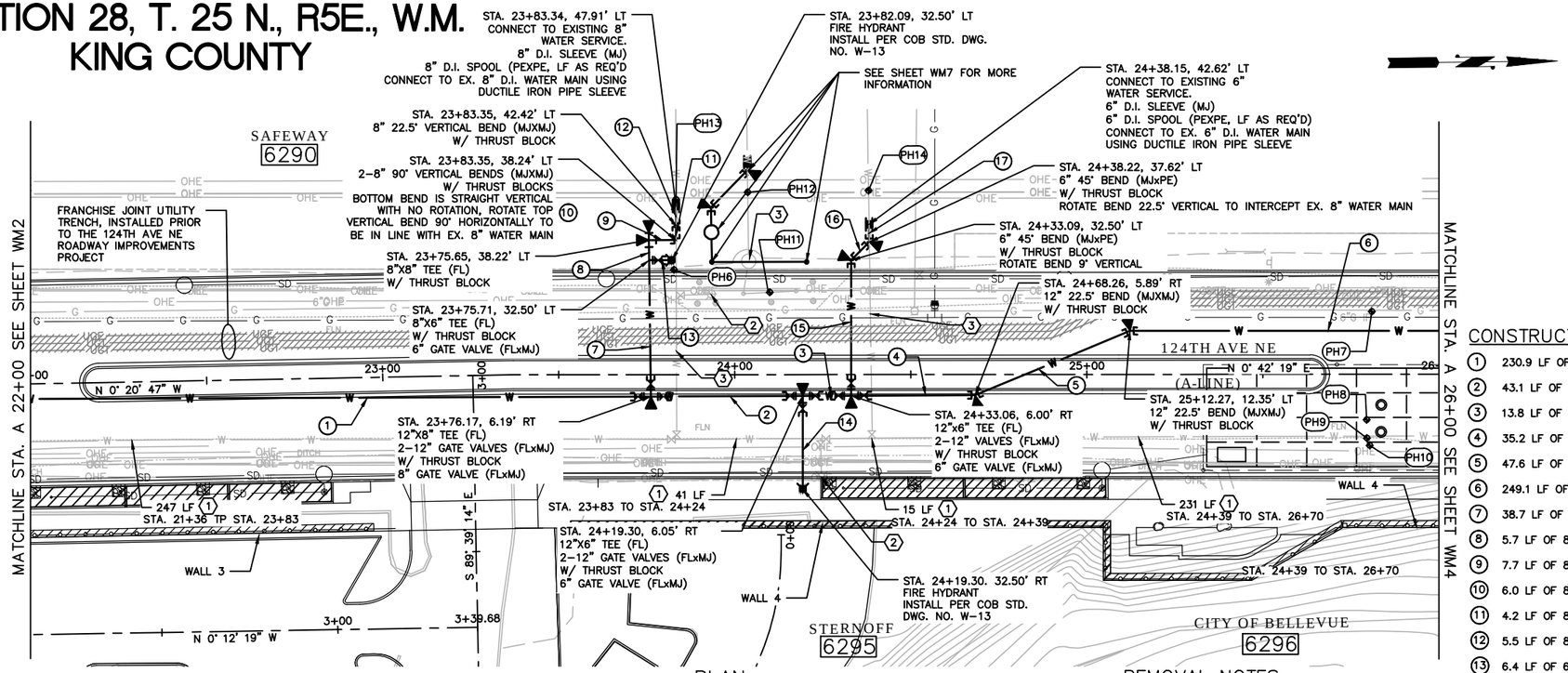

PLAN

REMOVAL NOTES:

1. REMOVE EXISTING 12" WM PIPE.
2. REMOVE EXISTING FIRE HYDRANT AND LATERAL.
3. REMOVE EXISTING WATER SERVICE AND METER VAULT.

GENERAL NOTES:

1. UNLESS OTHERWISE NOTED, ALL DIMENSIONS ARE IN FEET.
2. THE CONTRACTOR SHALL POTHOLE ALL POTENTIAL CONFLICTS WITH UTILITIES TO VERIFY THE HORIZONTAL AND VERTICAL LOCATION OF THE EXISTING UTILITIES. WHERE THE VERTICAL DISTANCE BETWEEN UTILITIES IS LESS THAN 6 INCHES, THE CONTRACTOR SHALL PROVIDE AN O.D. X O.D. X 2.5 INCH ETHAFOAM PAD PER THE SPECIAL PROVISIONS 7-08.3(2). THE O.D. DIMENSION IS BASED ON "THE LARGEST DIAMETER PIPE IN THE CROSSING CONFLICT", FOR THAT PARTICULAR LOCATION.
3. CALL UTILITIES UNDERGROUND LOCATION CENTER AT 1-800-424-5555 48 HOURS PRIOR TO CONSTRUCTION.
4. ALL WM PIPE SHALL BE DUCTILE IRON PIPE, CLASS 52.
5. STATIONS AND OFFSETS PROVIDED FOR TEES, BENDS, AND METERS ALL REFERENCE TO THE CENTER OF THE APPURTENANCE LOCATION.
6. THE CONTRACTOR SHALL SUBMIT A WATER MAIN LAY PLAN FOR ALL WATER MAIN SERVICE LATERALS LARGER THAN 2 INCHES IN SIZE TO THE ENGINEER AT LEAST 20 WORKING DAYS PRIOR TO PIPE INSTALLATION. THIS WORK SHALL INCLUDE ALL EQUIPMENT NECESSARY TO COMPLETE THE WORK.
7. THE JOINT UTILITY TRENCH (JUT) ACROSS 124TH AVE NE AND NORTH ALONG 124TH AVE NE FROM STA 21+80 UP TO STA 29+15 WILL BE INSTALLED BY THE FRANCHISE UTILITIES IN ADVANCE OF THE PROJECT. THE WORK TO BE PERFORMED FOR THE JUT BY THE CITY CONTRACTOR AS PART OF THE ROAD CONSTRUCTION WILL INCLUDE TRENCHING, GRAVEL BACKFILL, COMPACTION AND PAVING. THE LIMITS OF THIS WORK WILL EXTEND FROM STA 16+80 TO STA 21+80 AS SHOWN ON THESE PLANS.

CONSTRUCTION NOTES:

1. 230.9 LF OF 12" D.I.
2. 43.1 LF OF 12" D.I.
3. 13.8 LF OF 12" D.I.
4. 35.2 LF OF 12" D.I.
5. 47.6 LF OF 12" D.I.
6. 249.1 LF OF 12" D.I.
7. 38.7 LF OF 8" D.I.
8. 5.7 LF OF 8" D.I.
9. 7.7 LF OF 8" D.I.
10. 6.0 LF OF 8" D.I. (VERTICAL)
11. 4.2 LF OF 8" D.I.
12. 5.5 LF OF 8" D.I.
13. 6.4 LF OF 6" D.I.
14. 26.4 LF OF 6" D.I.
15. 38.5 LF OF 6" D.I.
16. 7.2 LF OF 6" D.I.
17. 5.0 LF OF 6" D.I.

LEGEND

	WATERMETER AND VAULT
	AIR & VACUUM RELEASE VALVE ASSY
	TEE & GATE VALVE
	FIRE HYDRANT
	FLEXIBLE EXPANSION JOINT
	REDUCER
	THRUST BLOCK
	PROPOSED CATCH BASIN TYPE 1
	PROPOSED CATCH BASIN TYPE 2
W	PROPOSED WATERMAIN
G	PROPOSED GAS
SD	PROPOSED STORM DRAIN
UGE	PROPOSED UNDERGROUND ELECTRICAL
UGT	PROPOSED TELECOM
X	EXISTING FENCE
G	EXISTING GAS
FO	EXISTING FIBER OPTIC
SD	EXISTING STORM DRAIN
SS	EXISTING SANITARY SEWER
W	EXISTING WATER LINE
OHT	EXISTING OVERHEAD TELEPHONE
OHTV	EXISTING OVERHEAD TELEVISION
OHE	EXISTING OVERHEAD ELECTRIC
UGT	EXISTING UNDERGROUND TELEPHONE
UGE	EXISTING UNDERGROUND ELECTRIC

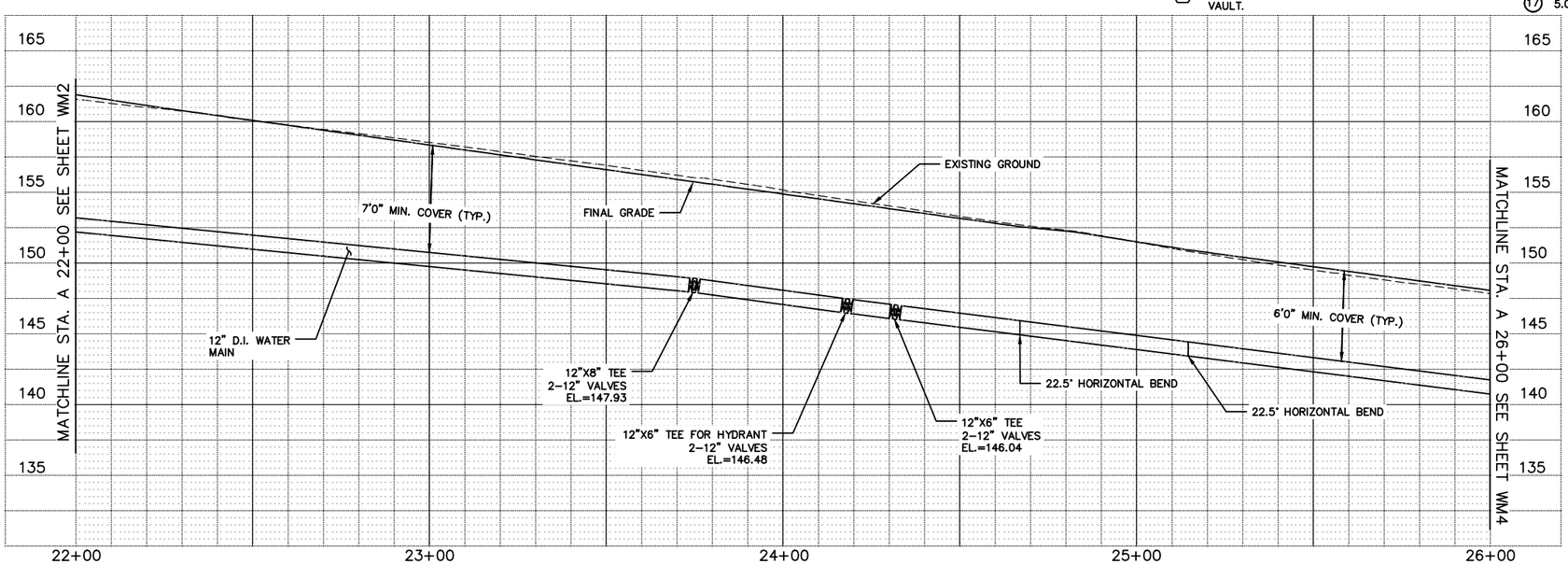

124TH AVE NE WATER MAIN PROFILE

UTILITY POTHOLE INFORMATION:

PH6	8" DIP WATER	GE=154.83,	TOP OF PIPE=149.8
PH7	6" GAS,	GE=148.20,	TOP OF PIPE=144.9
PH8	¾" POLYMER UNKNOWN,	GE=148.75,	TOP OF PIPE=145.6
PH9	12" DI WATER,	GE=148.96,	TOP OF PIPE=143.2
PH10	(1)1"&(2)2" PVC COMM,	GE=148.60,	TOP OF CONDUIT=145.5
PH11	8" DIP WATER	GE=154.3,	TOP OF PIPE=149.6
PH12	8" DIP WATER	GE=163.8,	TOP OF PIPE=156.1
PH13	8" CIP WATER	GE=162.3,	TOP OF PIPE=157.5
PH14	6" DIP WATER	GE=163.4,	TOP OF PIPE=156.2
PH15	8" DIP WATER	GE=175.5,	TOP OF PIPE=171.3

20 10 0 20 40
HORIZONTAL SCALE

5 2.5 0 5 10
VERTICAL SCALE

1 2 4
KEY PLAN

J. MICHAEL STALLING
STATE OF WASHINGTON
44740
REGISTERED PROFESSIONAL ENGINEER

NO.	DATE	BY	APPR.	REVISIONS

Approved By

TRANSPORTATION DESIGN MANAGER — DATE
M. ARAKELYAN
PROJECT MANAGER — DATE

M. AUSTIN — DESIGNED BY — DATE
J. FRYE — DRAWN BY — DATE
G. ROYCROFT — CHECKED BY — DATE

City of Bellevue
TRANSPORTATION DEPARTMENT

HDR

124th Ave NE - NE Spring Blvd to NE Ichigo Way

WATER MAIN PLAN & PROFILE
STA. A 22+00 TO STA. A 26+00

SHEET NAME **WM3**

SECTION 28, T. 25 N., R5E., W.M.
KING COUNTY

95% SUBMITTAL NOT FOR CONSTRUCTION

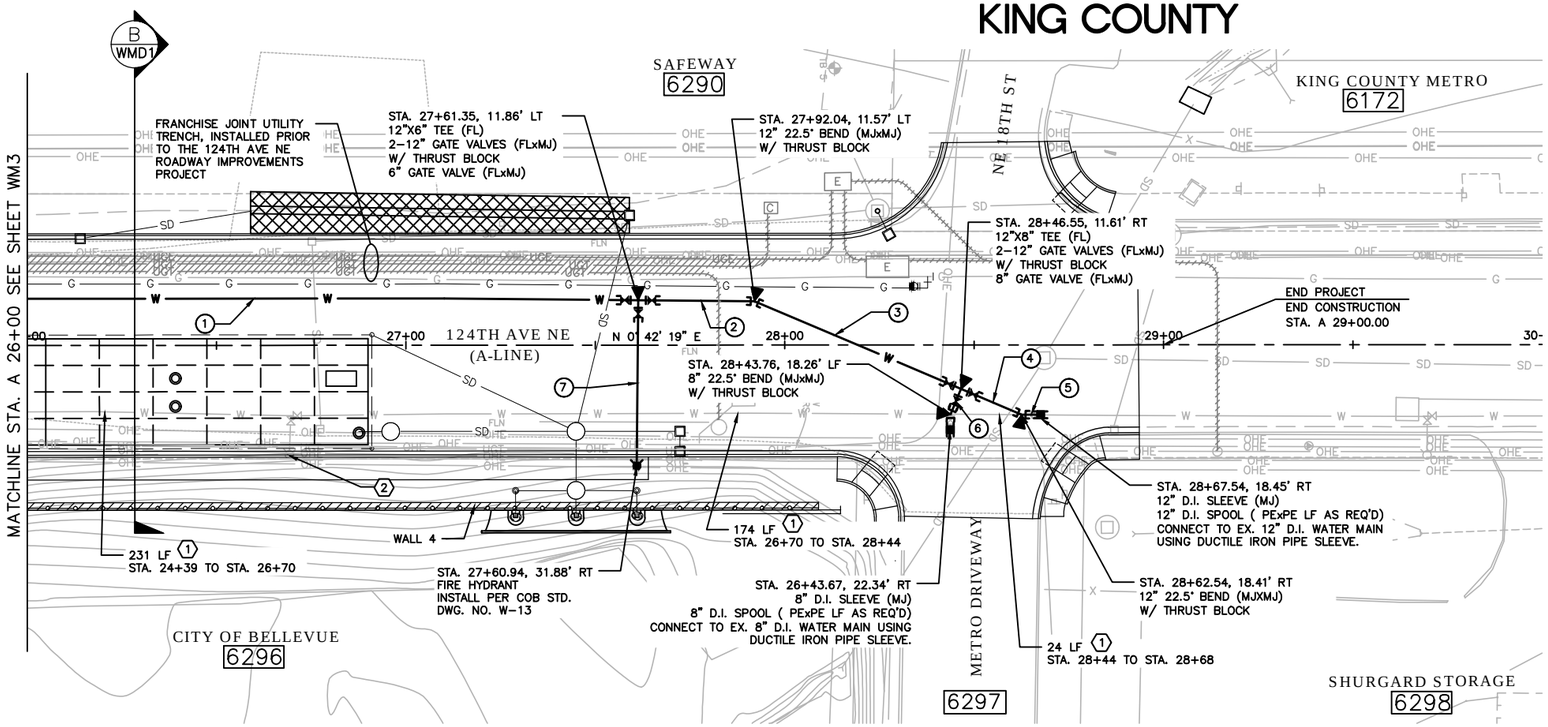

PLAN

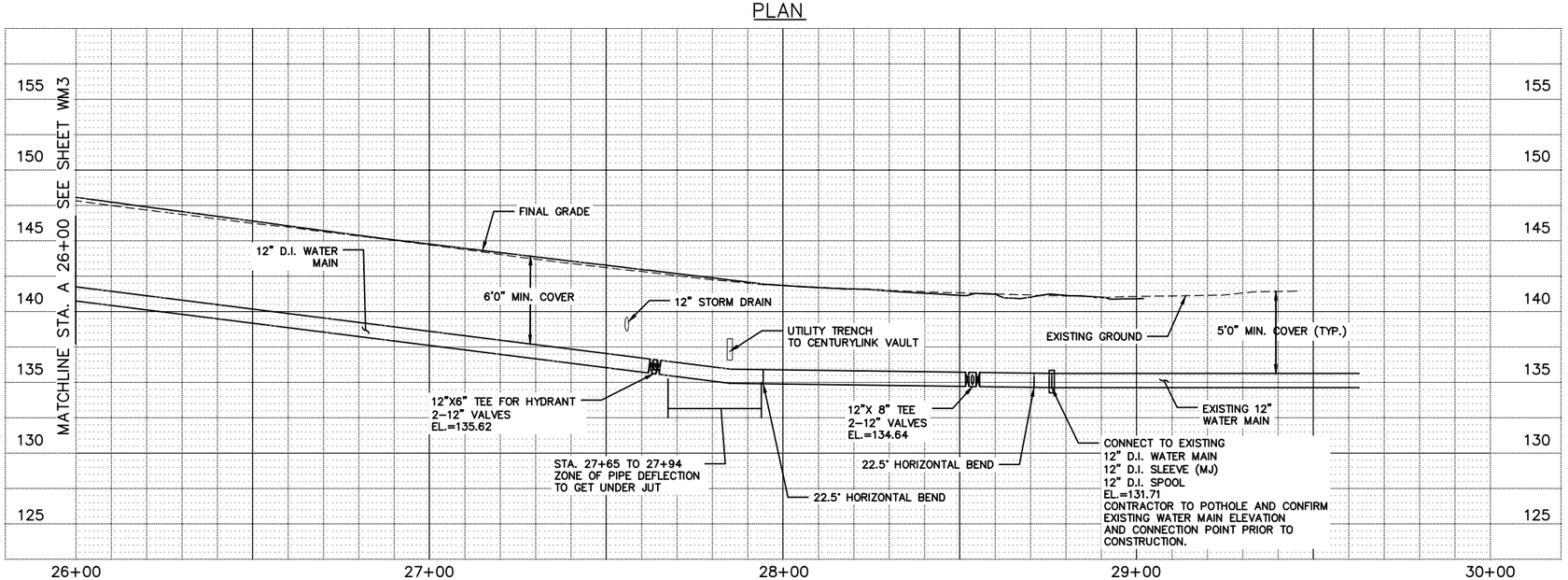

124TH AVE NE WATER MAIN PROFILE

GENERAL NOTES:

1. UNLESS OTHERWISE NOTED, ALL DIMENSIONS ARE IN FEET.
2. THE CONTRACTOR SHALL POTHOLE ALL POTENTIAL CONFLICTS WITH UTILITIES TO VERIFY THE HORIZONTAL AND VERTICAL LOCATION OF THE EXISTING UTILITIES. WHERE THE VERTICAL DISTANCE BETWEEN UTILITIES IS LESS THAN 6 INCHES, THE CONTRACTOR SHALL PROVIDE AN O.D. X O.D. X 2.5 INCH ETHAFOAM PAD PER THE SPECIAL PROVISIONS 7-08.3(2). THE O.D. DIMENSION IS BASED ON "THE LARGEST DIAMETER PIPE IN THE CROSSING CONFLICT", FOR THAT PARTICULAR LOCATION.
3. CALL UTILITIES UNDERGROUND LOCATION CENTER AT 1-800-424-5555 48 HOURS PRIOR TO CONSTRUCTION.
4. ALL WM PIPE SHALL BE DUCTILE IRON PIPE, CLASS 52.
5. STATIONS AND OFFSETS PROVIDED FOR TEES, BENDS, AND METERS ALL REFERENCE TO THE CENTER OF THE APPURTENANCE LOCATION.
6. THE CONTRACTOR SHALL SUBMIT A WATER MAIN LAY PLAN FOR ALL WATER MAIN SERVICE LATERALS LARGER THAN 2 INCHES IN SIZE TO THE ENGINEER AT LEAST 20 WORKING DAYS PRIOR TO PIPE INSTALLATION. THIS WORK SHALL INCLUDE ALL EQUIPMENT NECESSARY TO COMPLETE THE WORK.
7. THE JOINT UTILITY TRENCH (JUT) ACROSS 124TH AVE NE AND NORTH ALONG 124TH AVE NE FROM STA 21+80 UP TO STA 29+15 WILL BE INSTALLED BY THE FRANCHISE UTILITIES IN ADVANCE OF THE PROJECT. THE WORK TO BE PERFORMED FOR THE JUT BY THE CITY CONTRACTOR AS PART OF THE ROAD CONSTRUCTION WILL INCLUDE TRENCHING, GRAVEL BACKFILL, COMPACTION AND PAVING. THE LIMITS OF THIS WORK WILL EXTEND FROM STA 16+80 TO STA 21+80 AS SHOWN ON THESE PLANS.

LEGEND

	WATERMETER AND VAULT
	AIR & VACUUM RELEASE VALVE ASSY
	TEE & GATE VALVE
	FIRE HYDRANT
	FLEXIBLE EXPANSION JOINT
	REDUCER
	THRUST BLOCK
	PROPOSED CATCH BASIN TYPE 1
	PROPOSED CATCH BASIN TYPE 2
W	PROPOSED WATERMAIN
G	PROPOSED GAS
SD	PROPOSED STORM DRAIN
UGE	PROPOSED UNDERGROUND ELECTRICAL
UGT	PROPOSED TELECOM
X	EXISTING FENCE
G	EXISTING GAS
FO	EXISTING FIBER OPTIC
SD	EXISTING STORM DRAIN
SS	EXISTING SANITARY SEWER
W	EXISTING WATER LINE
OHT	EXISTING OVERHEAD TELEPHONE
OHTV	EXISTING OVERHEAD TELEVISION
OHE	EXISTING OVERHEAD ELECTRIC
UGT	EXISTING UNDERGROUND TELEPHONE
UGE	EXISTING UNDERGROUND ELECTRIC

CONSTRUCTION NOTES:

1. 249.1 LF OF 12" D.I.
2. 30.7 LF OF 12" D.I.
3. 59.2 LF OF 12" D.I.
4. 17.4 LF OF 12" D.I.
5. 5.0 LF OF 12" D.I.
6. 7.2 LF OF 8" D.I.
7. 43.7 LF OF 6" D.I.

REMOVAL NOTES:

1. REMOVE EXISTING 12" WM PIPE.
2. REMOVE EXISTING FIRE HYDRANT AND LATERAL.

20 10 0 20 40
HORIZONTAL SCALE

5 2.5 0 5 10
VERTICAL SCALE

1 2 3
KEY PLAN

T. MICHAEL STARLING
STATE OF WASHINGTON
44740
REGISTERED
PROFESSIONAL ENGINEER

NO.	DATE	BY	APPR.	REVISIONS

Approved By

TRANSPORTATION DESIGN MANAGER — DATE
M. ARAKELYAN
PROJECT MANAGER — DATE

M. AUSTIN — DESIGNED BY — DATE
J. FRYE — DRAWN BY — DATE
G. ROYCROFT — CHECKED BY — DATE

City of Bellevue
TRANSPORTATION DEPARTMENT

HDR

124th Ave NE - NE Spring Blvd to NE Ichigo Way

WATER MAIN PLAN & PROFILE
STA. A 26+00 TO STA. A 30+00

SHEET NAME **WM4**

SHT 90 OF 198

SECTION 28, T. 25 N., R5E., W.M.
KING COUNTY

95% SUBMITTAL NOT FOR CONSTRUCTION

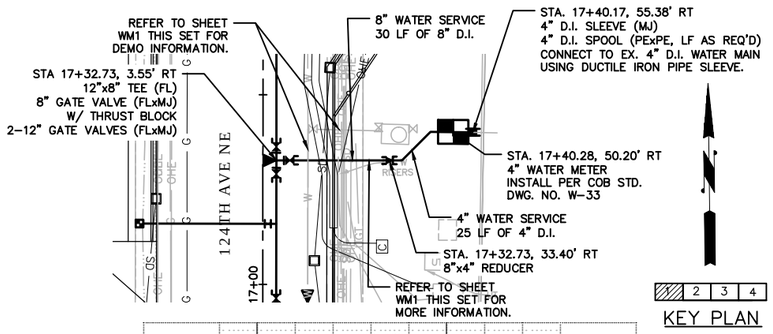

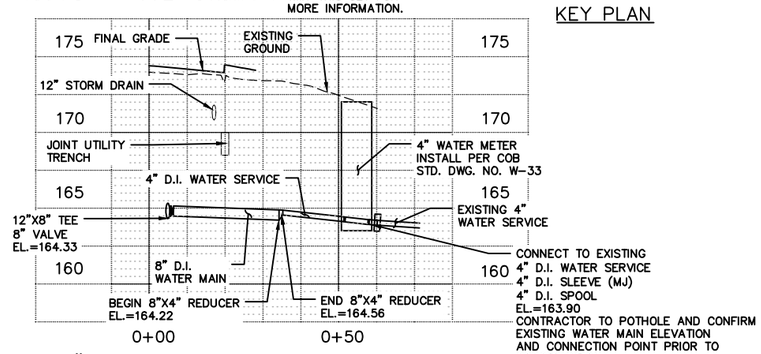

8" WATER SERVICE PROFILE–STA 17+32

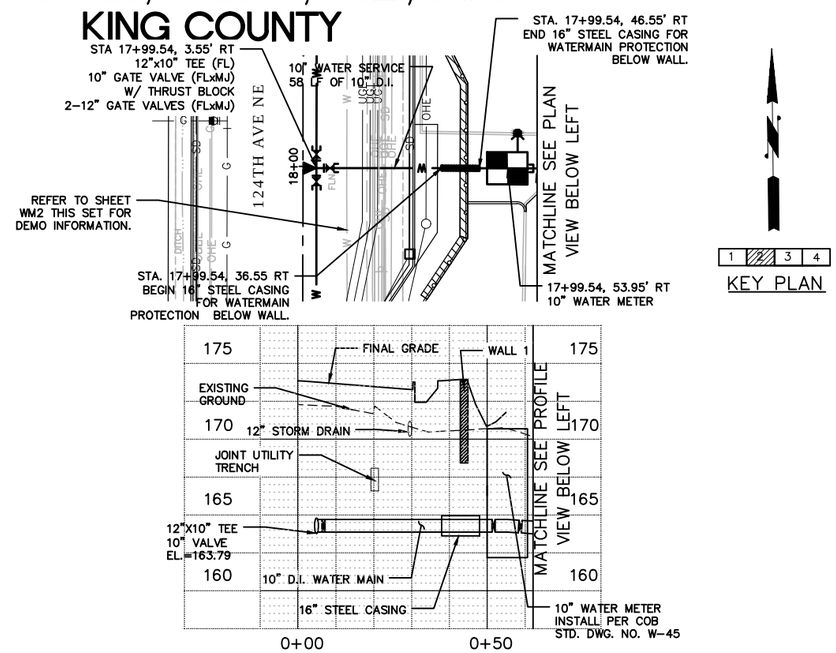

10" WATER SERVICE PROFILE–STA 17+99

GENERAL NOTES:

1. UNLESS OTHERWISE NOTED, ALL DIMENSIONS ARE IN FEET.
2. THE CONTRACTOR SHALL POTHOLE ALL POTENTIAL CONFLICTS WITH UTILITIES TO VERIFY THE HORIZONTAL AND VERTICAL LOCATION OF THE EXISTING UTILITIES. WHERE THE VERTICAL DISTANCE BETWEEN UTILITIES IS LESS THAN 6 INCHES, THE CONTRACTOR SHALL PROVIDE AN O.D. X O.D. X 2.5 INCH ETHAFOAM PAD PER THE SPECIAL PROVISIONS 7–08.3(2). THE O.D. DIMENSION IS BASED ON "THE LARGEST DIAMETER PIPE IN THE CROSSING CONFLICT", FOR THAT PARTICULAR LOCATION.
3. CALL UTILITIES UNDERGROUND LOCATION CENTER AT 1–800–424–5555 48 HOURS PRIOR TO CONSTRUCTION.
4. ALL WM PIPE SHALL BE DUCTILE IRON PIPE, CLASS 52.
5. STATIONS AND OFFSETS PROVIDED FOR TEES, BENDS, AND METERS ALL REFERENCE TO THE CENTER OF THE APPURTENANCE LOCATION.
6. THE CONTRACTOR SHALL SUBMIT A WATER MAIN LAY PLAN FOR ALL WATER MAIN SERVICE LATERALS LARGER THAN 2 INCHES IN SIZE TO THE ENGINEER AT LEAST 20 WORKING DAYS PRIOR TO PIPE INSTALLATION. THIS WORK SHALL INCLUDE ALL EQUIPMENT NECESSARY TO COMPLETE THE WORK.

LEGEND

- WATERMETER AND VAULT
- AIR & VACUUM RELEASE VALVE ASSY
- TEE & GATE VALVE
- FIRE HYDRANT
- FLEXIBLE EXPANSION JOINT
- REDUCER
- THRUST BLOCK
- PROPOSED CATCH BASIN TYPE 1
- PROPOSED CATCH BASIN TYPE 2
- W — PROPOSED WATERMAIN
- G — PROPOSED GAS
- SD — PROPOSED STORM DRAIN
- UGE — PROPOSED UNDERGROUND ELECTRICAL
- UGT — PROPOSED TELECOM
- X — EXISTING FENCE
- G — EXISTING GAS
- FO — EXISTING FIBER OPTIC
- SD — EXISTING STORM DRAIN
- SS — EXISTING SANITARY SEWER
- W — EXISTING WATER LINE
- OHT — EXISTING OVERHEAD TELEPHONE
- OHTV — EXISTING OVERHEAD TELEVISION
- OHE — EXISTING OVERHEAD ELECTRIC
- UGT — EXISTING UNDERGROUND TELEPHONE
- UGE — EXISTING UNDERGROUND ELECTRIC

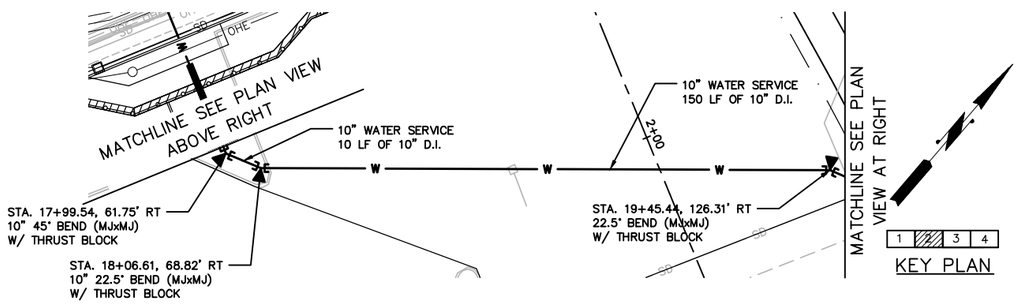

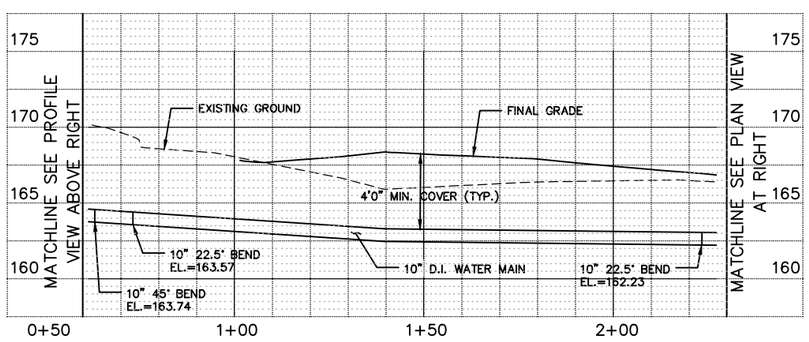

10" WATER SERVICE PROFILE–STA 17+99

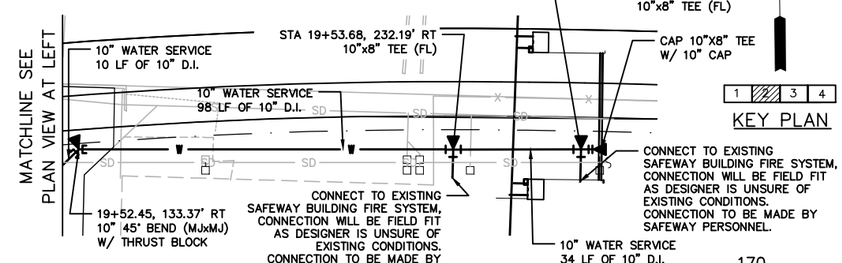

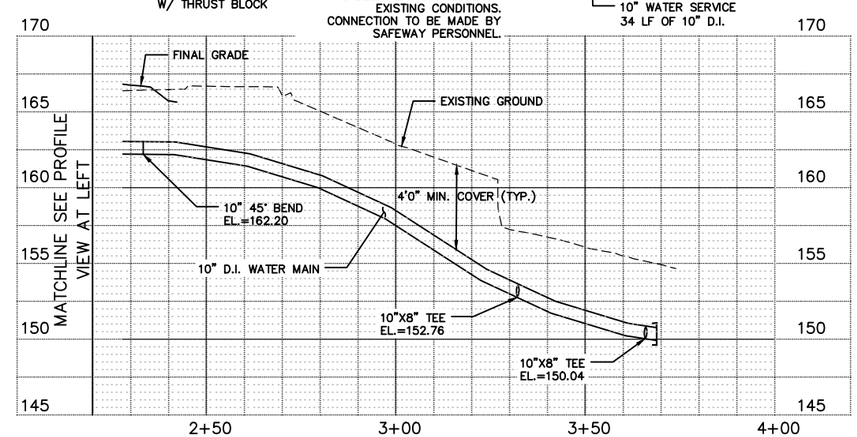

10" WATER SERVICE PROFILE–STA 17+99

20 10 0 20 40 HORIZONTAL SCALE

5 2.5 0 5 10 VERTICAL SCALE

NO.	DATE	BY	APPR.	REVISIONS

Approved By

TRANSPORTATION DESIGN MANAGER — DATE
M. ARAKELYAN
PROJECT MANAGER — DATE

M. AUSTIN — DESIGNED BY — DATE
J. FRYE — DRAWN BY — DATE
G. ROYCROFT — CHECKED BY — DATE

City of Bellevue
TRANSPORTATION DEPARTMENT

HDR

124th Ave NE - NE Spring Blvd to NE Ichigo Way

WATER MAIN PLAN & PROFILE

SHEET NAME **WM5**

SHT 91 OF 198

SECTION 28, T. 25 N., R5E., W.M.
KING COUNTY

95% SUBMITTAL NOT FOR CONSTRUCTION

GENERAL NOTES:

1. UNLESS OTHERWISE NOTED, ALL DIMENSIONS ARE IN FEET.
2. THE CONTRACTOR SHALL POTHOLE ALL POTENTIAL CONFLICTS WITH UTILITIES TO VERIFY THE HORIZONTAL AND VERTICAL LOCATION OF THE EXISTING UTILITIES. WHERE THE VERTICAL DISTANCE BETWEEN UTILITIES IS LESS THAN 6 INCHES, THE CONTRACTOR SHALL PROVIDE AN O.D. X O.D. X 2.5 INCH ETHAFOAM PAD PER THE SPECIAL PROVISIONS 7-08.3(2). THE O.D. DIMENSION IS BASED ON "THE LARGEST DIAMETER PIPE IN THE CROSSING CONFLICT", FOR THAT PARTICULAR LOCATION.
3. CALL UTILITIES UNDERGROUND LOCATION CENTER AT 1-800-424-5555 48 HOURS PRIOR TO CONSTRUCTION.
4. ALL WM PIPE SHALL BE DUCTILE IRON PIPE, CLASS 52.
5. STATIONS AND OFFSETS PROVIDED FOR TEES, BENDS, AND METERS ALL REFERENCE TO THE CENTER OF THE APPURTENANCE LOCATION.
6. THE CONTRACTOR SHALL SUBMIT A WATER MAIN LAY PLAN FOR ALL WATER MAIN SERVICE LATERALS LARGER THAN 2 INCHES IN SIZE TO THE ENGINEER AT LEAST 20 WORKING DAYS PRIOR TO PIPE INSTALLATION. THIS WORK SHALL INCLUDE ALL EQUIPMENT NECESSARY TO COMPLETE THE WORK.

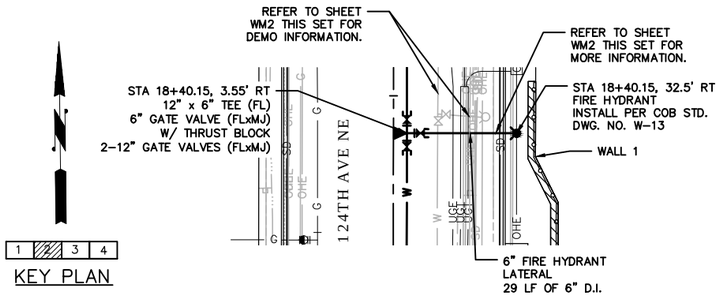

KEY PLAN

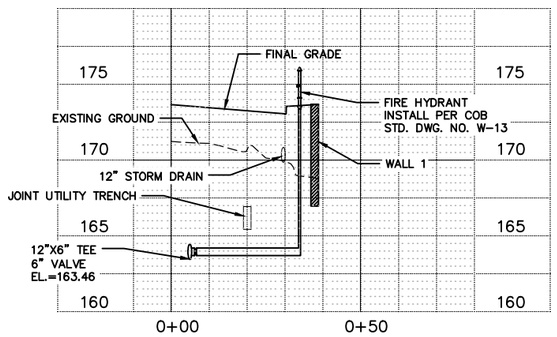

FIRE HYDRANT PROFILE-STA 18+40

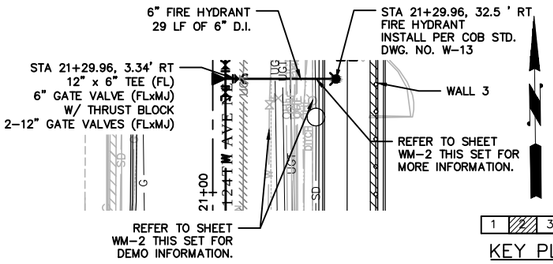

KEY PLAN

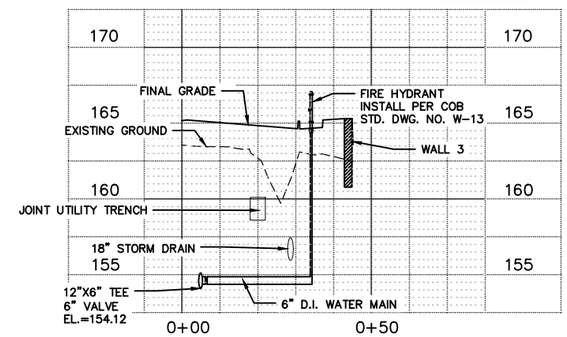

FIRE HYDRANT PROFILE-STA 21+30

LEGEND

	WATERMETER AND VAULT
	AIR & VACUUM RELEASE VALVE ASSY
	TEE & GATE VALVE
	FIRE HYDRANT
	FLEXIBLE EXPANSION JOINT
	REDUCER
	THRUST BLOCK
	PROPOSED CATCH BASIN TYPE 1
	PROPOSED CATCH BASIN TYPE 2
W	PROPOSED WATERMAIN
G	PROPOSED GAS
SD	PROPOSED STORM DRAIN
UGE	PROPOSED UNDERGROUND ELECTRICAL
UGT	PROPOSED TELECOM
X	EXISTING FENCE
G	EXISTING GAS
FO	EXISTING FIBER OPTIC
SD	EXISTING STORM DRAIN
SS	EXISTING SANITARY SEWER
W	EXISTING WATER LINE
OHT	EXISTING OVERHEAD TELEPHONE
OHTV	EXISTING OVERHEAD TELEVISION
OHE	EXISTING OVERHEAD ELECTRIC
UGT	EXISTING UNDERGROUND TELEPHONE
UGE	EXISTING UNDERGROUND ELECTRIC

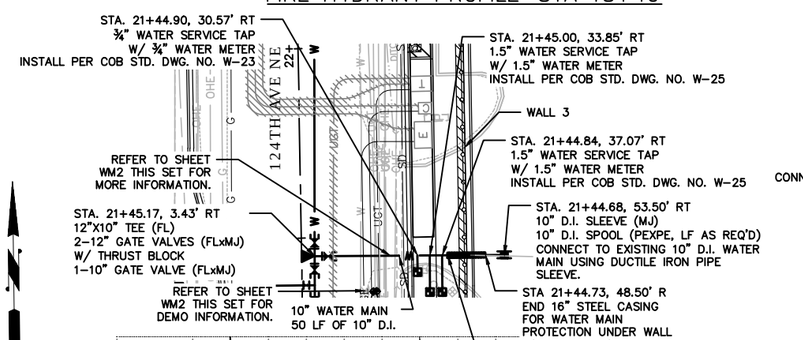

KEY PLAN

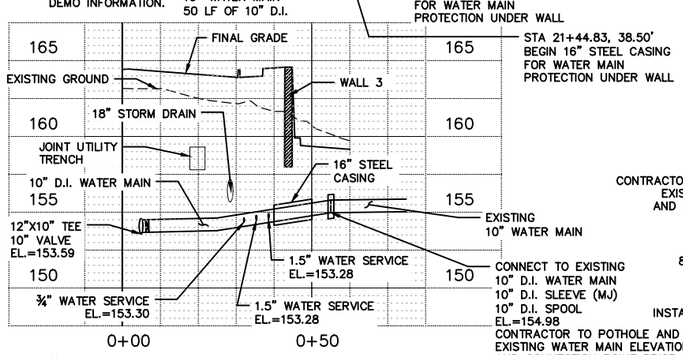

10" WATER SERVICE PROFILE-STA 21+45

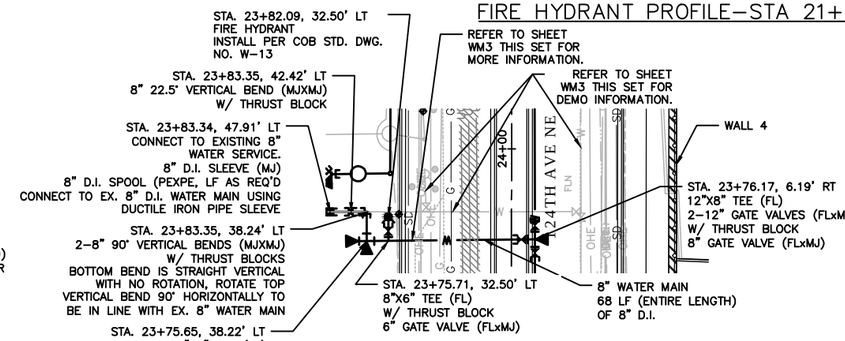

KEY PLAN

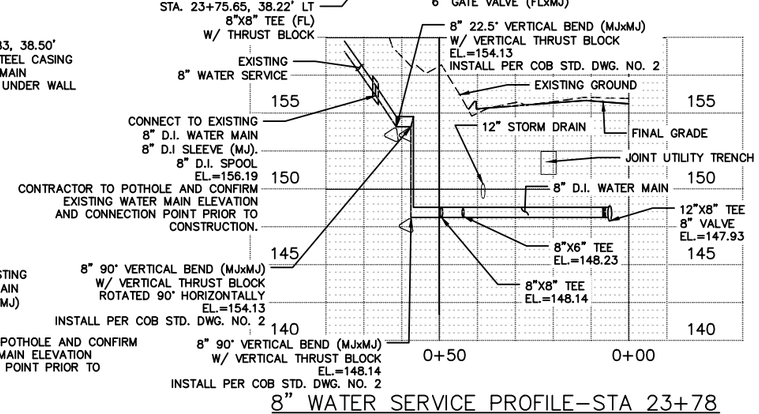

8" WATER SERVICE PROFILE-STA 23+78

NO.	DATE	BY	APPR.	REVISIONS

Approved By

TRANSPORTATION DESIGN MANAGER — DATE
M. ARAKELYAN
PROJECT MANAGER — DATE

M. AUSTIN — DESIGNED BY — DATE
J. FRYE — DRAWN BY — DATE
G. ROYCROFT — CHECKED BY — DATE

City of Bellevue
TRANSPORTATION DEPARTMENT

HDR

124th Ave NE - NE Spring Blvd to NE Ichigo Way

WATER MAIN PLAN & PROFILE

SHEET NAME **WM6**

SHT 92 OF 198

SECTION 28, T. 25 N., R5E., W.M.
KING COUNTY

95% SUBMITTAL NOT FOR CONSTRUCTION

GENERAL NOTES:

1. UNLESS OTHERWISE NOTED, ALL DIMENSIONS ARE IN FEET.
2. THE CONTRACTOR SHALL POTHOLE ALL POTENTIAL CONFLICTS WITH UTILITIES TO VERIFY THE HORIZONTAL AND VERTICAL LOCATION OF THE EXISTING UTILITIES. WHERE THE VERTICAL DISTANCE BETWEEN UTILITIES IS LESS THAN 6 INCHES, THE CONTRACTOR SHALL PROVIDE AN O.D. X O.D. X 2.5 INCH ETHAFOAM PAD PER THE SPECIAL PROVISIONS 7-08.3(2). THE O.D. DIMENSION IS BASED ON "THE LARGEST DIAMETER PIPE IN THE CROSSING CONFLICT", FOR THAT PARTICULAR LOCATION.
3. CALL UTILITIES UNDERGROUND LOCATION CENTER AT 1-800-424-5555 48 HOURS PRIOR TO CONSTRUCTION.
4. ALL WM PIPE SHALL BE DUCTILE IRON PIPE, CLASS 52.
5. STATIONS AND OFFSETS PROVIDED FOR TEES, BENDS, AND METERS ALL REFERENCE TO THE CENTER OF THE APPURTENANCE LOCATION.
6. THE CONTRACTOR SHALL SUBMIT A WATER MAIN LAY PLAN FOR ALL WATER MAIN SERVICE LATERALS LARGER THAN 2 INCHES IN SIZE TO THE ENGINEER AT LEAST 20 WORKING DAYS PRIOR TO PIPE INSTALLATION. THIS WORK SHALL INCLUDE ALL EQUIPMENT NECESSARY TO COMPLETE THE WORK.

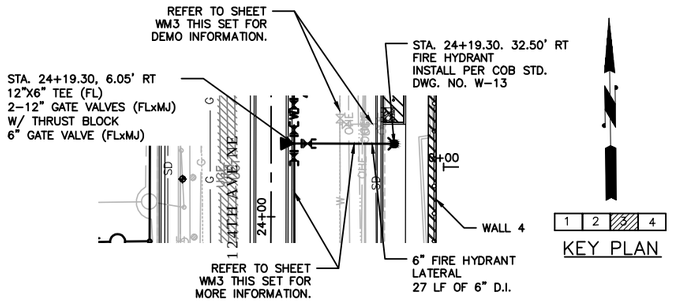

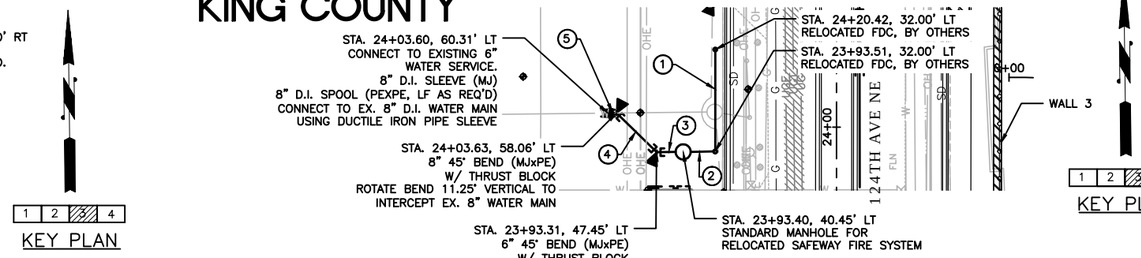

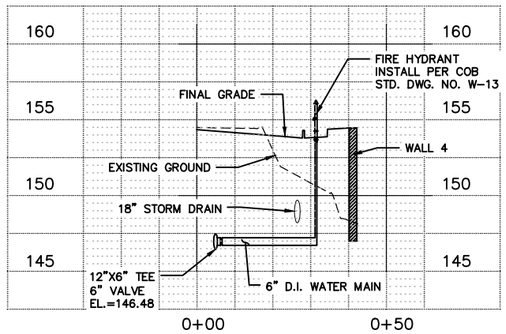

FIRE HYDRANT PROFILE-STA 24+19

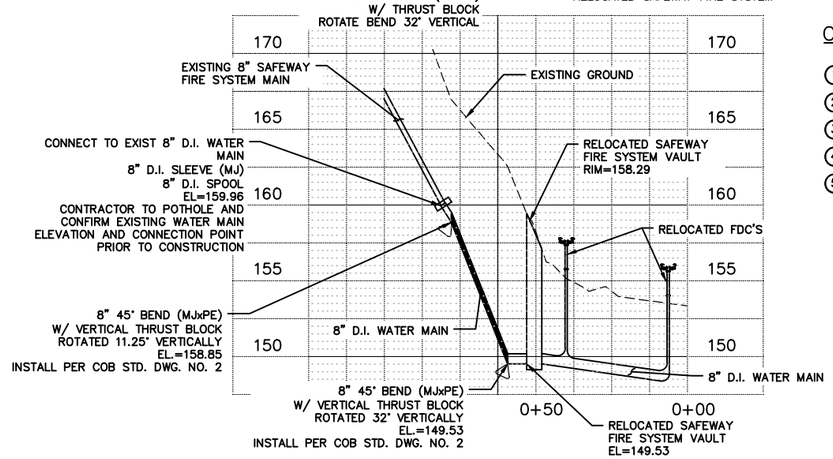

8" SAFEWAY FDC AND VAULT PROFILE-STA 23+93

CONSTRUCTION NOTES:

1. 26.9 LF OF 8" D.I.
2. 8.5 LF OF 8" D.I.
3. 7.0 LF OF 8" D.I.
4. 14.8 LF OF 8" D.I.
5. 2.3 LF OF 8" D.I.

LEGEND

- WATERMETER AND VAULT
- AIR & VACUUM RELEASE VALVE ASSY
- TEE & GATE VALVE
- FIRE HYDRANT
- FLEXIBLE EXPANSION JOINT
- REDUCER
- THRUST BLOCK
- PROPOSED CATCH BASIN TYPE 1
- PROPOSED CATCH BASIN TYPE 2
- W — PROPOSED WATERMAIN
- G — PROPOSED GAS
- SD — PROPOSED STORM DRAIN
- UGE — PROPOSED UNDERGROUND ELECTRICAL
- UGT — PROPOSED TELECOM
- X — EXISTING FENCE
- G — EXISTING GAS
- FO — EXISTING FIBER OPTIC
- SD — EXISTING STORM DRAIN
- SS — EXISTING SANITARY SEWER
- W — EXISTING WATER LINE
- OHT — EXISTING OVERHEAD TELEPHONE
- OHTV — EXISTING OVERHEAD TELEVISION
- OHE — EXISTING OVERHEAD ELECTRIC
- UGT — EXISTING UNDERGROUND TELEPHONE
- UGE — EXISTING UNDERGROUND ELECTRIC

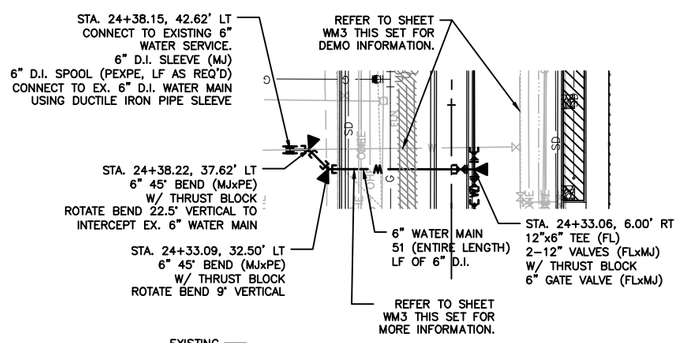

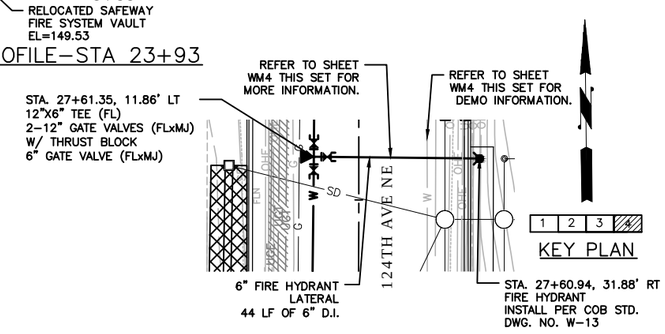

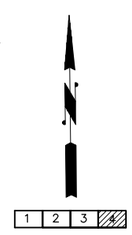

KEY PLAN

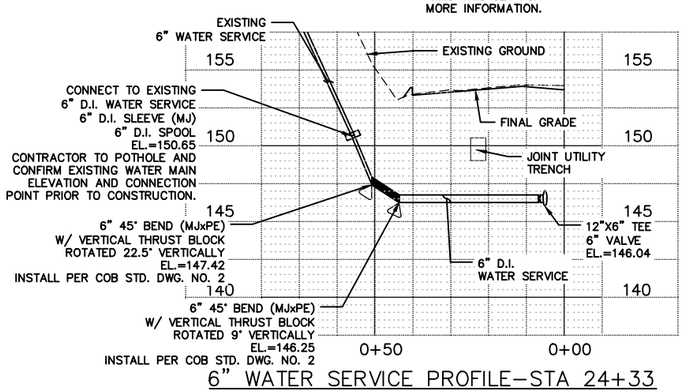

6" WATER SERVICE PROFILE-STA 24+33

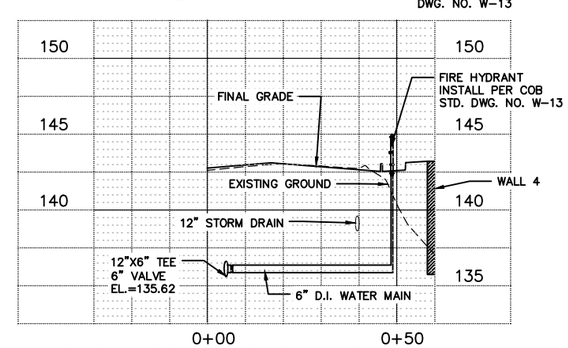

FIRE HYDRANT PROFILE-STA 26+50

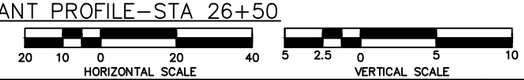

NO.	DATE	BY	APPR.	REVISIONS

Approved By

TRANSPORTATION DESIGN MANAGER — DATE
M. ARAKELYAN
PROJECT MANAGER — DATE

M. AUSTIN — DESIGNED BY — DATE
J. FRYE — DRAWN BY — DATE
G. ROYCROFT — CHECKED BY — DATE

City of Bellevue
TRANSPORTATION DEPARTMENT

HDR

124th Ave NE - NE Spring Blvd to NE Ichigo Way

WATER MAIN PLAN & PROFILE

SHEET NAME **WM7**

SHT 93 OF 198

95% SUBMITTAL NOT FOR CONSTRUCTION

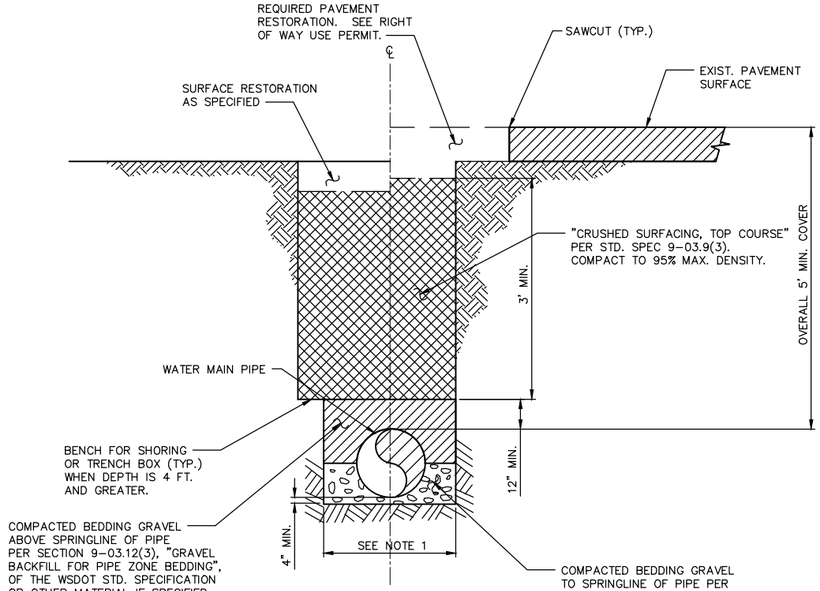

PAVED AREAS

NOTES:

1. MAXIMUM WIDTH OF TRENCH AT TOP OF PIPE:
   * 36" FOR PIPE UP TO AND INCLUDING 12" NOMINAL DIAMETER.
   * I.D. PLUS 18" FOR PIPE LARGER THAN 12" NOMINAL DIAMETER.
2. EXCAVATIONS SHALL COMPLY WITH THE SAFETY STANDARDS DESCRIBED IN CHAPTER 296-155, PART N OF THE WAC.
3. SEE "BEDDING, BACKFILL AND COMPACTION" IN CHAPTER W5 OF THE ENGINEERING STANDARDS FOR ADDITIONAL CONSTRUCTION REQUIREMENTS.

TYPICAL TRENCH DETAIL

NTS

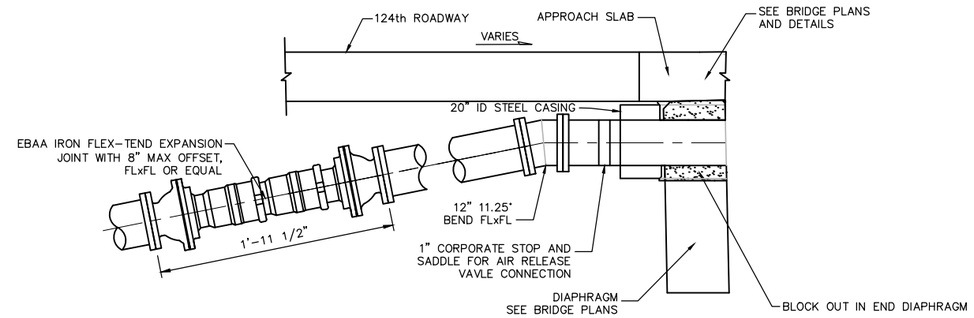

SOUTH ABUTMENT

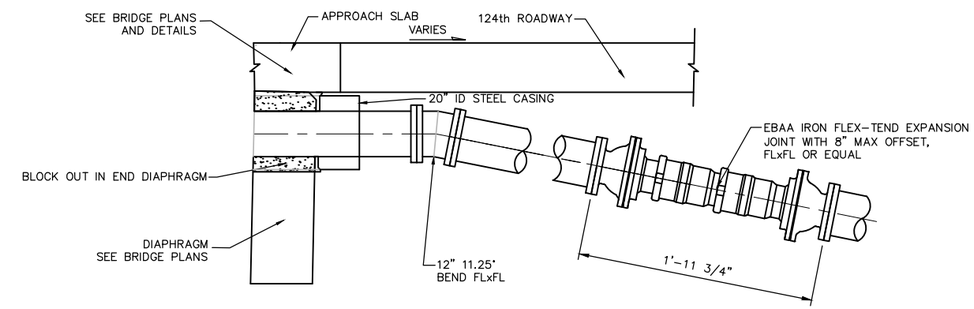

NORTH ABUTMENT

ABUTMENT DETAILS (A)

N.T.S.

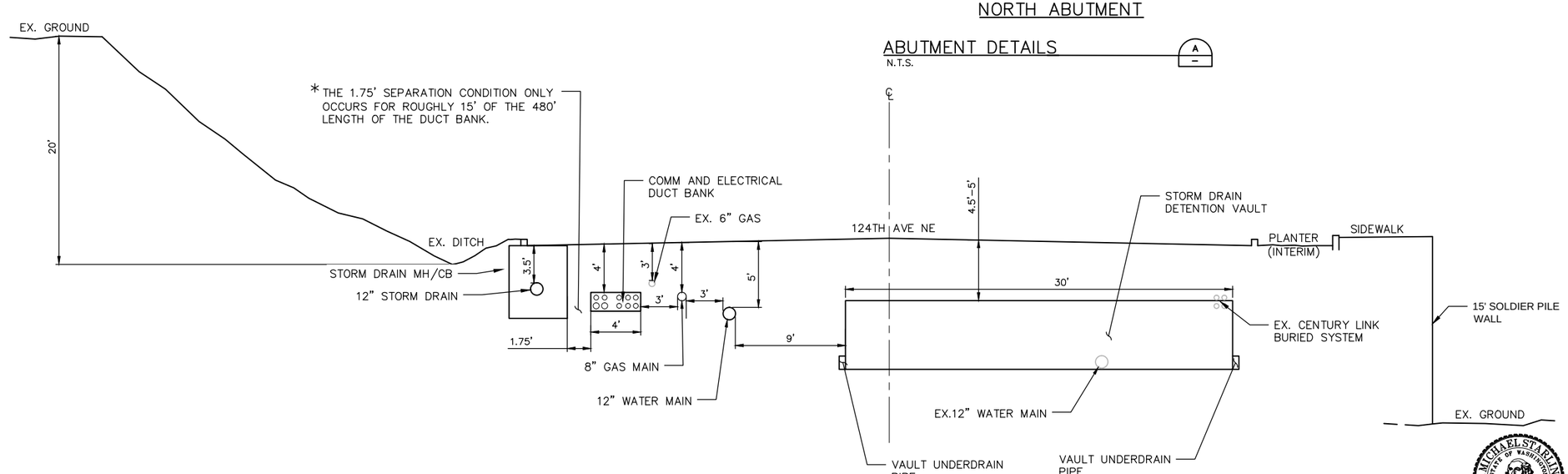

124TH AVE NE – UTILITY CROSS SECTION AT VAULT (B)

N.T.S.

NO.	DATE	BY	APPR.	REVISIONS

Approved By

TRANSPORTATION DESIGN MANAGER — DATE
M. ARAKELYAN
PROJECT MANAGER — DATE

M. AUSTIN — DESIGNED BY — DATE
J. FRYE — DRAWN BY — DATE
G. ROYCROFT — CHECKED BY — DATE

City of Bellevue
TRANSPORTATION DEPARTMENT

HDR

124th Ave NE - NE Spring Blvd to NE Ichigo Way

WATER MAIN DETAILS

SHEET NAME WMD1

SHT 94 OF 198

WATER MAIN AND UTILITY CONSTRUCTION SEQUENCE NOTES:

PRIOR TO BELLEVUE 124TH AVE NE ROADWAY PROJECT

1. PSE WILL RELOCATE GAS MAIN AND INSTALL TEMPORARY GAS MAIN AROUND BRIDGE. PSE WILL LEAVE A GAP IN THE NEW GAS MAIN IN FUTURE BRIDGE LOCATION FROM STA. 18+91 TO STA. 20+03 FOR BRIDGE CONSTRUCTION. DEMO EXISTING GAS WITHIN ALL OF THE PROJECT LIMITS FROM STA. 16+60 TO STA. 28+38 AFTER NEW GAS MAIN AND TEMPORARY BRIDGE BYPASS GAS MAIN HAS BEEN SUCCESSFULLY ACTIVATED.
2. PSE WILL CONSTRUCT JOINT UTILITY TRENCH (JUT) FROM STA. 21+80 TO STA. 29+15, JUT WILL CONTAIN CONDUITS FOR PSE, CENTURYLINK AND COMCAST. PSE AND CENTURYLINK WILL RELOCATE FACILITIES TO THE NEW JUT. DEMO EXISTING CENTURYLINK DUCT BANK ON EAST SIDE OF PROJECT FROM STA. 21+91 TO STA. 27+82 ENDING AT EXISTING CENTURYLINK VAULT, AFTER PSE AND CENTURYLINK RELOCATION.
3. CENTURYLINK WILL INSTALL TEMPORARY DUCT BANK AROUND BRIDGE. DEMO EXISTING CENTURYLINK DUCT BANK ON EAST SIDE OF PROJECT FROM EXISTING CENTURYLINK VAULT AT STA. 18+79 TO STA. 21+91 ENDING AT EXISTING VAULT INSTALLED IN STEP 2, AFTER TEMPORARY DUCT BANK INSTALLATION.

PREPARE FOR BRIDGE CONSTRUCTION

4. PSE WILL INSTALL TALLER POLES AND ELEVATE POWER LINES OVER BRIDGE AREA TO BE CLEAR OF EQUIPMENT USED DURING BRIDGE CONSTRUCTION. EXISTING WIRING WILL COME OFF LAST POLE AT STA. 20+85 VIA A RISER AND WILL RUN TO THE EXISTING PSE VAULT INSTALLED AS PART OF THE JOINT UTILITY TRENCH IN STEP 2. DEMO REMAINING EXISTING OVERHEAD POLES AND WIRES FROM STA. 20+85 TO STA. 28+03.
5. CONTRACTOR WILL INSTALL NEW WATER SERVICE FOR SAFEWAY BOTTLING PLANT.
6. CONTRACTOR WILL INSTALL TEMPORARY WATER MAIN AROUND BRIDGE.
7. CONTRACTOR WILL REMOVE ABANDONED UTILITIES (WATER, GAS, STORM, DUCT BANKS) WITHIN BRIDGE FOOTPRINT DURING BRIDGE CONSTRUCTION.

COMPLETE PROJECT UTILITIES CONSTRUCTION

8. CUT, CAP AND INSTALL TEMPORARY THRUST BLOCKS ON EXISTING WATER MAIN FOR STORM VAULT CONSTRUCTION. GAP IN WATER MAIN IS ALLOWED FOR NO MORE THAN 12 DAYS. DEMO EXISTING WATER MAIN FROM STA. 24+50 TO STA. 28+00.
9. INSTALL NEW WATER MAIN, PRESSURE TEST AND DISINFECT. CONVERT EXISTING WATER SERVICES TO NEW WATER MAIN.
10. PSE WILL INSTALL NEW GAS MAIN ACROSS BRIDGE AND ABANDON TEMPORARY BRIDGE BYPASS GAS MAIN.
11. INSTALL JOINT UTILITY TRENCH WITH CONDUIT FROM FRANCHISE UTILITIES FOR PSE, COMCAST AND CENTURYLINK. INSTALL ALL VAULTS PROVIDED BY FRANCHISE UTILITIES. DEMO EXISTING WATER MAIN FROM STA. 16+92 TO STA. 24+50.
12. INSTALL STORM DRAIN FOR PROJECT. DEMO EXISTING CENTURYLINK DUCT BANK ON EAST SIDE OF PROJECT STARTING FROM EXISTING CENTURYLINK VAULT AT STA. 16+86 TO STA. 18+79 INCLUDING EXISTING VAULT AT STA. 18+79.
13. FRANCHISE UTILITY COMPANIES TO COMPLETE UNDERGROUNDING WORK FOR NEW DUCT BANKS. PULL WIRING AND INSTALL ALL TRANSFORMERS AND CABLES NEEDED.
14. DEMO TEMPORARY WATER MAIN AROUND BRIDGE.

NO.	DATE	BY	APPR.	REVISIONS

Approved By

TRANSPORTATION DESIGN MANAGER — DATE

PROJECT MANAGER — DATE

M. STARLING — DESIGNED BY — DATE
C. WILCOX — DRAWN BY — DATE
P. FERRIER — CHECKED BY — DATE

City of Bellevue
TRANSPORTATION DEPARTMENT

HDR

124th Ave NE - NE Spring Blvd to NE Ichigo Way

WATER MAIN & UTILITY CONSTRUCTION SEQUENCING PLAN

SHEET NAME **WMN1**

SECTION 28, T. 25 N., R5E., W.M.
KING COUNTY

95% SUBMITTAL NOT FOR CONSTRUCTION

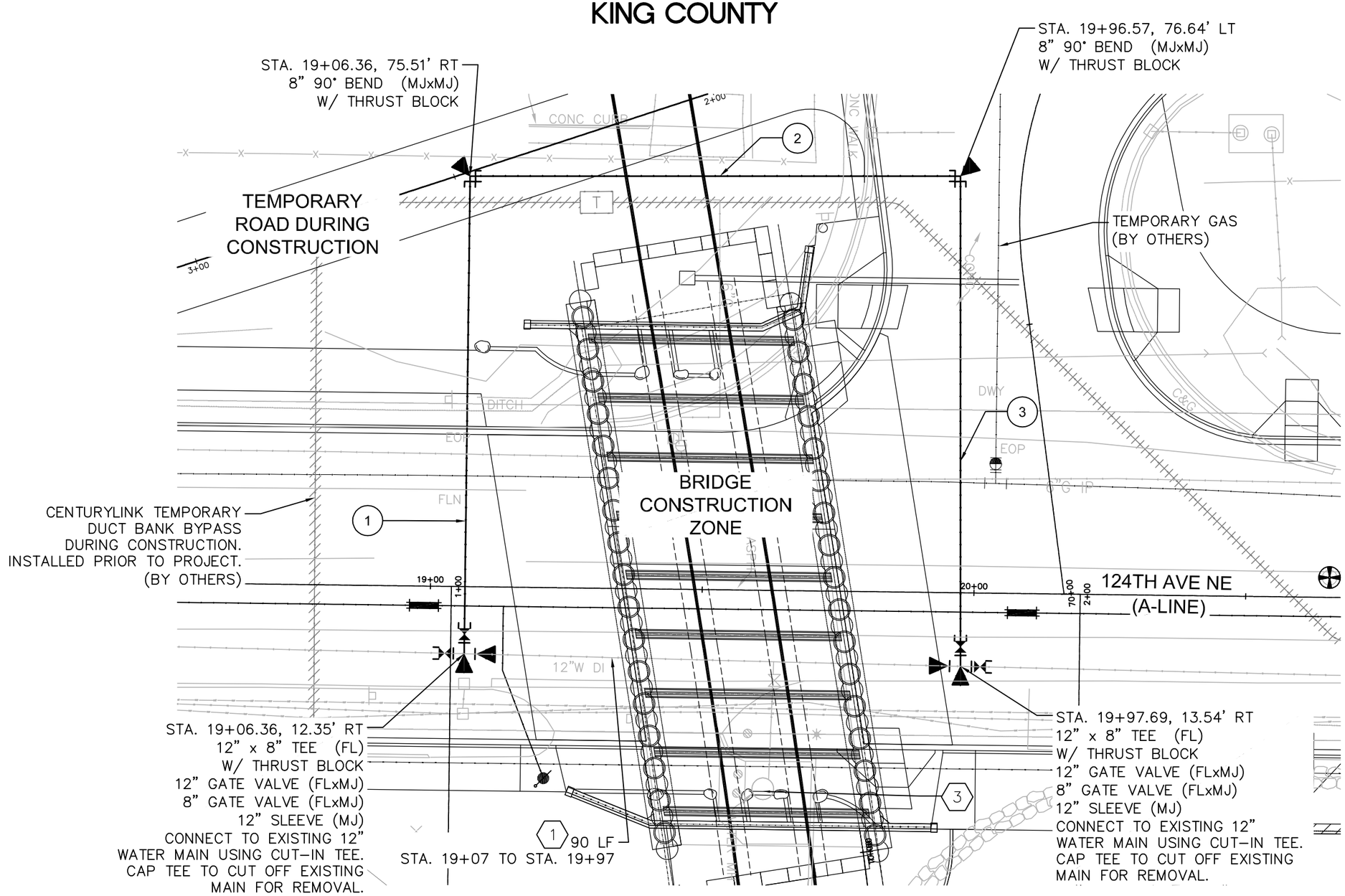

124th AVE NE - Bridge @ STA. 19+55

Temporary Water Main Bypass during Construction

GENERAL NOTES:

1. UNLESS OTHERWISE NOTED, ALL DIMENSIONS ARE IN FEET.
2. THE CONTRACTOR SHALL POTHOLE ALL POTENTIAL CONFLICTS WITH UTILITIES TO VERIFY THE HORIZONTAL AND VERTICAL LOCATION OF THE EXISTING UTILITIES. WHERE THE VERTICAL DISTANCE BETWEEN UTILITIES IS LESS THAN 6 INCHES, THE CONTRACTOR SHALL PROVIDE AN O.D. X O.D. X 2.5 INCH ETHAFOAM PAD PER THE SPECIAL PROVISIONS 7-08.3(2). THE O.D. DIMENSION IS BASED ON "THE LARGEST DIAMETER PIPE IN THE CROSSING CONFLICT", FOR THAT PARTICULAR LOCATION.
3. CALL UTILITIES UNDERGROUND LOCATION CENTER AT 1-800-424-5555 48 HOURS PRIOR TO CONSTRUCTION.
4. ALL WM PIPE SHALL BE DUCTILE IRON PIPE, CLASS 52.
5. STATIONS AND OFFSETS PROVIDED FOR TEES, BENDS, AND METERS ALL REFERENCE TO THE CENTER OF THE APPURTENANCE LOCATION.
6. THE CONTRACTOR SHALL SUBMIT A WATER MAIN LAY PLAN FOR ALL WATER MAIN SERVICE LATERALS LARGER THAN 2 INCHES IN SIZE TO THE ENGINEER AT LEAST 20 WORKING DAYS PRIOR TO PIPE INSTALLATION. THIS WORK SHALL INCLUDE ALL EQUIPMENT NECESSARY TO COMPLETE THE WORK.

LEGEND

	WATERMETER AND VAULT
	AIR & VACUUM RELEASE VALVE ASSY
	TEE & GATE VALVE
	FIRE HYDRANT
	FLEXIBLE EXPANSION JOINT
	REDUCER
	THRUST BLOCK
	PROPOSED CATCH BASIN TYPE 1
	PROPOSED CATCH BASIN TYPE 2
W	PROPOSED WATERMAIN
G	PROPOSED GAS
SD	PROPOSED STORM DRAIN
UGE	PROPOSED UNDERGROUND ELECTRICAL
UGT	PROPOSED TELECOM
X	EXISTING FENCE
G	EXISTING GAS
FO	EXISTING FIBER OPTIC
SD	EXISTING STORM DRAIN
SS	EXISTING SANITARY SEWER
W	EXISTING WATER LINE
OHT	EXISTING OVERHEAD TELEPHONE
OHTV	EXISTING OVERHEAD TELEVISION
OHE	EXISTING OVERHEAD ELECTRIC
UGT	EXISTING UNDERGROUND TELEPHONE
UGE	EXISTING UNDERGROUND ELECTRIC

CONSTRUCTION NOTES:

1. 87.9 LF OF 8" D.I.
2. 90.2 LF OF 8" D.I.
3. 90.2 LF OF 8" D.I.

REMOVAL NOTES:

1. REMOVE EXISTING 12" WM PIPE.
3. REMOVE EXISTING WATER SERVICE AND METER VAULT.

20 10 0 20 40
HORIZONTAL SCALE

KEY PLAN

NO.	DATE	BY	APPR.	REVISIONS

Approved By

TRANSPORTATION DESIGN MANAGER — DATE
M. ARAKELYAN
PROJECT MANAGER — DATE

M. AUSTIN — DESIGNED BY — DATE
J. FRYE — DRAWN BY — DATE
G. ROYCROFT — CHECKED BY — DATE

City of Bellevue
TRANSPORTATION DEPARTMENT

HDR

124th Ave NE - NE Spring Blvd to NE Ichigo Way

TEMPORARY UTILITY SERVICES DURING CONSTRUCTION

SHEET NAME TUS1

SHT 95 OF 198

SECTION 28, T. 25 N., R5E., W.M.
KING COUNTY

95% SUBMITTAL NOT FOR CONSTRUCTION

GENERAL NOTES:

1. UNLESS OTHERWISE NOTED, ALL DIMENSIONS ARE IN FEET.
2. SEE SHEET IRD1 FOR IRRIGATION LEGEND, ABBREVIATIONS, SCHEDULE AND NOTES.
3. SEE SHEETS IRD2–IRD3 FOR IRRIGATION DETAILS.
4. DRAWING IS SCHEMATIC. ACTUAL LOCATIONS MAY VARY DUE TO PLANT MATERIALS AND UTILITIES. IRRIGATION LATERAL LINES AND PRESSURE MAINLINES ARE SHOWN IN STREET AND SIDEWALK FOR CLARITY. ALL IRRIGATION PIPING SHALL BE LOCATED IN PLANTER STRIPS UNLESS OTHERWISE NOTED.

LEGEND:

SYMBOL	DESCRIPTION
	MP SIDE STRIP MPSS530 W/ HUNTER PRS40–12–CV
	MP RIGHT STRIP MPRCS515 W/ HUNTER PRS40–12–CV
	MP LEFT STRIP MPLCS515 W/ HUNTER PRS40–12–CV
Ⓑ	TREE ROOT WATERING SYSTEM
	SLEEVE UNDER PAVEMENT W/ SIZE
	LATERAL LINE
	PRESSURE MAINLINE
IRRG	IRRIGATION POINT OF CONNECTION

PIPE SIZING CHART

HYDRAULIC DESIGN & PIPE SIZING	
FLOW	PIPE SIZE
1–8 GPM	¾" SCHD. 40 PVC
9–13 GPM	1" SCHD. 40 PVC
14–22 GPM	1¼" SCHD. 40 PVC
23–30 GPM	1½" SCHD. 40 PVC
31–50 GPM	2" SCHD 40 PVC

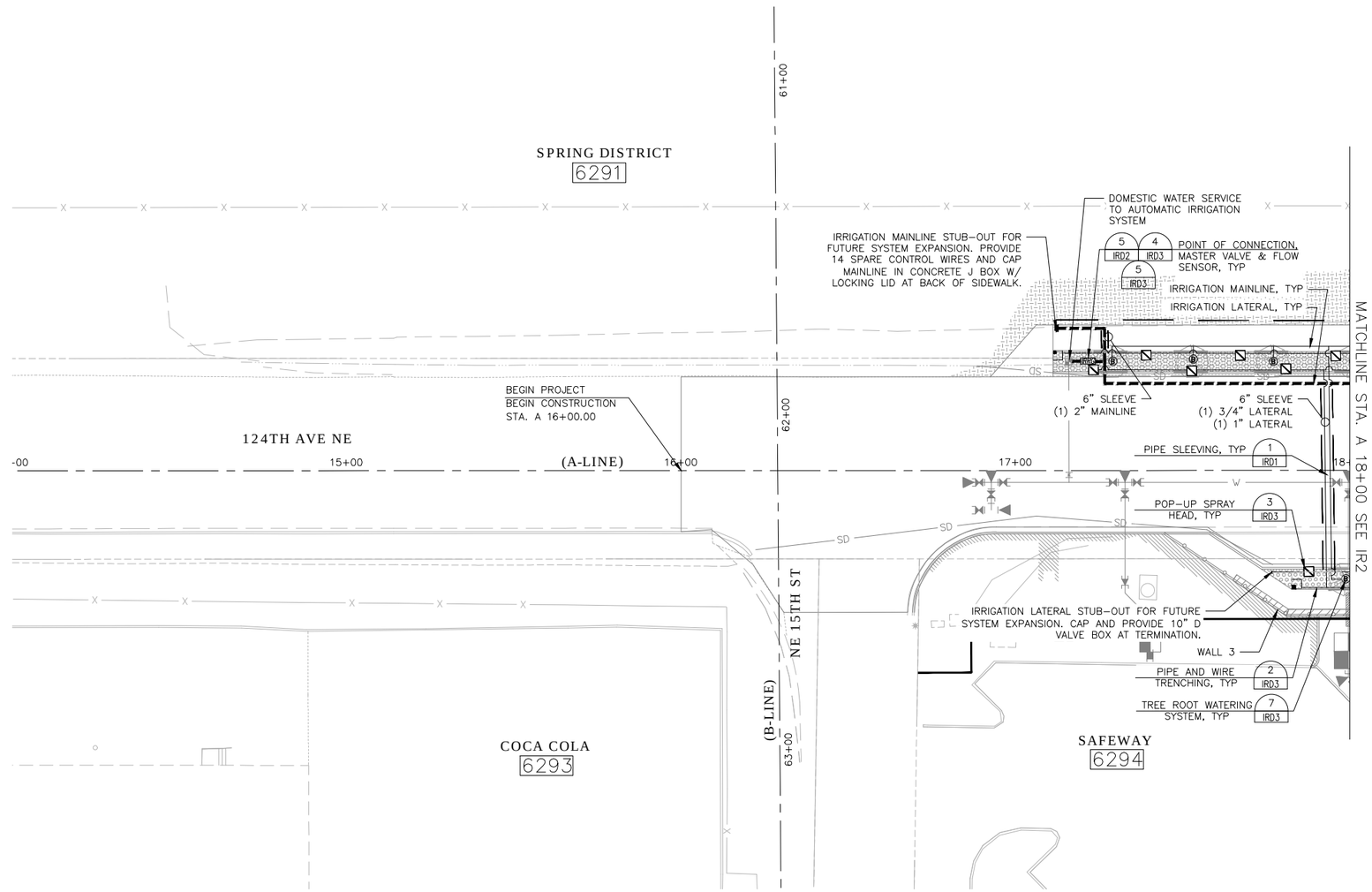

2 3 4

KEY PLAN

STATE OF WASHINGTON LICENSED LANDSCAPE ARCHITECT

MATTHEW C. GURRAD
LICENSE NO. 1094
EXPIRES ON _____

20 10 0 20 40
SCALE

NO.	DATE	BY	APPR.	REVISIONS

Approved By

TRANSPORTATION DESIGN MANAGER — DATE
M. ARAKELYAN
PROJECT MANAGER — DATE

M. GURRAD — DESIGNED BY — DATE
C. WILCOX — DRAWN BY — DATE
G. LAI — CHECKED BY — DATE

City of Bellevue
TRANSPORTATION DEPARTMENT

HDR

124th Ave NE - NE Spring Blvd to NE Ichigo Way

IRRIGATION PLAN
BEGIN TO STA. A 18+00

SHEET NAME **IR1**

SHT 96 OF 198

SECTION 28, T. 25 N., R5E., W.M.
KING COUNTY

95% SUBMITTAL NOT FOR CONSTRUCTION

GENERAL NOTES:

1. UNLESS OTHERWISE NOTED, ALL DIMENSIONS ARE IN FEET.
2. SEE SHEET IRD1 FOR IRRIGATION LEGEND, ABBREVIATIONS, SCHEDULE AND NOTES.
3. SEE SHEETS IRD2–IRD3 FOR IRRIGATION DETAILS.
4. DRAWING IS SCHEMATIC. ACTUAL LOCATIONS MAY VARY DUE TO PLANT MATERIALS AND UTILITIES. IRRIGATION LATERAL LINES AND PRESSURE MAINLINES ARE SHOWN IN STREET AND SIDEWALK FOR CLARITY. ALL IRRIGATION PIPING SHALL BE LOCATED IN PLANTER STRIPS UNLESS OTHERWISE NOTED.

LEGEND:

SYMBOL	DESCRIPTION
	MP SIDE STRIP MPSS530 W/ HUNTER PRS40–12–CV
	MP RIGHT STRIP MPRCS515 W/ HUNTER PRS40–12–CV
	MP LEFT STRIP MPLCS515 W/ HUNTER PRS40–12–CV
B	TREE ROOT WATERING SYSTEM
	SLEEVE UNDER PAVEMENT W/ SIZE
	LATERAL LINE
	PRESSURE MAINLINE
	IRRIGATION CONTROL WIRE
	AUTOMATIC CONTROL VALVE
	AUTOMATIC CONTROL VALVE W/ FILTER
C	AUTOMATIC IRRIGATION CONTROLLER & PEDESTAL
IRRG	IRRIGATION POINT OF CONNECTION
	MANUAL DRAIN VALVE

PIPE SIZING CHART

HYDRAULIC DESIGN & PIPE SIZING

FLOW	PIPE SIZE
1–8 GPM	¾" SCHD. 40 PVC
9–13 GPM	1" SCHD. 40 PVC
14–22 GPM	1¼" SCHD. 40 PVC
23–30 GPM	1½" SCHD. 40 PVC
31–50 GPM	2" SCHD 40 PVC

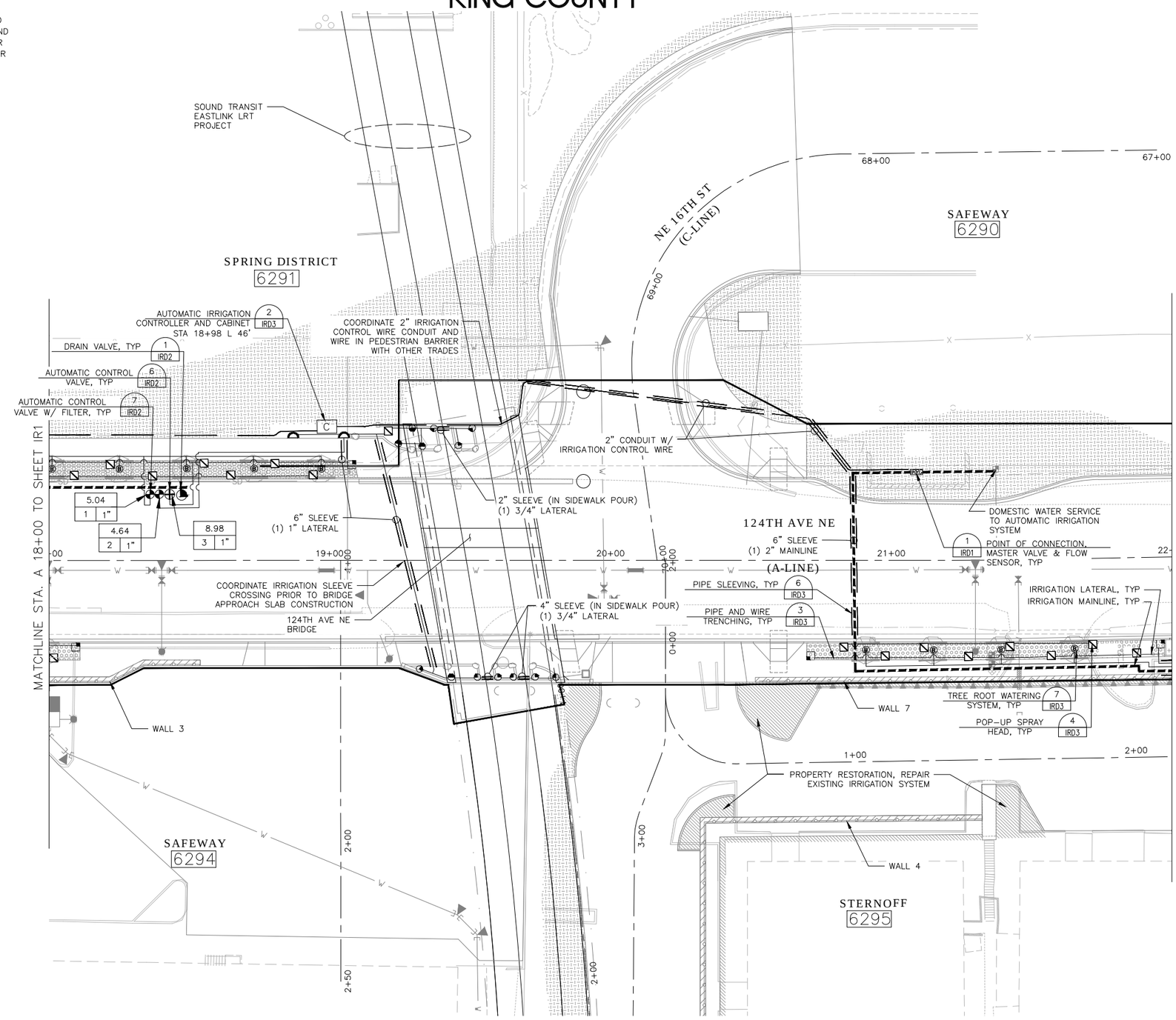

1 | 2 | 3 | 4

KEY PLAN

20 10 0 20 40
SCALE

STATE OF WASHINGTON LICENSED LANDSCAPE ARCHITECT

MATTHEW C. GURRAD
LICENSE NO. 1094
EXPIRES ON _____

NO.	DATE	BY	APPR.	REVISIONS

Approved By

TRANSPORTATION DESIGN MANAGER — DATE
M. ARAKELYAN
PROJECT MANAGER — DATE

M. GURRAD — DESIGNED BY — DATE
C. WILCOX — DRAWN BY — DATE
G. LAI — CHECKED BY — DATE

City of Bellevue
TRANSPORTATION DEPARTMENT

124th Ave NE - NE Spring Blvd to NE Ichigo Way

IRRIGATION PLAN
STA. A 18+00 TO STA. A 22+00

SHEET NAME **IR2**

SHT 97 OF 198

SECTION 28, T. 25 N., R5E., W.M.
KING COUNTY

95% SUBMITTAL NOT FOR CONSTRUCTION

GENERAL NOTES:

1. UNLESS OTHERWISE NOTED, ALL DIMENSIONS ARE IN FEET.
2. SEE SHEET IRD1 FOR IRRIGATION LEGEND, ABBREVIATIONS, SCHEDULE AND NOTES.
3. SEE SHEETS IRD2–IRD3 FOR IRRIGATION DETAILS.
4. DRAWING IS SCHEMATIC. ACTUAL LOCATIONS MAY VARY DUE TO PLANT MATERIALS AND UTILITIES. IRRIGATION LATERAL LINES AND PRESSURE MAINLINES ARE SHOWN IN STREET AND SIDEWALK FOR CLARITY. ALL IRRIGATION PIPING SHALL BE LOCATED IN PLANTER STRIPS UNLESS OTHERWISE NOTED.

LEGEND:

SYMBOL	DESCRIPTION
	MP ROTATOR MP800SR 90–210 W/ HUNTER PRS40–15–CV
	MP ROTATOR MP800SR 90–210 W/ HUNTER PRS40–15–CV
	MP ROTATOR MP1000 90–210 W/ HUNTER PRS40–15–CV
	MP ROTATOR MP1000 90–210 W/ HUNTER PRS40–15–CV
	MP ROTATOR MP1000 90–210 W/ HUNTER PRS40–15–CV
	MP ROTATOR MP2000 360 W/ HUNTER PRS40–15–CV
	MP ROTATOR MP3000 90–210 W/ HUNTER PRS40–15–CV
	MP SIDE STRIP MPSS530 W/ HUNTER PRS40–12–CV
	MP RIGHT STRIP MPRCS515 W/ HUNTER PRS40–12–CV
	MP LEFT STRIP MPLCS515 W/ HUNTER PRS40–12–CV
	TREE ROOT WATERING SYSTEM
	SLEEVE UNDER PAVEMENT W/ SIZE
	LATERAL LINE
	PRESSURE MAINLINE
	QUICK COUPLER VALVE
	AUTOMATIC CONTROL VALVE
	AUTOMATIC CONTROL VALVE W/ FILTER
CS	CURB STOP VALVE
	MANUAL DRAIN VALVE

PIPE SIZING CHART

HYDRAULIC DESIGN & PIPE SIZING	
FLOW	PIPE SIZE
1–8 GPM	¾" SCHD. 40 PVC
9–13 GPM	1" SCHD. 40 PVC
14–22 GPM	1¼" SCHD. 40 PVC
23–30 GPM	1½" SCHD. 40 PVC
31–50 GPM	2" SCHD 40 PVC

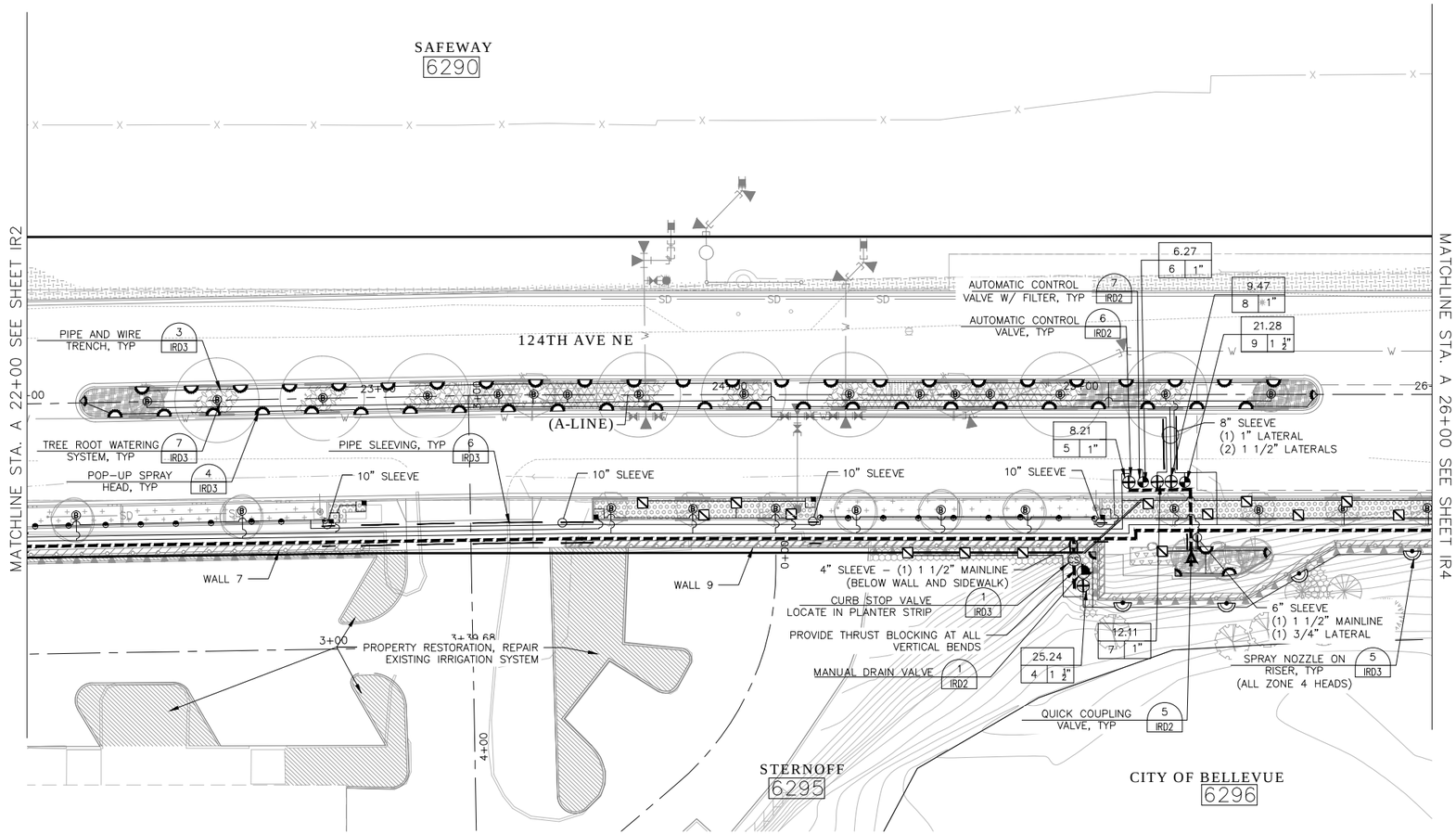

1 2 4

KEY PLAN

STATE OF WASHINGTON LICENSED LANDSCAPE ARCHITECT

MATTHEW C. GURRAD
LICENSE NO. 1094
EXPIRES ON _____

20 10 0 20 40
SCALE

NO.	DATE	BY	APPR.	REVISIONS

Approved By

TRANSPORTATION DESIGN MANAGER — DATE
M. ARAKELYAN
PROJECT MANAGER — DATE

M. GURRAD — DESIGNED BY — DATE
C. WILCOX — DRAWN BY — DATE
G. LAI — CHECKED BY — DATE

City of Bellevue
TRANSPORTATION DEPARTMENT

HDR

124th Ave NE - NE Spring Blvd to NE Ichigo Way

IRRIGATION PLAN
STA. A 22+00 TO STA. A 26+00

SHEET NAME **IR3**

SHT 98 OF 198

SECTION 28, T. 25 N., R5E., W.M.
KING COUNTY

95% SUBMITTAL NOT FOR CONSTRUCTION

GENERAL NOTES:

1. UNLESS OTHERWISE NOTED, ALL DIMENSIONS ARE IN FEET.
2. SEE SHEET IRD1 FOR IRRIGATION LEGEND, ABBREVIATIONS, SCHEDULE AND NOTES.
3. SEE SHEETS IRD2–IRD3 FOR IRRIGATION DETAILS.
4. DRAWING IS SCHEMATIC. ACTUAL LOCATIONS MAY VARY DUE TO PLANT MATERIALS AND UTILITIES. IRRIGATION LATERAL LINES AND PRESSURE MAINLINES ARE SHOWN IN STREET AND SIDEWALK FOR CLARITY. ALL IRRIGATION PIPING SHALL BE LOCATED IN PLANTER STRIPS UNLESS OTHERWISE NOTED.

LEGEND:

SYMBOL	DESCRIPTION
	MP ROTATOR MP1000 90–210 W/ HUNTER PRS40–15–CV
	MP ROTATOR MP1000 90–210 W/ HUNTER PRS40–15–CV
	MP ROTATOR MP1000 90–210 W/ HUNTER PRS40–15–CV
	MP ROTATOR MP2000 360 W/ HUNTER PRS40–15–CV
	MP ROTATOR MP3000 90–210 W/ HUNTER PRS40–15–CV
	MP SIDE STRIP MPSS530 W/ HUNTER PRS40–12–CV
	MP RIGHT STRIP MPRCS515 W/ HUNTER PRS40–12–CV
	MP LEFT STRIP MPLCS515 W/ HUNTER PRS40–12–CV
	TREE ROOT WATERING SYSTEM
	LATERAL LINE
	PRESSURE MAINLINE

PIPE SIZING CHART

HYDRAULIC DESIGN & PIPE SIZING	
FLOW	PIPE SIZE
1–8 GPM	¾" SCHD. 40 PVC
9–13 GPM	1" SCHD. 40 PVC
14–22 GPM	1¼" SCHD. 40 PVC
23–30 GPM	1½" SCHD. 40 PVC
31–50 GPM	2" SCHD 40 PVC

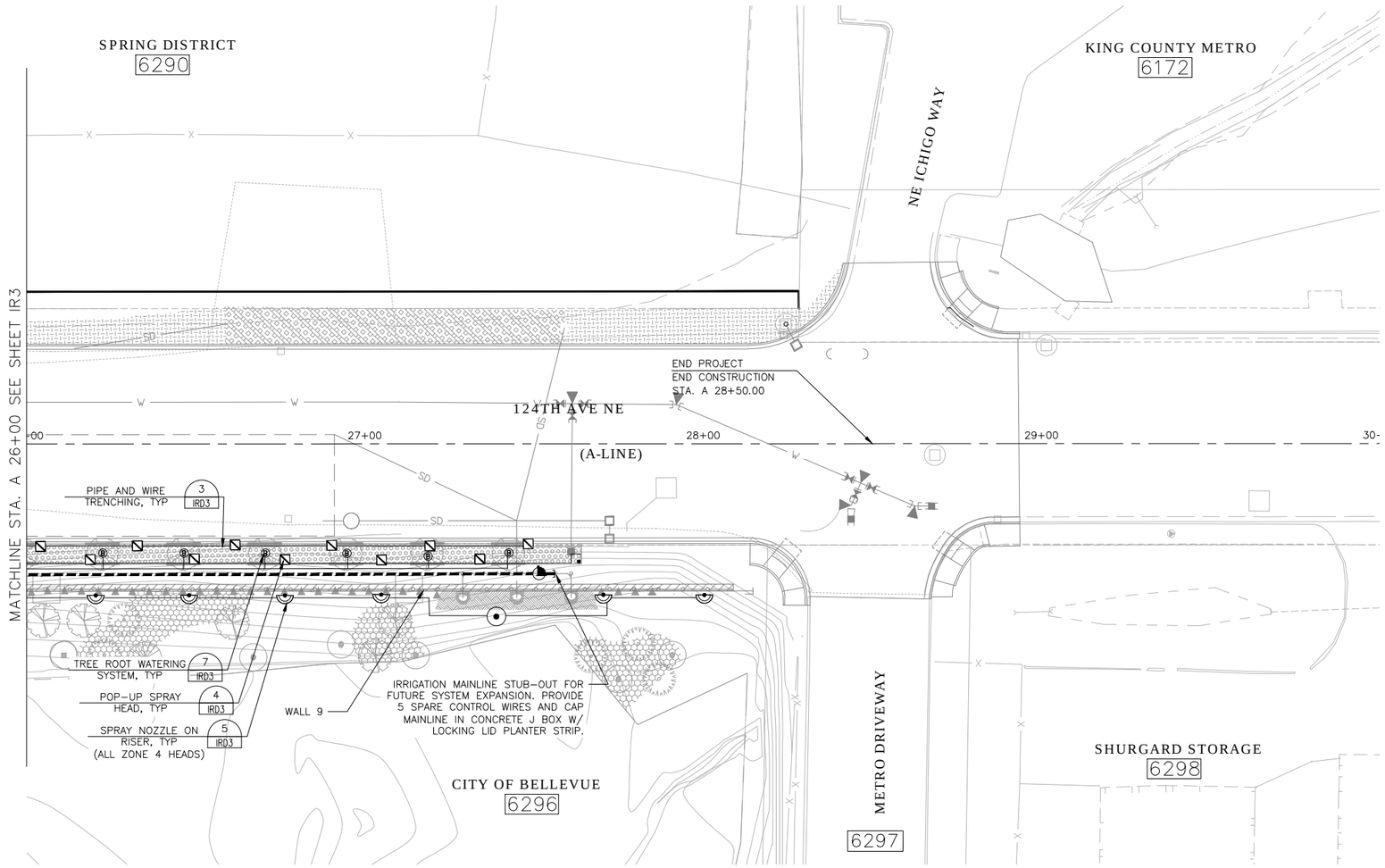

1 2 3

KEY PLAN

20 10 0 20 40
SCALE

STATE OF WASHINGTON LICENSED LANDSCAPE ARCHITECT

MATTHEW C. GURRAD
LICENSE NO. 1094
EXPIRES ON _____

NO.	DATE	BY	APPR.	REVISIONS

Approved By

TRANSPORTATION DESIGN MANAGER — DATE
M. ARAKELYAN
PROJECT MANAGER — DATE

M. GURRAD — DESIGNED BY — DATE
C. WILCOX — DRAWN BY — DATE
G. LAI — CHECKED BY — DATE

City of Bellevue
TRANSPORTATION DEPARTMENT

124th Ave NE - NE Spring Blvd to NE Ichigo Way

IRRIGATION PLAN
STA. A 26+00 TO END

SHEET NAME **IR4**

SHT 99 OF 198

IRRIGATION SCHEDULE

POP-UP SPRAY HEADS -OR- (4 IRD3) (5 IRD3) (7 IRD3)
SPRAY NOZZLE ON RISER -OR-
TREE ROOT WATERING SYSTEM

SYMBOL	DESCRIPTION	RADIUS	PRESSURE	GPM + 20%
	MP ROTATOR MP800SR 90-210 W/ HUNTER PRS40-15-CV	8'	40	0.19
	MP ROTATOR MP800SR 90-210 W/ HUNTER PRS40-15-CV	8'	40	0.38
	MP ROTATOR MP1000 90-210 W/ HUNTER PRS40-15-CV	14'	40	0.23
	MP ROTATOR MP1000 90-210 W/ HUNTER PRS40-15-CV	14'	40	0.44
	MP ROTATOR MP2000 360 W/ HUNTER PRS40-15-CV	20'	40	1.62
	MP ROTATOR MP3000 90-210 W/ HUNTER PRS40-15-CV	30'	40	2.18
	MP SIDE STRIP MPSS530 W/ HUNTER PRS40-12-CV	5'X30'	40	0.53
	MP SIDE STRIP MPRCS515 W/ HUNTER PRS40-12-CV	5'X15'	40	0.26
	MP RIGHT STRIP MPRCS515 W/ HUNTER PRS40-12-CV	5'X15'	40	0.26
	MP LEFT STRIP MPLCS515 W/ HUNTER PRS40-12-CV	5'X15'	40	0.26
B	TREE ROOT WATERING SYSTEM (2) RAINBIRD RWS-M-B-1401	-	30	0.28 (EA EMITTER)

(6 IRD3) IRRIGATION SLEEVING (SCHED. 40 PVC, 6" DIA UNLESS LABELED OTHERWISE)

(3 IRD3) LATERAL LINE (SCHEDULE 40 PVC) SEE LATERAL PIPE SIZE LEGEND FOR SIZE

(3 IRD3) MAINLINE, (SCHED. 40 PVC) W/ SIZE

(5 IRD2) QUICK COUPLING VALVES AND COUPLERS. 1" BUCKNER QB5 LRC-10 QUICK COUPLING VALVE

VALVE CIRCUIT NO. — GPM / VALVE SIZE

(6 IRD2) BRASS AUTOMATIC CONTROL VALVES : WEATHERMATIC 8200 SERIES (SIZE PER AUTOMATIC CONTROL VALVE SCHEDULE)

(7 IRD2) BRASS AUTOMATIC CONTROL VALVE W/ FILTER : WEATHERMATIC 8200 SERIES W/ SLV-SPBFG-100 WYE FILTER (SIZE PER AUTOMATIC CONTROL VALVE SCHEDULE)

(4 IRD2) BRASS GATE VALVE, RED AND WHITE, SIZE SHALL MATCH MAINLINE SIZE

(6 IRD2) C — AUTOMATIC CONTROLLER & ENCLOSURE - CA5-WT3-24/LPP-347/EMP-MPE ENCLOSURE WITH 8 STATION CONTROLLER SUPPLIED BY HD FOWLDER. CONTRACTOR SHALL COORDINATE LOCATION W/ ENG. PRIOR TO INSTALLATION. INSTALL PER MFR'S RECOMMENDATIONS.

(1 IRD1) IRRG — IRRIGATION POINT OF CONNECTION

(1 IRD3) CS — CURB STOP VALVE, MUELLER ORISEAL II

(3 IRD2) DCVA — 1½" CROSS CONNECTION CONTROL DEVICE (DOUBLE CHECK VALVE) WILKINS 950 XLU

(1 IRD1) 1½ " IRRIGATION WATER METER

(3 IRD2) 1½" PRESSURE REGULATING VALVE - WILKINS 600 SERIES PRV (SET TO 80 PSI)

(1 IRD2) ¾" DRAIN VALVE. PROVIDE OWNER W/ TWO (2) VALVE KEYS, MUELLER

(2 IRD2) 1½" FLOW SENSOR - DATA INDUSTRIAL IR-220P

(2 IRD2) 1½" MASTER AUTOMATIC CONTROL VALVE - WEATHERMATIC 8,200 SERIES (NORMALLY CLOSED)

AUTOMATIC CONTROL VALVE SCHEDULE

VALVE #	SIZE	GPM
1	1"	5.04
2	1"	4.64
3	1"	8.98
4	1 ½"	25.24
5	1"	8.21
6	1"	6.27
7	1"	12.11
8	1"	9.47
9	1 ½"	21.28

LATERAL PIPE SIZE LEGEND

3/4" — 1 ¼" — 2" — 1" — 1 ½"

ABBREVIATIONS

#	NUMBER	ENG	ENGINEER	PSI	POUNDS PER SQUARE INCH
%	PERCENTAGE	EX	EXISTING	PVC	POLYVINYL CHLORIDE
&	AND	GPM	GALLONS PER MINUTE	PRV	PRESSURE REGULATING VALVE
@	AT	HT	HEIGHT	ROW	RIGHT OF WAY
APPROX	APPROXIMATE	IRRIG	IRRIGATION	SIM	SIMILAR
℄	CENTER LINE	LF	LINEAR FEET	SPECS	SPECIFICATIONS
CONC	CONCRETE	MAX	MAXIMUM	STA	STATION
CY	CUBIC YARDS	MRF'S	MANUFACTURERS	TYP	TYPICAL
DIA	DIAMETER	MIN	MINIMUM	WM	WATER METER
DWG/ DWGS	DRAWING(S)	POC	POINT OF CONNECTION	W/	WITH

IRRIGATION NOTES

1. LOCATE QUICK COUPLING VALVE & AUTOMATIC CONTROL VALVES IN SHRUB/GROUNDCOVER AREAS AT POINT OF EASY ACCESS. ENGINEER TO REVIEW & APPROVE FINAL LOCATION OF ALL QUICK COUPLERS & AUTOMATIC CONTROL VALVES PRIOR TO INSTALLATION.
2. IRRIGATION SLEEVE, PIPE & TUBING SHALL BE ADJUSTED IN THE FIELD TO AVOID CONFLICTS WITH EXISTING SITE CONDITIONS, PLANT MATERIALS & ANY OTHER ITEMS DEEMED NECESSARY BY THE ENGINEER.
3. ESTIMATED STATIC P.S.I. ALONG NEW WATER MAIN AT IRRIGATION METER IS 95 PSI AND 65 GPM PROVIDED BY CITY OF BELLEVUE UTILITIES ON 1/24/2014. PRIOR TO INSTALLATION OF IRRIGATION SYSTEM, CONTRACTOR SHALL FIELD VERIFY EXISTING P.S.I. NOTIFY ENGINEER OF ANY DISCREPANCIES BETWEEN THE DESIGN P.S.I. & EXISTING P.S.I. PRIOR TO PROCEEDING WITH WORK.
4. SYSTEM DESIGNED TO 90 PSI AT IRRIGATION METER, 50 PSI AT AUTOMATIC CONTROL VALVE.
5. IRRIGATION CONTRACTOR SHALL COORDINATE IRRIGATION SLEEVE LOCATIONS WITH GENERAL CONTRACTOR.
6. DRAWING IS SCHEMATIC. ACTUAL LOCATIONS MAY VARY DUE TO PLANT MATERIALS, UTILITIES OR EXISTING CONDITIONS. IRRIGATION LATERAL LINES OR PRESSURE MAINLINES ARE SHOWN DIAGRAMMATICALLY. PLACEMENT OF LINES SHOULD BE ASSUMED TO BE IN PLANTING AREAS OR IN CONDUITS. EXACT LOCATION OF ALL EQUIPMENT SHALL BE FIELD VERIFIED TO AVOID CONFLICTS. HEAD PLACEMENT IS NOT DIAGRAMMATIC AND SHALL BE PLACED WITHIN +/- 6" OF LOCATION SHOWN ON PLANS.
7. ALL IRRIGATION HEAD NOZZLES SHALL BE MATCHED PRECIPITATION RATE (MPR) NOZZLES.
8. CONTRACTOR IS RESPONSIBLE FOR LOCATING UTILITIES PRIOR TO BEGINNING CONSTRUCTION.
9. ALL IRRIGATION SLEEVE TO BE STAKED IN THE FIELD & LOCATED ON DIMENSIONED "AS-BUILT" DRAWING TO ALLOW FUTURE LOCATION & USE.
10. AIR BLOW IRRIGATION SYSTEM THROUGH QUICK COUPLERS & DRAIN/SHUT-OFF VALVES TO WINTERIZE IRRIGATION SYSTEM TO BE INCLUDED IN FIRST YEAR PLANT ESTABLISHMENT PERIOD.
11. INSTALL LATERAL LINE AND/OR MAINLINE INSIDE SLEEVE PRIOR TO PAVING. FIELD VERIFY SLEEVE INSTALLATION LOCATIONS W/ ENGINEER PRIOR TO BEGINNING CONSTRUCTION.
12. PROVIDE TWO SYSTEM WIDE SPARE IRRIGATION CONTROL WIRES TO ALL AUTOMATIC CONTROL VALVE BOXES IN ADDITION TO THOSE NOTED ON DWG'S.
13. EXISTING IRRIGATION SYSTEMS LOCATED BACK OF SIDEWALK MAY BE IMPACTED BY CONSTRUCTION. CONTRACTOR SHALL RESTORE EXISTING IRRIGATION SYSTEMS IMPACTED BY CONSTRUCTION TO PRE-CONSTRUCTION CONDITION, PER "PROPERTY RESTORATION" FORCE ACCOUNT. SEE SPECS. FOR APPROXIMATE LOCATION OF EXISTING IRRIGATION SYSTEMS.

    124TH AVE NE
    1) STA 17+50 RT
    2) STA 19+75 TO 23+50 RT
    3) STA 28+20 RT

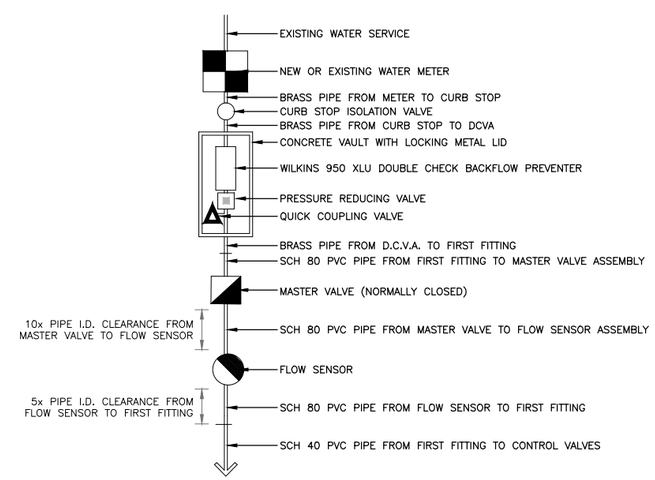

1 POINT OF CONNECTION SHEMATIC
NOT TO SCALE

STATE OF WASHINGTON LICENSED LANDSCAPE ARCHITECT

MATTHEW C. GURRAD
LICENSE NO. 1094
EXPIRES ON _____

NO.	DATE	BY	APPR.	REVISIONS

Approved By
TRANSPORTATION DESIGN MANAGER — DATE
M. ARAKELYAN
PROJECT MANAGER — DATE

M. GURRAD — DESIGNED BY — DATE
S. HOEBER — DRAWN BY — DATE
G. LAI — CHECKED BY — DATE

City of Bellevue
TRANSPORTATION DEPARTMENT

HDR

124th Ave NE - NE Spring Blvd to NE Ichigo Way

IRRIGATION GENERAL NOTES, SCHEDULE, DETAILS, LEGEND AND ABBREVIATIONS

SHEET NAME IRD1

95% SUBMITTAL NOT FOR CONSTRUCTION

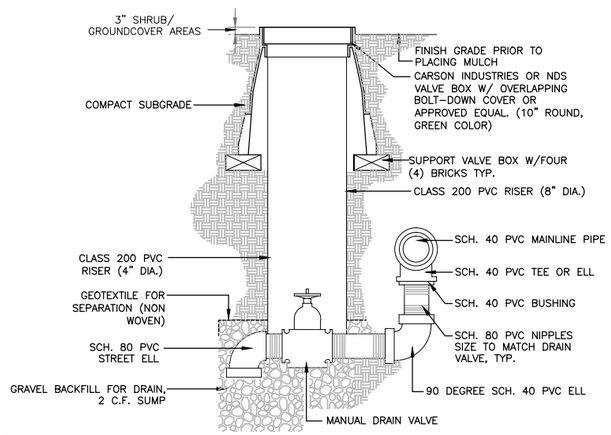

1 MANUAL DRAIN VALVE

NOT TO SCALE

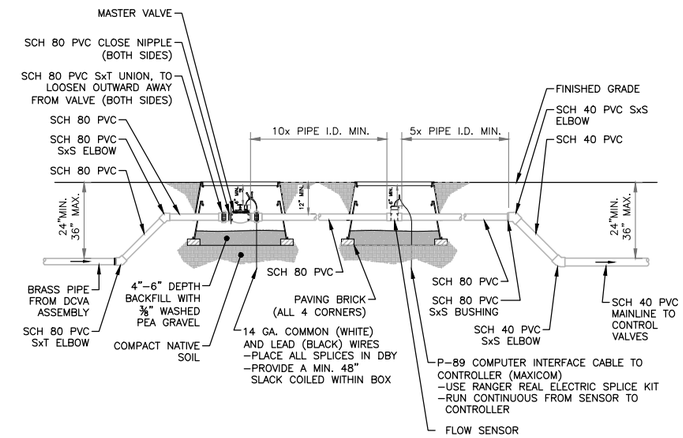

2 MASTER VALVE AND FLOW SENSOR

1/2" = 1'-0"

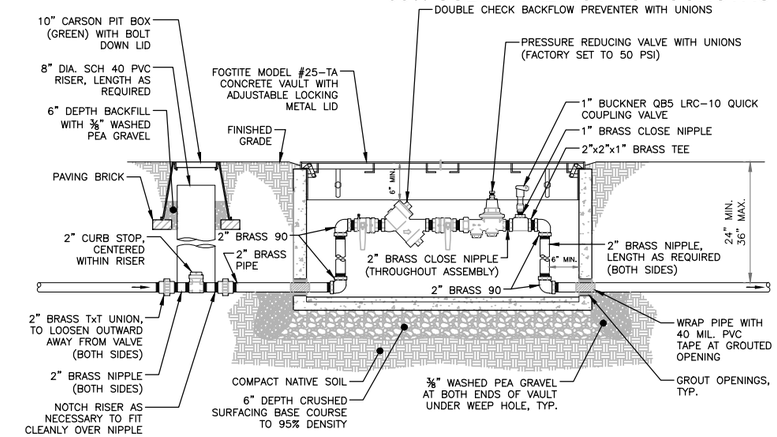

3 DOUBLE CHECK VALVE ASSEMBLY IN VAULT

3/4" = 1'-0"

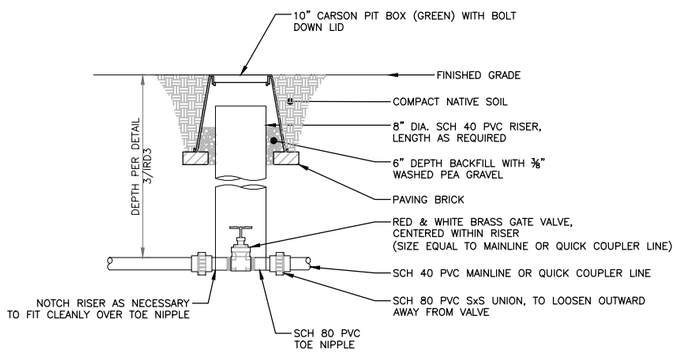

4 GATE VALVE

1" = 1'-0"

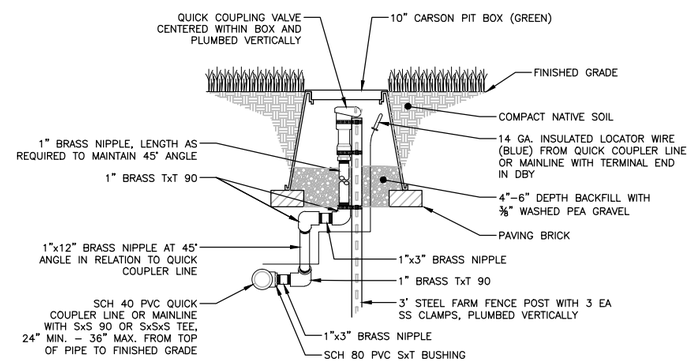

5 QUICK COUPLER VALVE

1" = 1'-0"

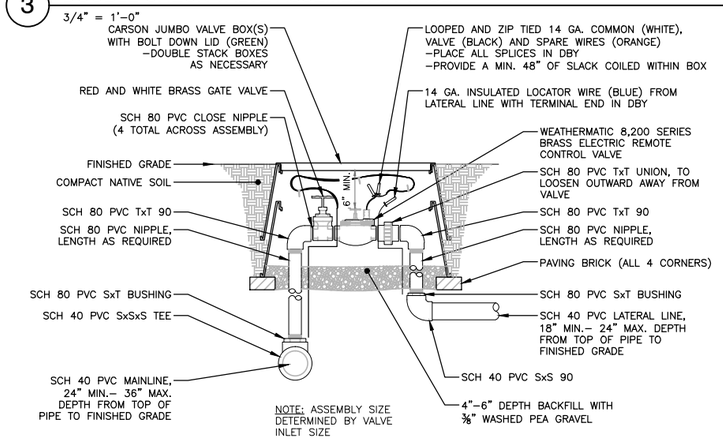

6 AUTOMATIC CONTROL VALVE

NOT TO SCALE

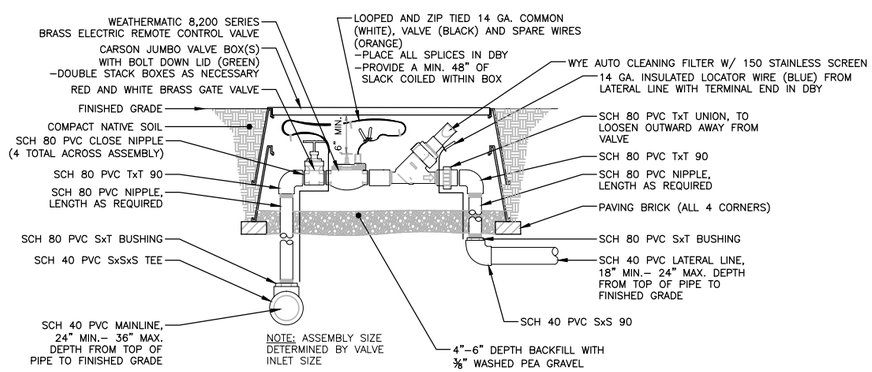

7 AUTOMATIC CONTROL VALVE W/ FILTER

NOT TO SCALE

STATE OF WASHINGTON LICENSED LANDSCAPE ARCHITECT

MATTHEW C. GURRAD
LICENSE NO. 1094
EXPIRES ON _____

NO.	DATE	BY	APPR.	REVISIONS

Approved By

TRANSPORTATION DESIGN MANAGER — DATE
M. ARAKELYAN
PROJECT MANAGER — DATE

M. GURRAD — DESIGNED BY — DATE
S. HOEBER — DRAWN BY — DATE
G. LAI — CHECKED BY — DATE

City of Bellevue
TRANSPORTATION DEPARTMENT

HDR

124th Ave NE - NE Spring Blvd to NE Ichigo Way

IRRIGATION DETAILS

SHEET NAME IRD2

SHT 101 OF 198

95% SUBMITTAL NOT FOR CONSTRUCTION

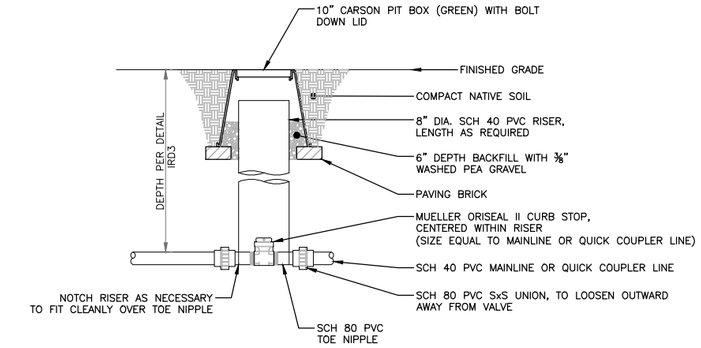

1 CURB STOP VALVE

1" = 1'-0"

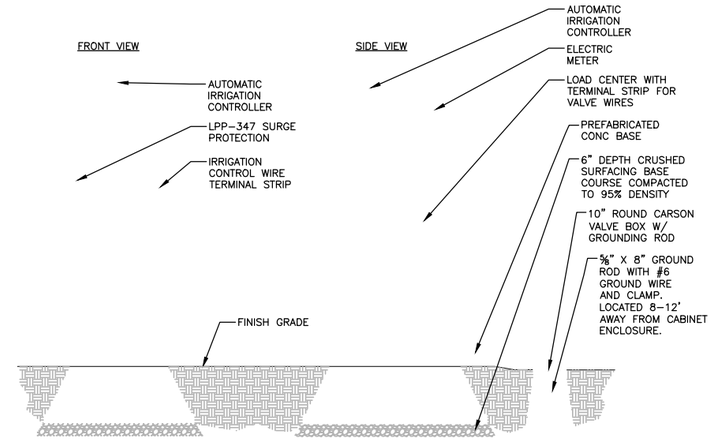

2 AUTOMATIC IRRIGATION CONTROLLER AND CABINET

NOT TO SCALE

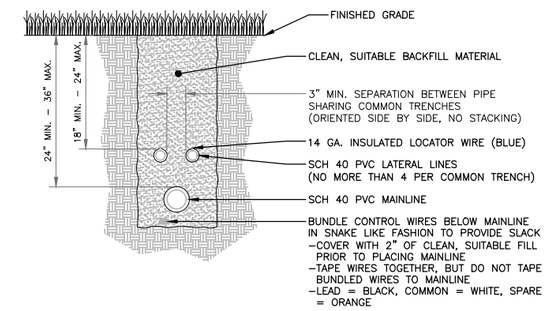

3 PIPE AND WIRE TRENCH

1" = 1'-0"

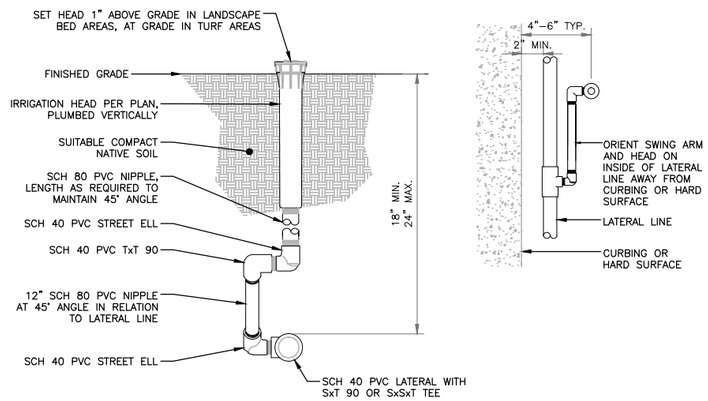

4 POP-UP SPRAY HEAD

1 1/2" = 1'-0"

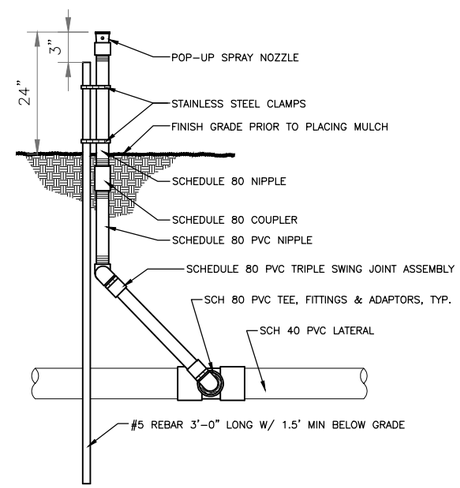

5 SPRAY NOZZLE ON RISER

NOT TO SCALE

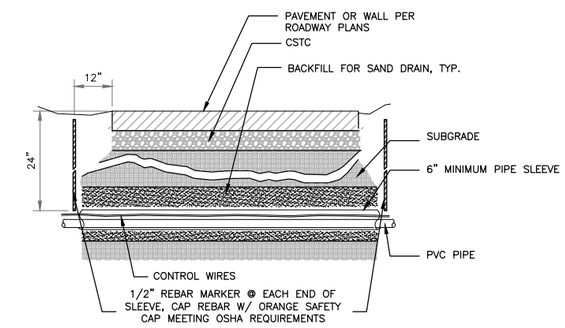

6 IRRIGATION SLEEVING

NOT TO SCALE

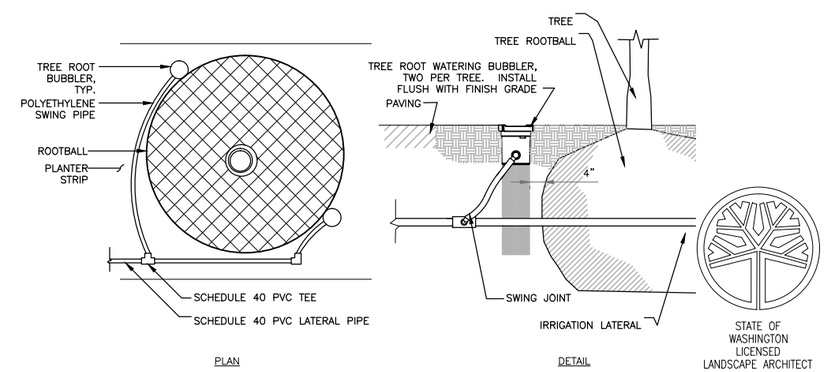

STATE OF WASHINGTON LICENSED LANDSCAPE ARCHITECT

MATTHEW C. GURRAD
LICENSE NO. 1094
EXPIRES ON _____

7 TREE ROOT WATERING SYSTEM

NOT TO SCALE

NO.	DATE	BY	APPR.	REVISIONS

Approved By

TRANSPORTATION DESIGN MANAGER — DATE
M. ARAKELYAN
PROJECT MANAGER — DATE

M. GURRAD — DESIGNED BY — DATE
S. HOEBER — DRAWN BY — DATE
G. LAI — CHECKED BY — DATE

City of Bellevue
TRANSPORTATION DEPARTMENT

HDR

124th Ave NE - NE Spring Blvd to NE Ichigo Way

IRRIGATION DETAILS

SHEET NAME **IRD3**

SHT 102 OF 198

GENERAL NOTES:

1. UNLESS OTHERWISE NOTED, ALL DIMENSIONS ARE IN FEET.
2. SEE SHEET LSD1 FOR LANDSCAPE AND URBAN DESIGN LEGEND, ABBREVIATIONS, SCHEDULE AND NOTES.

SECTION 28, T. 25 N., R5E., W.M.
KING COUNTY

95% SUBMITTAL NOT FOR CONSTRUCTION

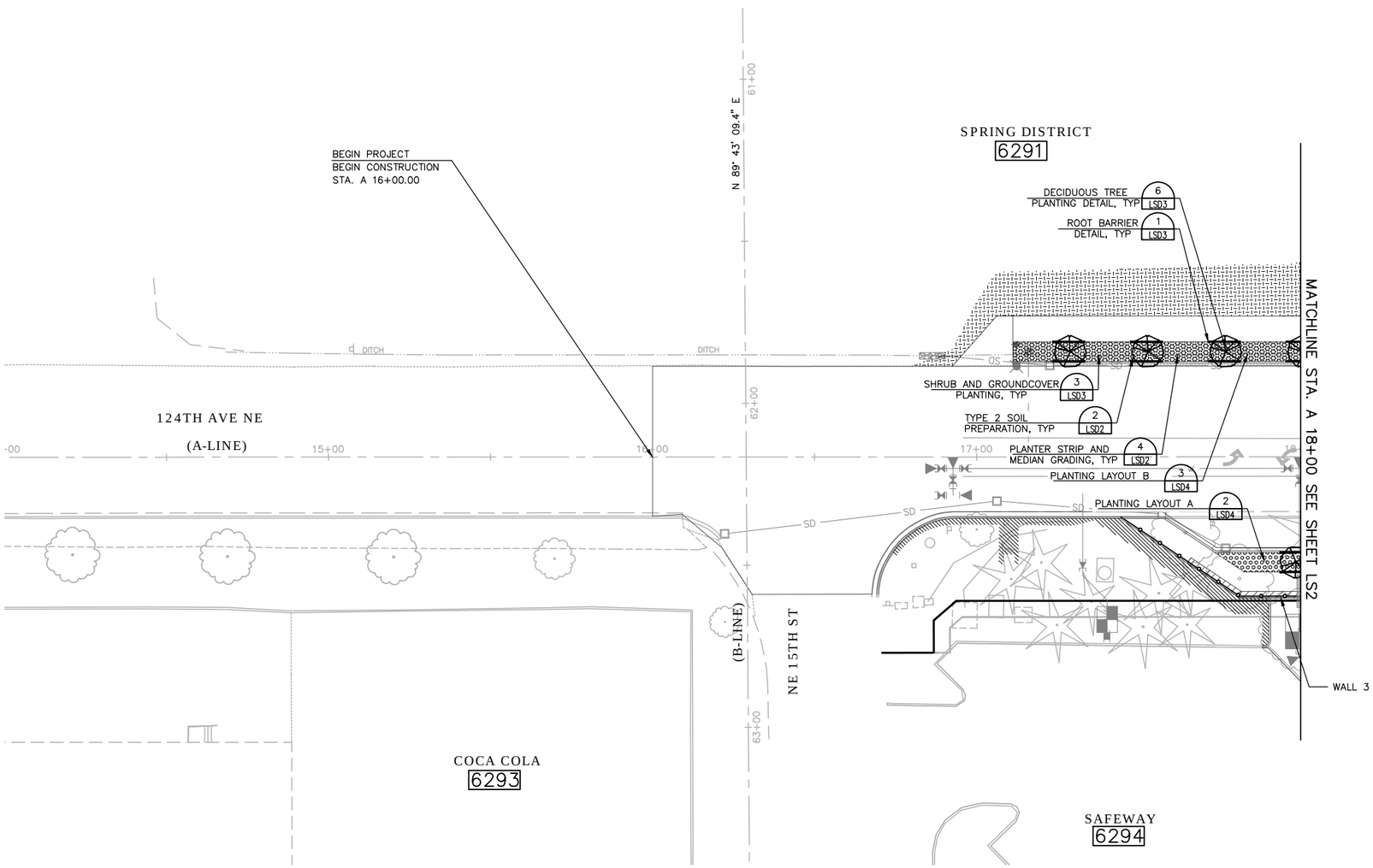

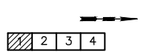

KEY PLAN

LANDSCAPE LEGEND

SYM	QTY	DESCRIPTION
		CRATAEGAS LAEVIGATA / PAUL'S SCARLETT HAWTHORN
		PLANTING LAYOUT A
		FLOWERING QUINCE
		HARDY GERANIUM
		WESTERN SWORD FERN
		RUGOSA ROSE
		DENSE SPREADING YEW
		PLANTING LAYOUT B
		BOXLEAF HONEYSUCKLE
		DENSE SPREADING YEW
		BARBERRY
		HARDY GERANIUM
		SEEDING FERTILIZING AND MULCHING LOW GROW SEED MIX
		ROOT BARRIER

20 10 0 20 40
SCALE

STATE OF WASHINGTON LICENSED LANDSCAPE ARCHITECT

MATTHEW C. GURRAD
LICENSE NO. 1094
EXPIRES ON _____

NO.	DATE	BY	APPR.	REVISIONS

Approved By

TRANSPORTATION DESIGN MANAGER — DATE
M. ARAKELYAN
PROJECT MANAGER — DATE

M. GURRAD — DESIGNED BY — DATE
J. FRYE — DRAWN BY — DATE
L. PATY — CHECKED BY — DATE

City of Bellevue
TRANSPORTATION DEPARTMENT

HDR

124th Ave NE - NE Spring Blvd to NE Ichigo Way

LANDSCAPE & URBAN DESIGN PLAN
BEGIN TO STA. A 18+00

SHEET NAME LS1

SHT 103 OF 198

GENERAL NOTES:

1. UNLESS OTHERWISE NOTED, ALL DIMENSIONS ARE IN FEET.
2. SEE SHEET LSD1 FOR LANDSCAPE AND URBAN DESIGN LEGEND, ABBREVIATIONS, SCHEDULE AND NOTES.

SECTION 28, T. 25 N., R5E., W.M.
KING COUNTY

95% SUBMITTAL NOT FOR CONSTRUCTION

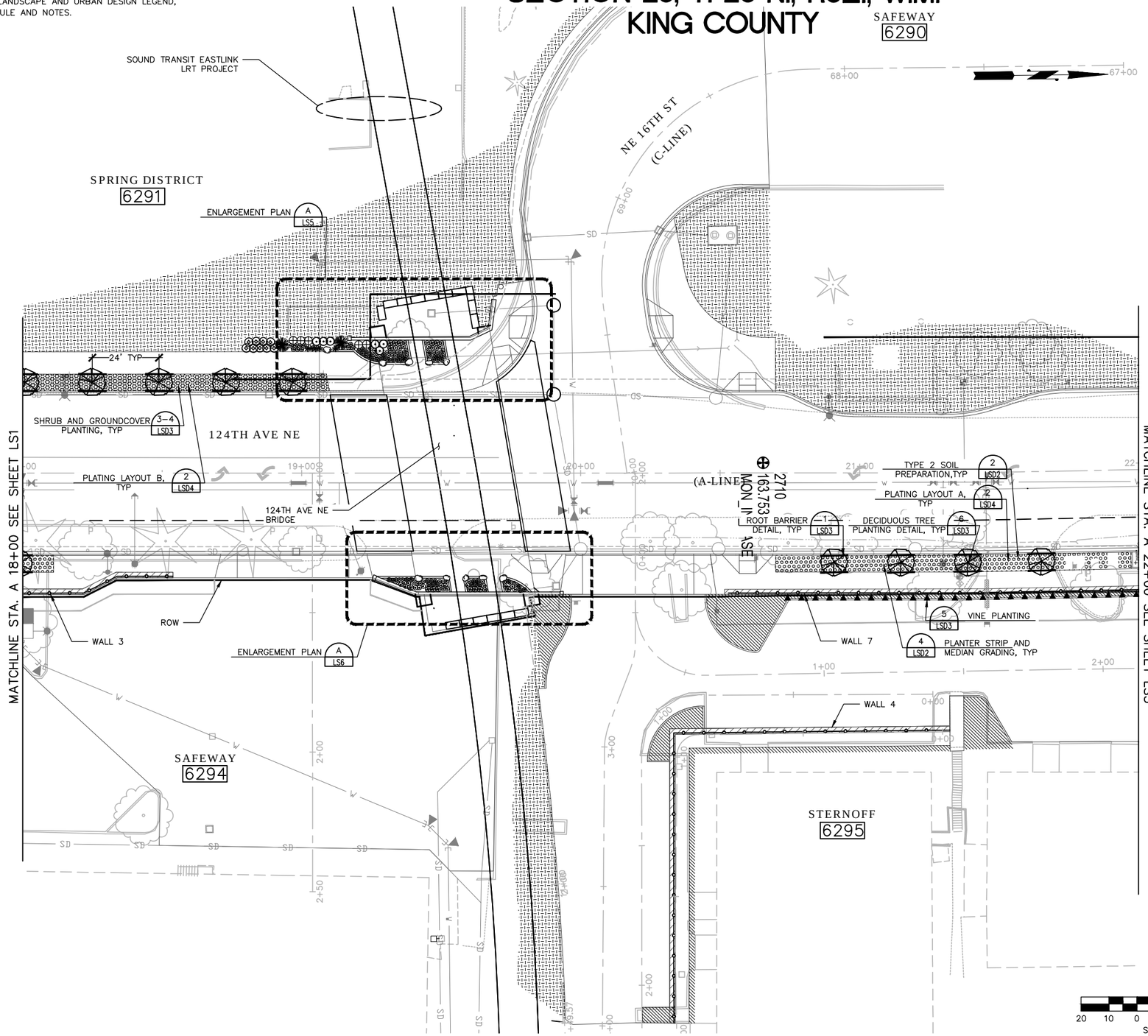

LANDSCAPE LEGEND

SYM	QTY	DESCRIPTION
		PAUL'S SCARLETT HAWTHORN
		PACIFIC WAX MYRTLE
		RUGOSA ROSE
		BOXLEAF HONEYSUCKLE
		BARBERRY
		BLUE OAT GRASS
		DAYLILY
		BOXLEAF HEBE
		PACIFIC SHORE JUNIPER
		SUNROSE

PLANTING LAYOUT A

FLOWERING QUINCE
HARDY GERANIUM
WESTERN SWORD FERN
RUGOSA ROSE
DENSE SPREADING YEW

PLANTING LAYOUT B

BOXLEAF HONEYSUCKLE
DENSE SPREADING YEW
BARBERRY
HARDY GERANIUM

SEEDING FERTILIZING AND MULCHING LOW GROW SEED MIX

ROOT BARRIER

1 2 3 4

KEY PLAN

20 10 0 20 40
SCALE

STATE OF WASHINGTON LICENSED LANDSCAPE ARCHITECT

MATTHEW C. GURRAD
LICENSE NO. 1094
EXPIRES ON _____

NO.	DATE	BY	APPR.	REVISIONS

Approved By

TRANSPORTATION DESIGN MANAGER — DATE
M. ARAKELYAN
PROJECT MANAGER — DATE

M. GURRAD — DESIGNED BY — DATE
J. FRYE — DRAWN BY — DATE
L. PATY — CHECKED BY — DATE

City of Bellevue
TRANSPORTATION DEPARTMENT

HDR

124th Ave NE - NE Spring Blvd to NE Ichigo Way

LANDSCAPE & URBAN DESIGN PLAN
STA. A 18+00 TO STA. A 22+00

SHEET NAME **LS2**

SHT 104 OF 198

GENERAL NOTES:
1. UNLESS OTHERWISE NOTED, ALL DIMENSIONS ARE IN FEET.
2. SEE SHEET LSD1 FOR LANDSCAPE AND URBAN DESIGN LEGEND, ABBREVIATIONS, SCHEDULE AND NOTES.

SECTION 28, T. 25 N., R5E., W.M.
KING COUNTY

95% SUBMITTAL NOT FOR CONSTRUCTION

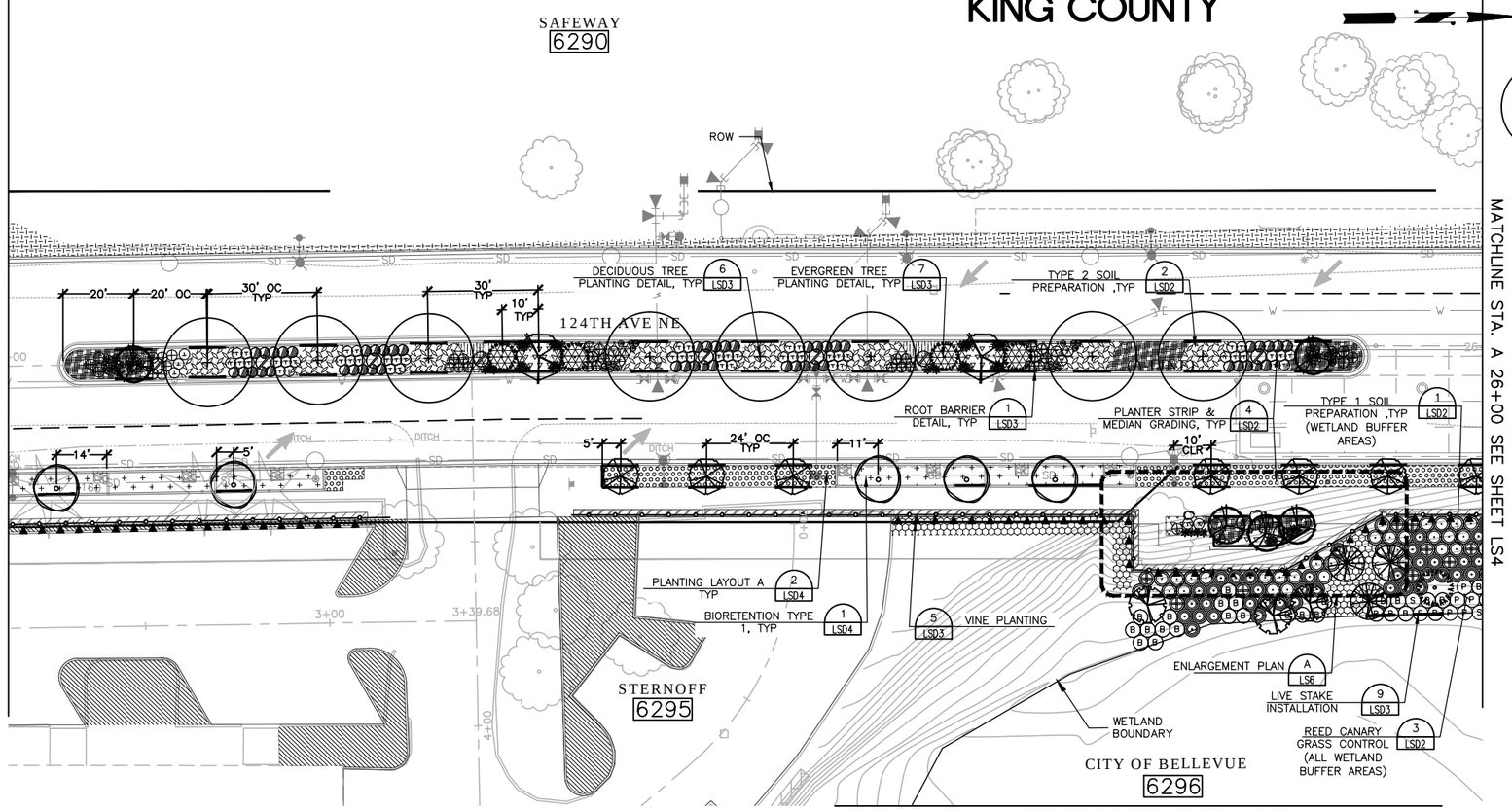

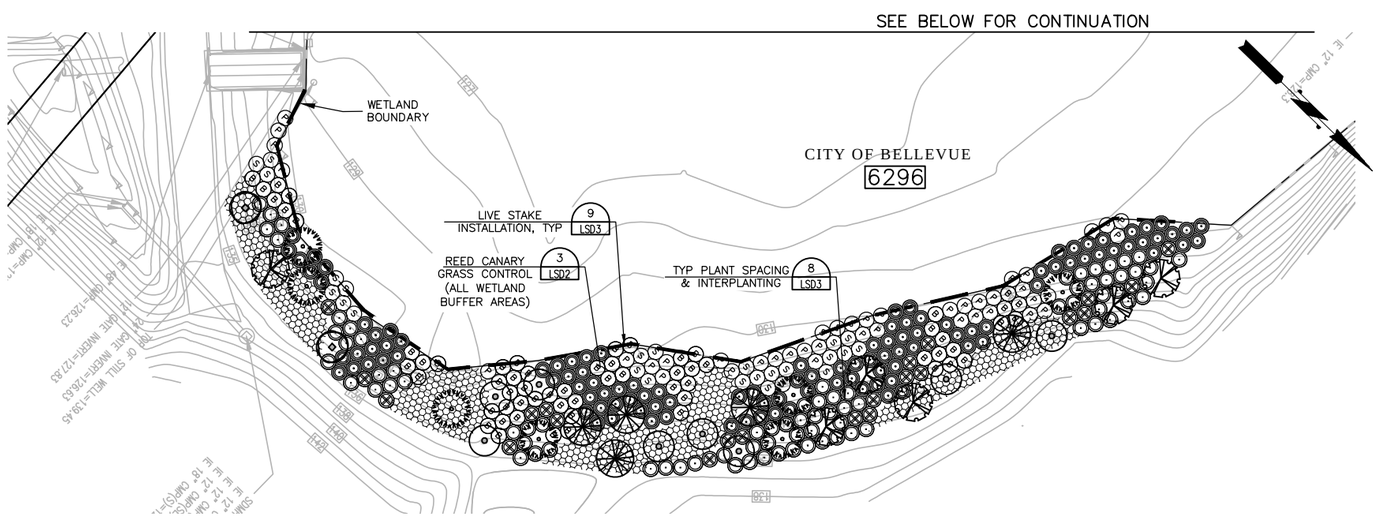

LANDSCAPE LEGEND

SYM	QTY	DESCRIPTION	SYM	QTY	DESCRIPTION
		PAUL'S SCARLET HAWTHORN			BARBERRY
		RED OAK			JAPANESE FLOWERING QUINCE
		AUTUMN BRILLIANCE SERVICEBERRY			BLUE OAT GRASS
		VENUS DOGWOOD			DAYLILY
		EXCELSA CEDAR			OAKLEAF HYDRANGEA
		WESTERN RED CEDAR			BOXLEAF HONEYSUCKLE
		ARMSTRONG MAPLE			TALL OREGON GRAPE
		VINE MAPLE			NINEBARK
		SITKA SPRUCE			WESTERN SWORD FERN
		BEAKED HAZEL			RED FLOWERING CURRANT
		OREGON ASH			RUGOSA ROSA
					SALMONBERRY
					PACIFIC WILLOW
					SITKA WILLOW
					DENSE SPREADING YEW
		SALAL			PACIFIC WILLOW LIVE STAKE
		HARDY GERANIUM			BOSTON IVY
		CREEPING MAHONIA			
		RUSSIAN SAGE			
		SNOWBERRY & WESTERN SWORD FERN MIX			
		SEEDING, FERTILIZING & MULCHING LOW GROW SEED MIX			

PLANTING LAYOUT A
- FLOWERING QUINCE
- HARDY GERANIUM
- WESTERN SWORD FERN
- RUGOSA ROSE
- DENSE SPREADING YEW

BIORETENTION PLANTING TYPE 2
- DWARF RED-TWIG DOGWOOD
- OAK LEAF HYDRANGEA
- HARDY GERANIUM
- ROCKY MOUNTAIN IRIS
- WESTERN SWORD FERN
- CALIFORNIA GRAY RUSH
- SLOUGH SEDGE
- BOWLES GOLDEN SEDGE

KEY PLAN

STATE OF WASHINGTON LICENSED LANDSCAPE ARCHITECT

MATTHEW C. GURRAD
LICENSE NO. 1094
EXPIRES ON _____

20 10 0 20 40
SCALE

NO.	DATE	BY	APPR.	REVISIONS

Approved By
TRANSPORTATION DESIGN MANAGER — DATE
M. ARAKELYAN
PROJECT MANAGER — DATE

M. GURRAD — DESIGNED BY — DATE
J. FRYE — DRAWN BY — DATE
L. PATY — CHECKED BY — DATE

City of Bellevue
TRANSPORTATION DEPARTMENT

HDR

124th Ave NE - NE Spring Blvd to NE Ichigo Way

LANDSCAPE & URBAN DESIGN PLAN
STA. A 22+00 TO STA. A 26+00

SHEET NAME LS3

GENERAL NOTES:

1. UNLESS OTHERWISE NOTED, ALL DIMENSIONS ARE IN FEET.
2. SEE SHEET LSD1 FOR LANDSCAPE AND URBAN DESIGN LEGEND, ABBREVIATIONS, SCHEDULE AND NOTES.

SECTION 28, T. 25 N., R5E., W.M.
KING COUNTY

95% SUBMITTAL NOT FOR CONSTRUCTION

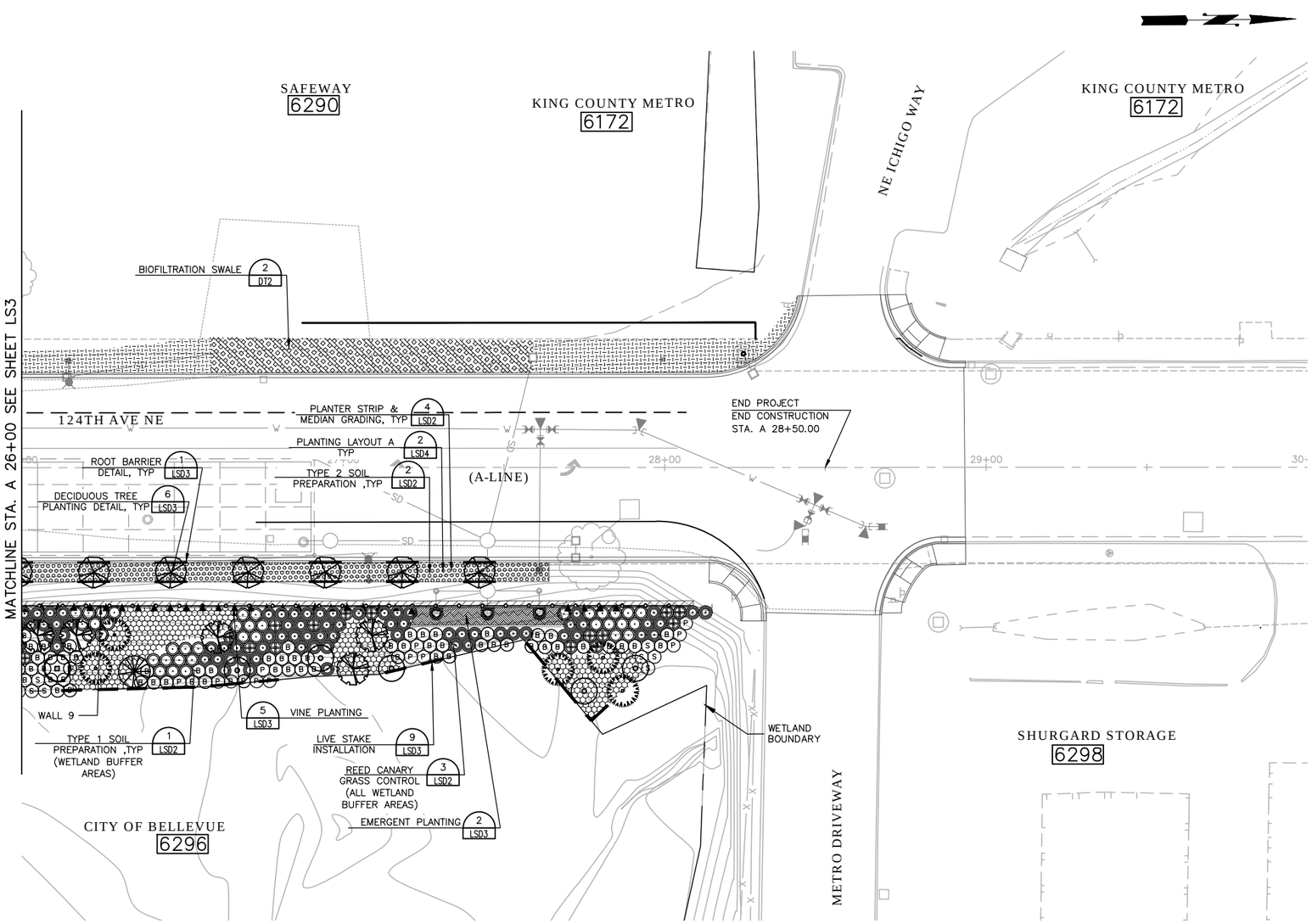

LANDSCAPE LEGEND

SYM	QTY	DESCRIPTION	SYM	QTY	DESCRIPTION
		PAUL'S SCARLET HAWTHORN			TALL OREGON GRAPE
		WESTERN RED CEDAR			NINEBARK
		VINE MAPLE			RED FLOWERING CURRANT
		SITKA SPRUCE			SALMONBERRY
		BEAKED HAZEL	B		PACIFIC WILLOW
			P		SITKA WILLOW
			S		DENSE SPREADING YEW
			T		PACIFIC WILLOW LIVE STAKE
					BOSTON IVY

PLANTING LAYOUT A

- FLOWERING QUINCE
- HARDY GERANIUM
- WESTERN SWORD FERN
- RUGOSA ROSE
- DENSE SPREADING YEW

- SNOWBERRY & WESTERN SWORD FERN MIX
- SOFT RUSH & SLOUGH SEDGE MIX
- SEEDING, FERTILIZING & MULCHING LOW GROW SEED MIX
- SEEDING, FERTILIZING & MULCHING WET NATIVE SEEDING

1 2 3

KEY PLAN

STATE OF WASHINGTON LICENSED LANDSCAPE ARCHITECT

20 10 0 20 40
SCALE

MATTHEW C. GURRAD
LICENSE NO. 1094
EXPIRES ON _____

NO.	DATE	BY	APPR.	REVISIONS

Approved By

TRANSPORTATION DESIGN MANAGER — DATE
M. ARAKELYAN
PROJECT MANAGER — DATE

M. GURRAD — DESIGNED BY — DATE
J. FRYE — DRAWN BY — DATE
L. PATY — CHECKED BY — DATE

City of Bellevue
TRANSPORTATION DEPARTMENT

124th Ave NE - NE Spring Blvd to NE Ichigo Way

LANDSCAPE & URBAN DESIGN PLAN
STA. A 26+00 TO END

SHEET NAME **LS4**

SHT 106 OF 198

GENERAL NOTES:

1. UNLESS OTHERWISE NOTED, ALL DIMENSIONS ARE IN FEET.
2. SEE SHEET LSD1 FOR LANDSCAPE AND URBAN DESIGN LEGEND, ABBREVIATIONS, SCHEDULE AND NOTES.

95% SUBMITTAL NOT FOR CONSTRUCTION

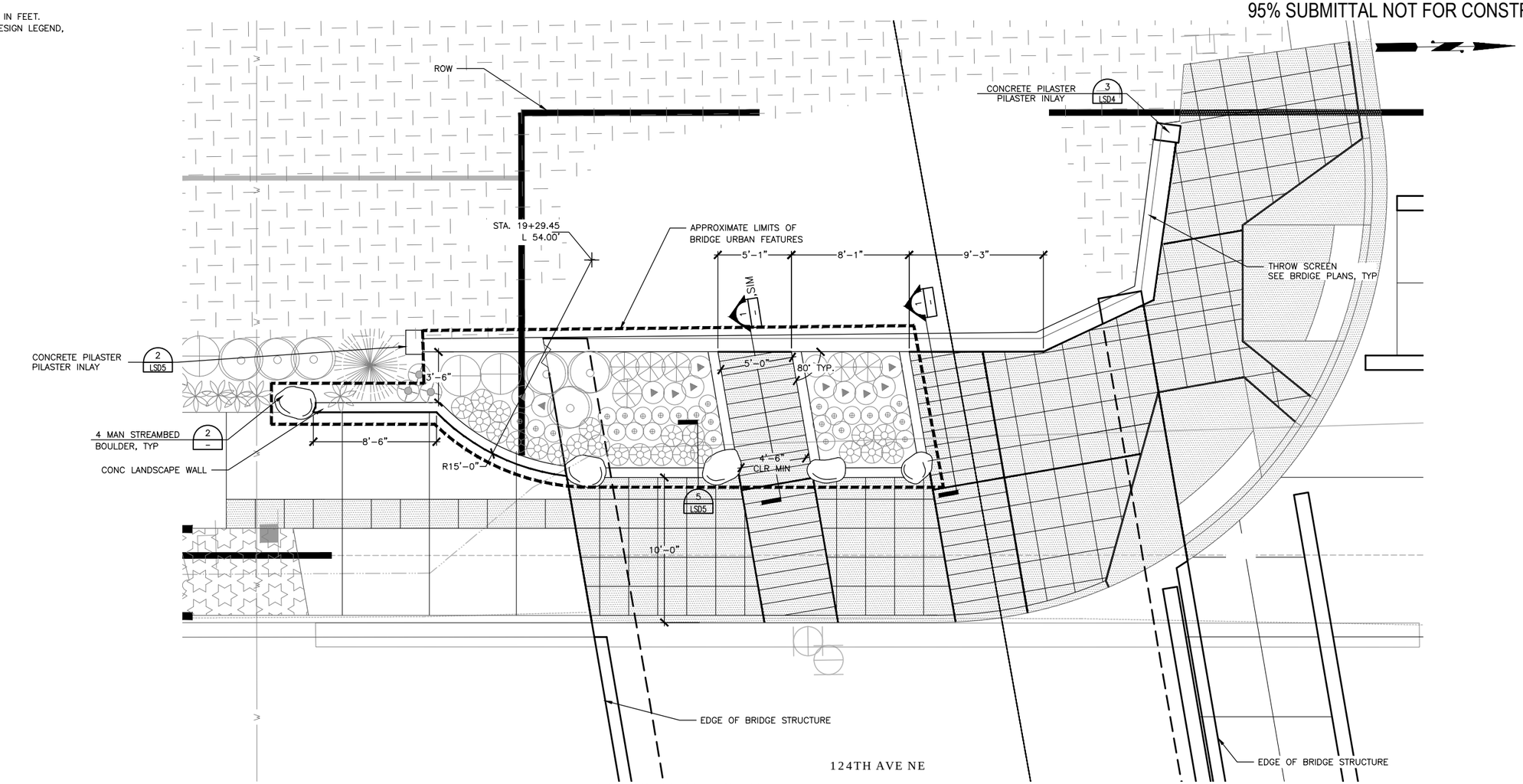

ENLARGEMENT PLAN (1 / LS2)

1/4" = 1'-0"

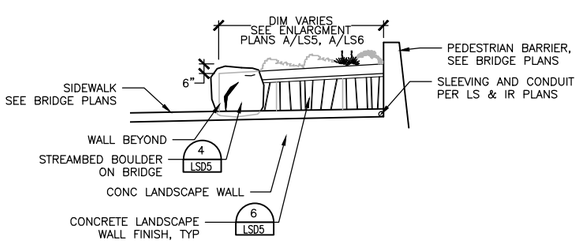

TYPICAL END WALL ELEVATION (1 / -)

SCALE: 1/4" = 1'-0"

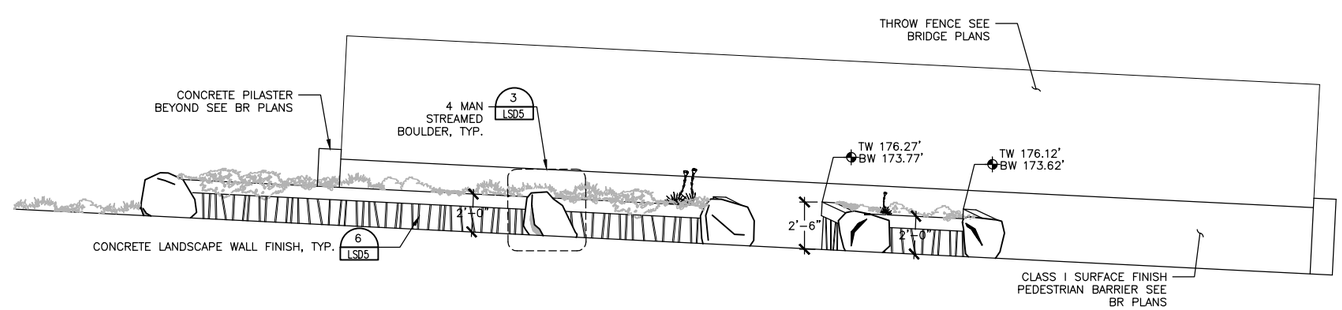

BRIDGE URBAN FEATURES
WEST DEVELOPED ELEVATION (2 / -)

SCALE: 1/4" = 1'-0"

4 2 0 4 8
SCALE

STATE OF WASHINGTON
LICENSED
LANDSCAPE ARCHITECT

MATTHEW C. GURRAD
LICENSE NO. 1094
EXPIRES ON _____

NO.	DATE	BY	APPR.	REVISIONS

Approved By

TRANSPORTATION DESIGN MANAGER — DATE
M. ARAKELYAN
PROJECT MANAGER — DATE

M. GURRAD — DESIGNED BY — DATE
J. FRYE — DRAWN BY — DATE
L. PATY — CHECKED BY — DATE

City of Bellevue
TRANSPORTATION DEPARTMENT

HDR

124th Ave NE - NE Spring Blvd to NE Ichigo Way

LANDSCAPE & URBAN DESIGN
ENLARGEMENT PLANS

SHEET NAME LS5

SHT 107 OF 198

GENERAL NOTES:

1. UNLESS OTHERWISE NOTED, ALL DIMENSIONS ARE IN FEET.
2. SEE SHEET LSD1 FOR LANDSCAPE AND URBAN DESIGN LEGEND, ABBREVIATIONS, SCHEDULE AND NOTES.

95% SUBMITTAL NOT FOR CONSTRUCTION

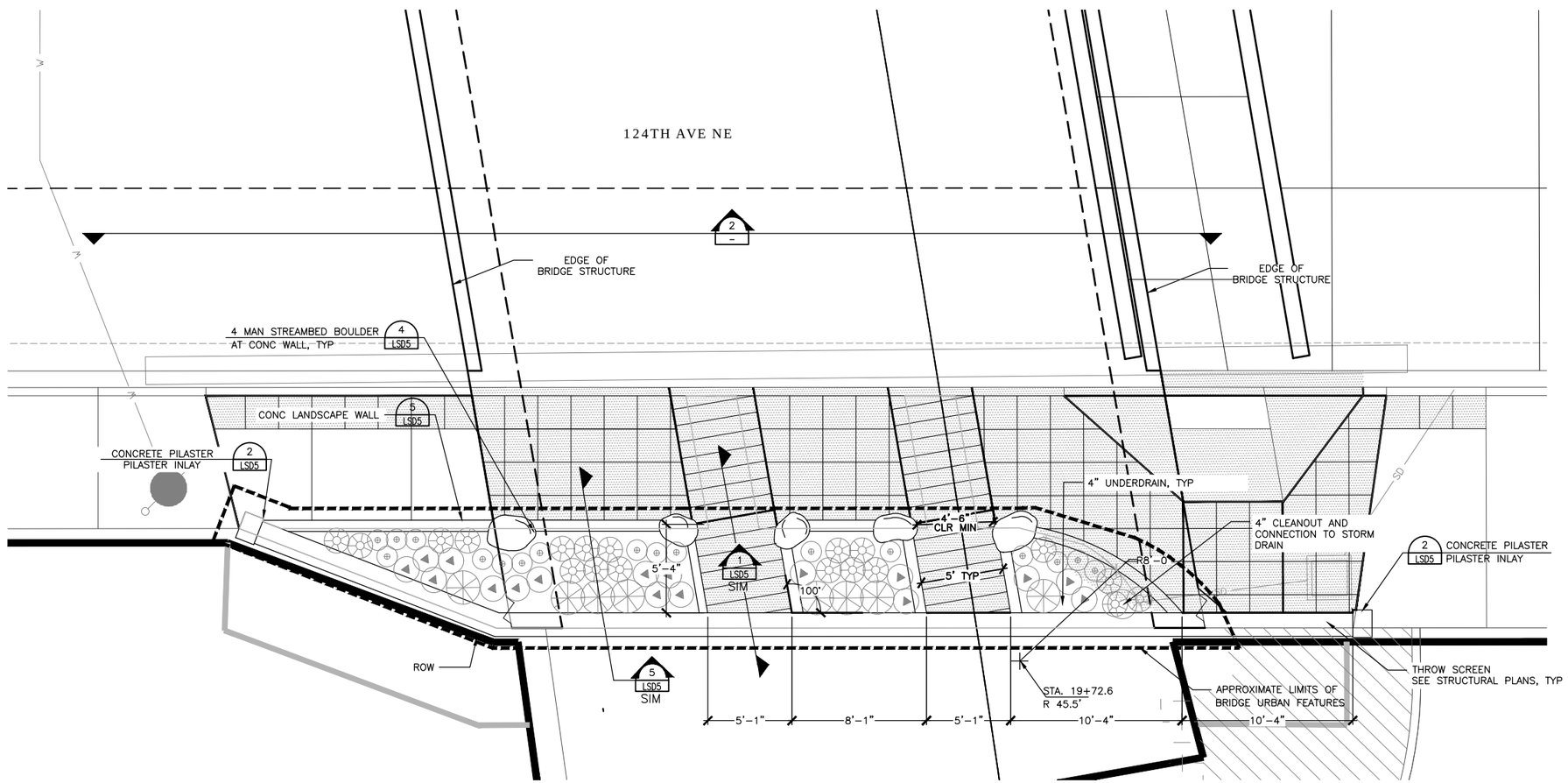

ENLARGEMENT PLAN 1/LS2
1/4" = 1'-0"

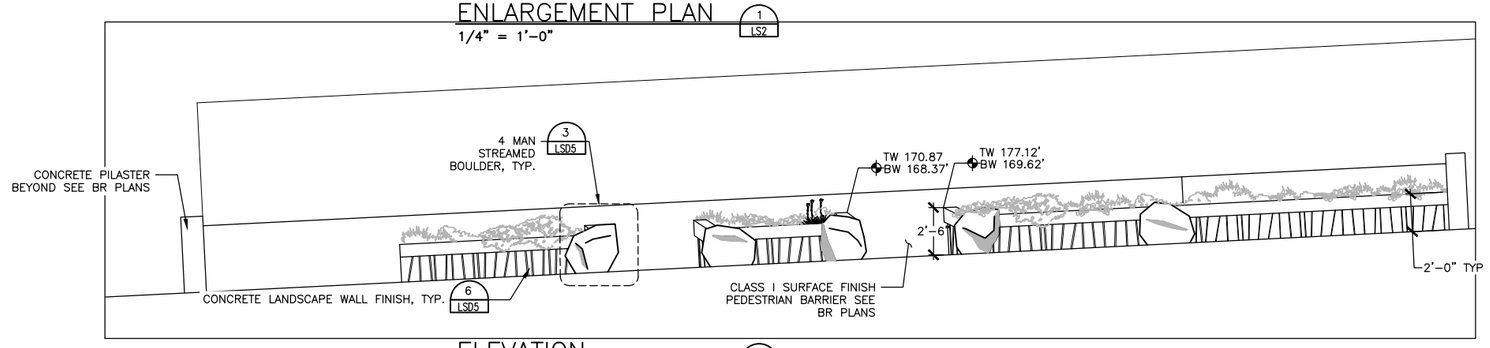

ELEVATION 2/-
1/4" = 1'-0"

STATE OF WASHINGTON LICENSED LANDSCAPE ARCHITECT

4 2 0 4 8
SCALE

MATTHEW C. GURRAD
LICENSE NO. 1094
EXPIRES ON _____

NO.	DATE	BY	APPR.	REVISIONS

Approved By

TRANSPORTATION DESIGN MANAGER — DATE
M. ARAKELYAN
PROJECT MANAGER — DATE

M. GURRAD — DESIGNED BY — DATE
J. FRYE — DRAWN BY — DATE
L. PATY — CHECKED BY — DATE

City of Bellevue
TRANSPORTATION DEPARTMENT

HDR

124th Ave NE - NE Spring Blvd to NE Ichigo Way

LANDSCAPE & URBAN DESIGN
ENLARGEMENT PLAN & ELEVATION

SHEET NAME LS6

SHT 108 OF 198

GENERAL NOTES:

1. UNLESS OTHERWISE NOTED, ALL DIMENSIONS ARE IN FEET.
2. SEE SHEET LSD1 FOR LANDSCAPE AND URBAN DESIGN LEGEND, ABBREVIATIONS, SCHEDULE AND NOTES.

95% SUBMITTAL NOT FOR CONSTRUCTION

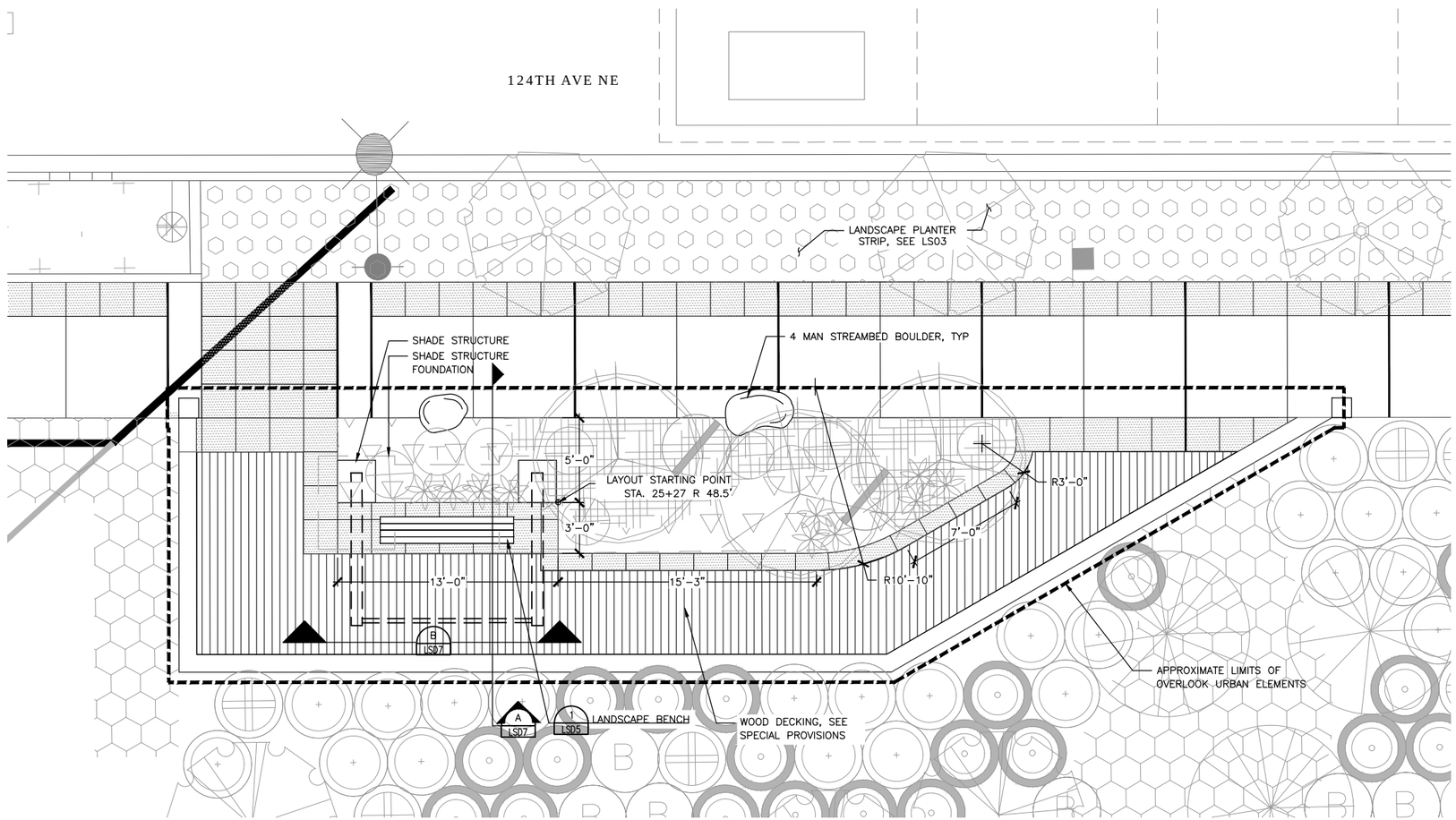

OVERLOOK ENLARGEMENT PLAN (1 / LS3)

1/4" = 1'-0"

STATE OF WASHINGTON LICENSED LANDSCAPE ARCHITECT

MATTHEW C. GURRAD
LICENSE NO. 1094
EXPIRES ON _____

5 2.25 0 5 10
SCALE

NO.	DATE	BY	APPR.	REVISIONS

Approved By

TRANSPORTATION DESIGN MANAGER — DATE
M. ARAKELYAN
PROJECT MANAGER — DATE

M. GURRAD — DESIGNED BY — DATE
J. FRYE — DRAWN BY — DATE
L. PATY — CHECKED BY — DATE

City of Bellevue
TRANSPORTATION DEPARTMENT

HDR

124th Ave NE - NE Spring Blvd to NE Ichigo Way

LANDSCAPE & URBAN DESIGN PLAN ENLARGEMENT PLANS

SHEET NAME LS7

SHT 109 OF 198

GENERAL NOTES:
1. OTHERWISE NOTED, ALL DIMENSIONS ARE IN FEET AND INCHES.

95% SUBMITTAL NOT FOR CONSTRUCTION

SYMBOL	QTY	SCIENTIFIC NAME / COMMON NAME	SIZE/REMARKS
EVERGREEN TREES			
	9	PICEA SITCHENSIS / SITKA SPRUCE	6' HT. MIN; B&B; FULL, WELL BRANCHED; STRAIGHT CENTRAL LEADER; SYMMETRICAL BRANCHING, 12' OC TRIANGULAR SPACING
	13	THUJA PLICATA / WESTERN REDCEDAR	6' HT. MIN; B&B; FULL, WELL BRANCHED; STRAIGHT CENTRAL LEADER; SYMMETRICAL BRANCHING, 12' OC TRIANGULAR SPACING
	4	THUJA PLICATA 'EXCELSA' / EXCELSA WESTERN RED CEDAR	6'-7" HT. MIN; B&B; FULL, WELL BRANCHED; STRAIGHT CENTRAL LEADER; SYMMETRICAL BRANCHING

SYMBOL	QTY	SCIENTIFIC NAME / COMMON NAME	SIZE/REMARKS
DECIDUOUS TREES			
	14	ACER CIRCINATUM / VINE MAPLE	4-5' HT MIN; B&B; FULL, WELL BRANCHED & WELL ROUNDED., 3 STEM MIN. 12' OC TRIANGULAR SPACING
	2	ACER RUBRUM 'ARMSTRONG' / ARMSTRONG RED MAPLE	3" CAL; B&B; FULL, WELL BRANCHED & WELL ROUNDED. STRAIGHT CENTRAL LEADER & SINGLE TRUNK; STREET TREE GRADE.
	5	AMELANCHIER GRANDIFOLIA 'AUTUMN BRILLIANCE' / AUTUMN BRILLIANCE SERVICEBERRY	1.5" CAL; B&B; FULL, WELL BRANCHED & WELL ROUNDED. STRAIGHT CENTRAL LEADER & SINGLE TRUNK; STREET TREE GRADE.
	5	CORNUS 'Kn30 8' VENUS / VENUS DOGWOOD	6' HT MIN; B&B; FULL, WELL BRANCHED & WELL ROUNDED. STRAIGHT CENTRAL LEADER; 4' CLR TO FIRST BRANCH, SYMMETRICAL BRANCHING.
	3	CORYLUS CORNUTA / BEAKED HAZELNUT	4-5' HT MIN; B&B; FULL, WELL BRANCHED & WELL ROUNDED., 3 STEM MIN. 12' OC TRIANGULAR SPACING
	4	CRATAEGUS LAEVIGATA / PAULS' SCARLET HAWTHORN	1.5" CAL; B&B; FULL, WELL BRANCHED & WELL ROUNDED. STRAIGHT CENTRAL LEADER & SINGLE TRUNK; STREET TREE GRADE.
	13	FRAXINUS LATIFOLIA / OREGON ASH	1" CAL.; FULL, WELL BRANCHED & WELL ROUNDED. STRAIGHT CENTRAL LEADER & SINGLE TRUNK, 12' OC TRIANGULAR SPACING
	8	QUERCUS RUBRA / RED OAK	4" CAL; B&B; FULL, WELL BRANCHED & WELL ROUNDED. STRAIGHT CENTRAL LEADER & SINGLE TRUNK; STREET TREE GRADE.

SYMBOL	QTY	SCIENTIFIC NAME / COMMON NAME	SIZE/REMARKS
BIORETENTION PLANTING TYPE 1 (1/110)			
	170	CAREX OBNUPTA / SLOUGH SEDGE	10 CU IN PLUG., 10" OC TRIANGULAR SPACING
	350	CAREX ELATA 'AUREA' / BOWLES GOLDEN SEDGE	10 CU IN PLUG., 10" OC TRIANGULAR SPACING
	36	CORNUS SERICEA 'KELSEYI' / DWARF RED-OSIER DOGWOOD	2 GAL., 30" OC TRIANGULAR SPACING
	48	GERANIUM X RIVERSLSLEANIANUM 'MAVIS SIMPSON' / HARDY GERANIUM	1 GAL,, 12" TRIANGULAR SPACING
	12	HYDRANGEA QUERCIFOLIA 'RUBY SLIPPERS' / OAK LEAF HYDRANGEA	5 GAL., SPACED PER PLAN
	36	IRIS MISSOURIENSIS / ROCKY MOUNTAIN IRIS	1 GAL., 12" OC TRIANGULAR SPACING
	260	JUNCUS GRAYII / CALIFORNIA GRAY RUSH	10 CU IN PLUG., 10" OC TRIANGULAR SPACING
	56	POLYSTICHUM MUNITUM / WESTERN SWORD FERN	1 GAL., 18" TRIANGULAR SPACING

SYMBOL	QTY	SCIENTIFIC NAME / COMMON NAME	SIZE/REMARKS
PLANTING LAYOUT A (2/110)			
	24	CHAENOMELES JAPONICA 'ORANGE DELIGHT' / FLOWERING QUINCE	2 GAL., 30" OC TRIANGULAR SPACING
	850	GERANIUM X RIVERSLSLEANIANUM 'MAVIS SIMPSON' / HARDY GERANIUM	1 GAL,, 12" OC TRIANGULAR SPACING
	96	POLYSTICHUM MUNITUM / WESTERN SWORD FERN	1 GAL,, 18" OC TRIANGULAR SPACING
	72	ROSA RUGOSA 'PINK PAVEMENT ROKOKO' / PAVEMENT RUGOSA ROSE	2 GAL., 30" OC TRIANGULAR SPACING
	32	TAXUS X MEDIA 'DENSIFORMIS' / DENSE SPREADING YEW	5 GAL., 30" OC TRIANGULAR SPACING
PLANTING LAYOUT B (3/110)			
	28	BERBERIS THUNBERGII 'CRIMSON PIGMEY' / JAPANESE BARBERRY	2 GAL., 30" OC TRIANGULAR SPACING
	340	GERANIUM X RIVERSLSLEANIANUM 'MAVIS SIMPSON' / HARDY GERANIUM	1 GAL.,, 12" OC TRIANGULAR SPACING
	42	LONICERA PILEATA 'LEMON ZEST' / BOXLEAF HONEYSUCKLE	2 GAL., 30" OC TRIANGULAR SPACING
	21	TAXUS X. MEDIA 'DENSIFORMIS' / DENSE SPREADING YEW	5 GAL., 30" OC TRIANGULAR SPACING

SYMBOL	QTY	SCIENTIFIC NAME / COMMON NAME	SIZE/REMARKS
SHRUBS / GRASSES / PRENNIALS			
	9	BERBERIS THUNBERGII 'CRIMSON PIGMEY' / JAPANESE BARBERRY	2 GAL., 30" OC TRIANGULAR SPACING
	50	CHAENOMELES JAPONICA 'ORANGE DELIGHT' / JAPANESE FLOWERING QUINCE	2 GAL., 30" OC TRIANGULAR SPACING
	29	HEBE BUXIFOLIA / BOXLEAF HEBE	1 GAL., 18" OC TRIANGULAR SPACING
	43	HELIANTHEMUM NUMMULARIUM 'ANNABEL' / DOUBLE PINK SUNROSE	1 GAL., 18" OC TRIANGULAR SPACING
	25	HELICTOTRICHON SEMPERVIRENS / BLUE OAT GRASS	1 GAL., 2' OC TRIANGULAR SPACING
	40	HEMEROCALIS 'BLACK EYED STELLA' / DAYLILY	1 GAL., 18" OC TRIANGULAR SPACING
	10	HYDRANGEA QUERCIFOLIA 'RUBY SLIPPERS' / OAKLEAF HYDRANGEA	5 GAL., SPACED PER PLAN
	42	JUNIPERUS CONFERTA 'BLUE PACIFIC' / PACIFIC SHORE JUNIPER	1 GAL., 18" OC TRIANGULAR SPACING
	45	LONICERA PILEATA 'LELMON ZEST' / PRIVET HONEYSUCKLE	2 GAL., 30" OC TRIANGULAR SPACING
	150	MAHONIA AQUIFOLIUM / TALL OREGON GRAPE	2 GAL., 4' OC TRIANGULAR SPACING
	2	MYRICA CALIFORNICA / PACIFIC WAX MYRTLE	5 GAL., 6' OC TRIANGULAR SPACING
	218	PYSOCARPUS CAPITATUS / NINEBARK	2 GAL., 4' OC TRIANGULAR SPACING
	49	POLYSTICUM MUNITUM / WESTERN SWORD FERN	1 GAL., 18" OC TRIANGULAR SPACING
	46	RIBES SANGUINEUM / RED FLOWERING CURRANT	2 GAL., 4' OC TRIANGULAR SPACING
	6	ROSA RUGOSA 'PINK PAVEMENT ROKOKO' / PAVEMENT SERIES RUGOSA ROSA	2 GAL.; GRAFTED ON ROSA MULTIFLORA ROOTSTOCK. 3' OC TRIANGULAR SPACING
	148	RUBUS SPECTABILIS / SALMONBERRY	2 GAL., 4' OC TRIANGULAR SPACING
	56	SALIX LUCIDA / PACIFIC WILLOW	1 GAL., 4' OC TRIANGULAR SPACING
	38	SALIX SITCHENSIS / SITKA WILLOW	1 GAL., 4' OC TRIANGULAR SPACING
	63	TAXUS X. MEDIA 'DENSIFORMIS' / DENSE SPREADING YEW	5 GAL., 30" OC TRIANGULAR SPACING
LIVE STAKES			
	200	SALIX LUCIDA / PACIFIC WILLOW	36" LIVE STAKE, SPACED 2' OC ALONG GRADE
VINES			
	108	PARTHENOCISSUS TRICUSPIDATA 'VETCHII' / BOSTON IVY	1 GAL., SPACED 5' OC ALONG BASE OF WALLS INDICATED

SYMBOL	QTY	SCIENTIFIC NAME / COMMON NAME	SIZE/REMARKS
GROUNDCOVERS / PERENNIAL			
	340	GAULTHERIA SHALLON / SALAL	1 GAL., 18" OC TRIANGULAR SPACING
	110	GERANIUM X RIVERSLSLEANIANUM 'MAVIS SIMPSON' / HARDY GERANIUM	1 GAL., 12" OC TRIANGULAR SPACING
	185	MAHONIA REPENS / CREEPING MAHONIA	2 GAL., 18" OC TRIANGULAR SPACING
	10	PERVOSKIA ATRIPLICIFOLIA / RUSSIAN SAGE	1 GAL., 30" OC TRIANGULARLY SPACING

SYMBOL	QTY	SCIENTIFIC NAME / COMMON NAME	SIZE/REMARKS
PLANT MIXES			
	270	SYMPORICARPUS ALBUS / SNOWBERRY	1 GAL., SPACED 4' OC TRIANGULAR SPACING, PLANT IN CLUSTERS OF 5 TO 7
	540	POLYSTICHUM MUNITUM / WESTERN SWORD FERN	1 GAL., 2' OC SPACING, INTERPLANTED
	120	JUNCUS EFFUSUS / SOFT RUSH	10 CU IN PLUG, SPACED 10" OC TRIANGULAR SPACING, PLANT IN CLUSTERS OF 15-25 OF SAME SPECIES, 50% OF EACH SPECIES ↓
	120	CAREX OBNUPTA / SLOUGH SEDGE	

PLANTING NOTES

1. ANY DISCREPANCIES W/ THE DRAWINGS AND/OR SPECS & SITE CONDITIONS SHALL BE BROUGHT TO THE ATTENTION OF THE ENGINEER PRIOR TO PROCEEDING W/ CONSTRUCTION
2. THE CONTRACTOR IS RESPONSIBLE FOR LOCATING UTILITIES PRIOR TO BEGINNING CONSTRUCTION
3. PLANT MATERIAL LOCATIONS SHALL BE COORDINATED W/ SPRINKLER IRRIGATION HEAD LOCATIONS TO AVOID AY CONFLICTS
4. CONTRACTOR SHALL FIELD STAKE TREE & SHRUB PLANTING LOCATIONS AND SPRAY PAINT GROUNDCOVER BEDS PRIOR TO PLANTING FOR ENGINEER REVIEW & APPROVAL

BACK OF SIDEWALK LANDSCAPE SCHEDULE

SYMBOL	QTY	DESCRIPTION	REMARKS
	0.25 AC	SEEDING, FERTILIZING & MULCHING LOW GROW SEED MIX	SEE SPECIAL PROVISIONS FOR SEED MIX
	0.03 AC	SEEDING, FERTILIZING & MULCHING WET NATIVE SEEDING	SEE SPECIAL PROVISIONS FOR SEED MIX
	45 CY 180 CY 29 CY	PRIVATE PROPERTY RESTORATION - COMPOST - TOPSOIL TYPE A - MULCH	SOIL PREPARATION PER 1/LSD2. SEE SPECIAL PROVISIONS FOR ADDITIONAL REQUIREMENTS.

ABBREVIATIONS

#	NUMBER
%	PERCENTAGE
&	AND
@	AT
AC	ACRE
APPROX	APPROXIMATE
B&B	BALLED AND BURLAPPED
℄	CENTER LINE
CAL	CALIPER
CONC	CONCRETE
CONT	CONTAINER
CU	CUBIC
DIA	DIAMETER
DWG/DWGS	DRAWING(S)
ENG	ENGINEER
EX	EXISTING
GAL	GALLON
HT	HEIGHT
IN	INCHES
LF	LINEAR FEET
MAX	MAXIMUM
MRF'S	MANUFACTURERS
MIN	MINIMUM
OC	ON CENTER
QTY	QUANTITY
ROW	RIGHT OF WAY
SIM	SIMILAR
SPECS	SPECIFICATIONS
STA	STATION
TYP	TYPICAL
W/	WITH

LEGEND

- X1/110 — DETAIL IDENTIFICATION / SHEET IDENTIFICATION
- ROW LINE
- PEDESTRIAN RAILING SYSTEM - TYPE 1
- PEDESTRIAN RAILING SYSTEM - TYPE 2
- PIGMENTED CEMENT CONC SIDEWALK DAVIS COLORS GRAPHITE GRAY OR ENGINEER APPROVED EQUAL
- 2 — SECTION CUT LINE
- 2 — ELEVATION LINE
- STREAMBED COBBLES - MEETING REQUIREMENTS FOR 4" COBBLES PER SECTION 9-03.11(2)

STATE OF WASHINGTON LICENSED LANDSCAPE ARCHITECT

MATTHEW C. GURRAD
LICENSE NO. 1094
EXPIRES ON _____

NO.	DATE	BY	APPR.	REVISIONS

Approved By

TRANSPORTATION DESIGN MANAGER — DATE
M. ARAKELYAN
PROJECT MANAGER — DATE

M. GURRAD — DESIGNED BY — DATE
J. FRYE — DRAWN BY — DATE
L. PATY — CHECKED BY — DATE

City of Bellevue
TRANSPORTATION DEPARTMENT

HDR

124th Ave NE - NE Spring Blvd to NE Ichigo Way

LANDSCAPE SCHEDULE, NOTES, LEGEND AND ABBREVIATIONS

SHEET NAME: LSD1

SHT 110 OF 198

95% SUBMITTAL NOT FOR CONSTRUCTION

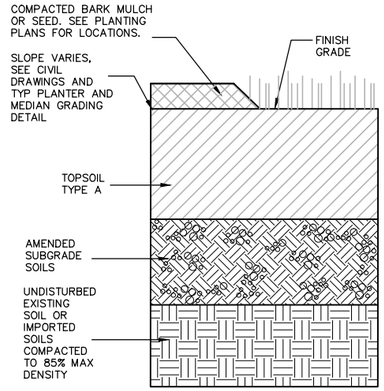

PLANTING AREA PREPARATION CONSTRUCTION SEQUENCE:

1. AFTER CONCRETE AND OTHER INFRASTRUCTURE WORK IS COMPLETED, ESTABLISH SUBGRADE 15" BELOW ADJACENT CURB OR PAVING IN MULCH AREAS AND 15" BELOW IN SEED AREAS.
2. REMOVE ALL DEBRIS INCLUDING STUMPS, STICKS, ROOTS AND ROCKS OVER 1" AND DISPOSE OFF SITE. ENG SHALL REVIEW AND APPROVE SUBGRADE PRIOR TO PROCEEDING WITH WORK.
3. PLACE 3" COMPACTED DEPTH OF FINE COMPOST, TILL INTO EXISTING SUBGRADE TO A DEPTH OF 6". COMPACT TO 85% MAXIMUM DRY DENSITY.
4. PLACE 12" DEPTH TOPSOIL TYPE A. COMPACT TO 85% MAXIMUM DRY DENSITY. ENG SHALL REVIEW AND APPROVE TOPSOIL INSTALLATION PRIOR TO PROCEEDING WITH WORK.
5. INSTALL 2" DEPTH OF COMPACTED BARK MULCH OR SEED PER PLANS.

TYPE 1 SOIL PREPARATION

SCALE: N.T.S.

1 / –

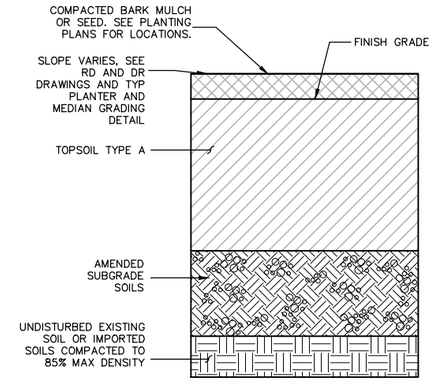

PLANTING AREA PREPARATION CONSTRUCTION SEQUENCE:

1. AFTER CONCRETE AND OTHER INFRASTRUCTURE WORK IS COMPLETED, ESTABLISH SUBGRADE 24" BELOW ADJACENT CURB OR PAVING IN MULCH AREAS.
2. REMOVE ALL DEBRIS INCLUDING STUMPS, STICKS, ROOTS AND ROCKS OVER 1" AND DISPOSE OFF SITE. ENG SHALL REVIEW AND APPROVE SUBGRADE PRIOR TO PROCEEDING WITH WORK.
3. PLACE 3" COMPACTED DEPTH OF FINE COMPOST, TILL INTO EXISTING SUBGRADE TO A DEPTH OF 6". COMPACT TO 85% MAXIMUM DRY DENSITY.
4. PLACE 21" DEPTH TOPSOIL TYPE A. COMPACT TO 85% MAXIMUM DRY DENSITY. ENG SHALL REVIEW AND APPROVE TOPSOIL INSTALLATION PRIOR TO PROCEEDING WITH WORK.
5. INSTALL 2" DEPTH OF COMPACTED BARK MULCH.

TYPE 2 SOIL PREPARATION

SCALE: N.T.S.

2 / –

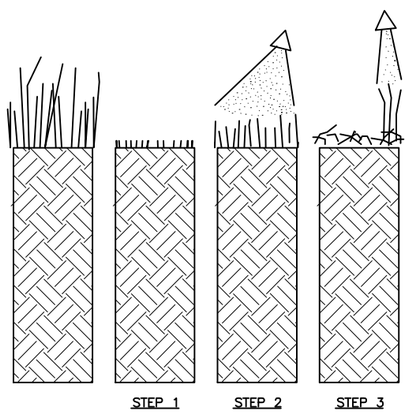

SEQUENCE OF WORK

STEP 1

APRIL 15 TO JUNE 30: CUT NOXIOUS AND UNWANTED VEGETATION TO THE GROUND AND REMOVE DEBRIS FROM THE PROJECT AREA

STEP 2

AFTER A MINIMUM OF 12" OF RE-GROWTH, OR A MINIMUM OF ONE MONTH SPRAY REGROWTH WITH HERBICIDE

STEP 3

FOLLOWING A MINIMUM OF SIX WEEKS BUT NOT LATER THAN SEPTEMBER 15, SPOT-SPRAY RE-GROWTH WITH HERBICIDE

STEP 4

PROCEED WITH SOIL PREPARATION ENGINEER REVIEW AND APPROVAL OF REED CANARY GRASS CONTROL. PREPARE SOIL PER SOIL PREPARATION TYPE 1, PLANT AND MULCH PER DETAILS

NOTE:

1. THIS SEQUENCE OF WORK SHALL APPLY TO ALL PLANTING AREAS WITH REED CANARY GRASS AND HIMALAYAN BLACK BLACKBERRY.
2. HERBICIDE APPLICATION SHALL NOT BE APPLIED TO NOXIOUS WEEDS WITHIN MOVING OR OPEN BODIES OF WATER.
3. THIS DETAIL FOR ORDER OF WORK ONLY.
4. HERBICIDE SHALL BE A GLYPHOSATE BASED, SUCH AS RODEO, OR OTHER WASHINGTON STATE DEPARTMENT OF ECOLOGY APPROVED HERBICIDE FOR USE IN OR NEAR WETLANDS OR WATER BODIES.

REED CANARY GRASS CONTROL– SEQUENCE OF WORK

SCALE: N.T.S.

3 / –

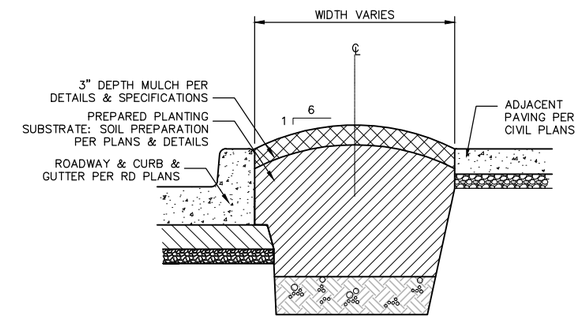

PLANTER STRIP & MEDIAN GRADING

SCALE: N.T.S.

4 / –

STATE OF WASHINGTON LICENSED LANDSCAPE ARCHITECT

MATTHEW C. GURRAD
LICENSE NO. 1094
EXPIRES ON _____

NO.	DATE	BY	APPR.	REVISIONS

Approved By

TRANSPORTATION DESIGN MANAGER — DATE
M. ARAKELYAN
PROJECT MANAGER — DATE

M. GURRAD — DESIGNED BY — DATE
J. FRYE — DRAWN BY — DATE
L. PATY — CHECKED BY — DATE

City of Bellevue
TRANSPORTATION DEPARTMENT

HDR

124th Ave NE - NE Spring Blvd to NE Ichigo Way

LANDSCAPE SOIL PREPARATION DETAILS

SHEET NAME **LSD2**

SHT 111 OF 198

GENERAL NOTES:
1. OTHERWISE NOTED, ALL DIMENSIONS ARE IN FEET AND INCHES.

95% SUBMITTAL NOT FOR CONSTRUCTION

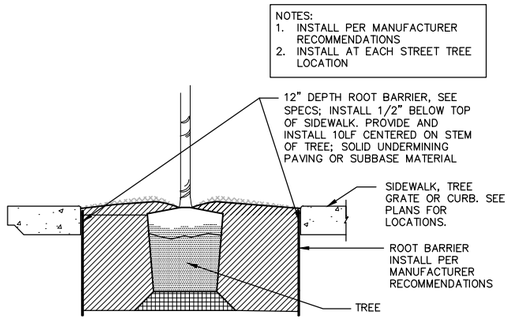

SECTION

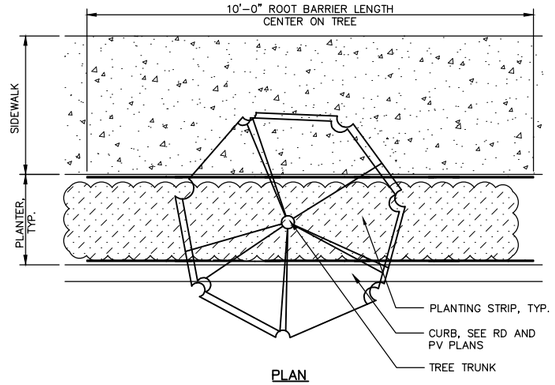

PLAN

ROOT BARRIER
SCALE: N.T.S.
1 –

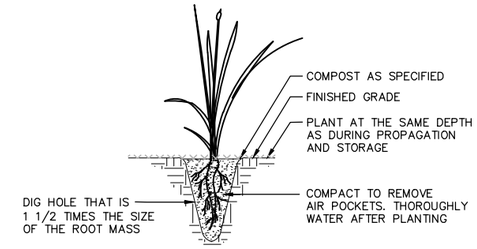

EMERGENT PLANTING
SCALE: N.T.S.
2 –

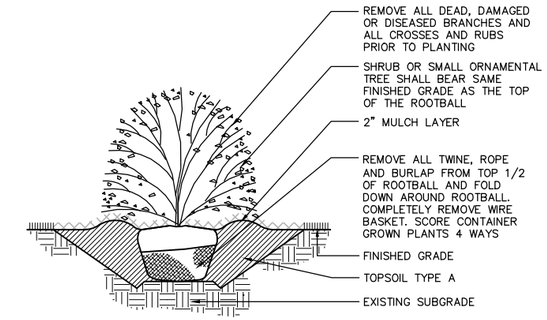

SHRUB PLANTING
SCALE: N.T.S.
3 –

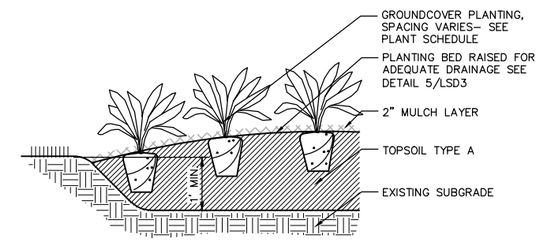

GROUNDCOVER PLANTING
SCALE: N.T.S.
4 –

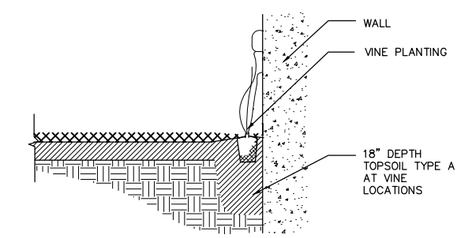

VINE PLANTING
SCALE: N.T.S.
5 –

NOTE: OMIT SOIL SAUCER WHEN PLANTING W/ IN PLANTER STRIP OR TREE WELLS

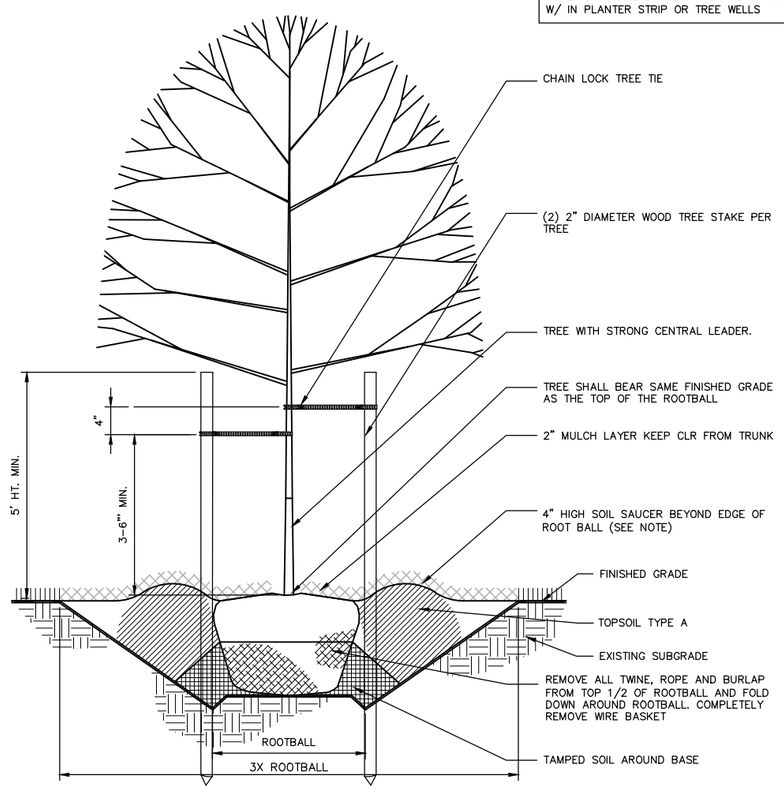

DECIDUOUS TREE PLANTING
SCALE: N.T.S.
6 –

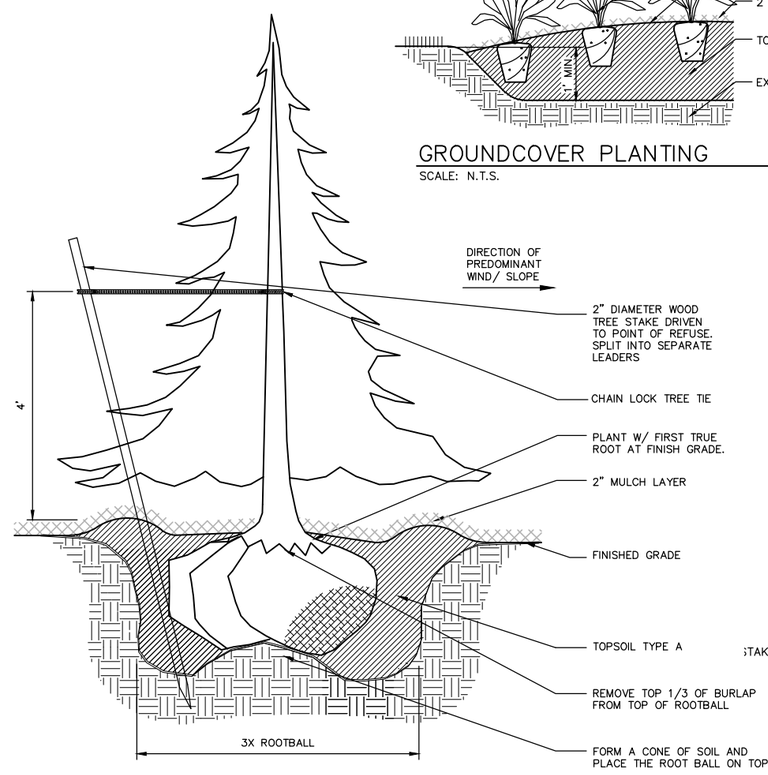

EVERGREEN TREE PLANTING
SCALE: N.T.S.
7 –

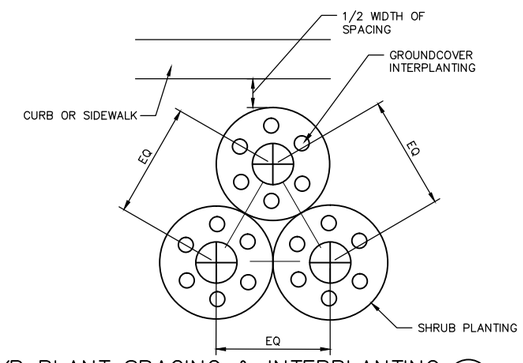

TYP PLANT SPACING & INTERPLANTING
SCALE: N.T.S.
8 –

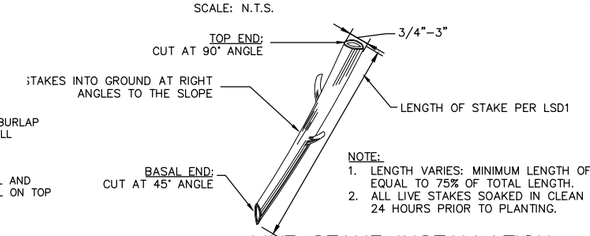

NOTE:
1. LENGTH VARIES: MINIMUM LENGTH OF 36". STAKES E EQUAL TO 75% OF TOTAL LENGTH.
2. ALL LIVE STAKES SOAKED IN CLEAN WATER FOR A I 24 HOURS PRIOR TO PLANTING.

LIVE STAKE INSTALLATION
SCALE: N.T.S.
9 –

STATE OF WASHINGTON LICENSED LANDSCAPE ARCHITECT

MATTHEW C. GURRAD
LICENSE NO. 1094
EXPIRES ON _____

NO.	DATE	BY	APPR.	REVISIONS

Approved By

TRANSPORTATION DESIGN MANAGER — DATE
M. ARAKELYAN
PROJECT MANAGER — DATE

M. GURRAD
DESIGNED BY — DATE
J. FRYE
DRAWN BY — DATE
L. PATY
CHECKED BY — DATE

City of Bellevue
TRANSPORTATION DEPARTMENT

HDR

124th Ave NE - NE Spring Blvd to NE Ichigo Way

LANDSCAPE PLANTING DETAILS

SHEET NAME **LSD3**

SHT 112 OF 198

95% SUBMITTAL NOT FOR CONSTRUCTION

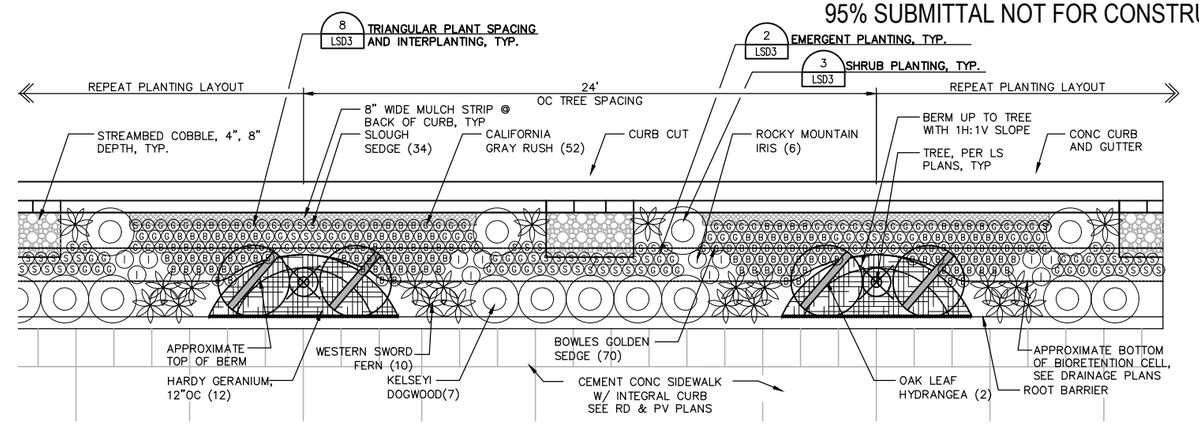

BIORETENTION TYPE 1
ENLARGED PLANTING PLAN
SCALE: 1/4" = 1'-0"
1 –

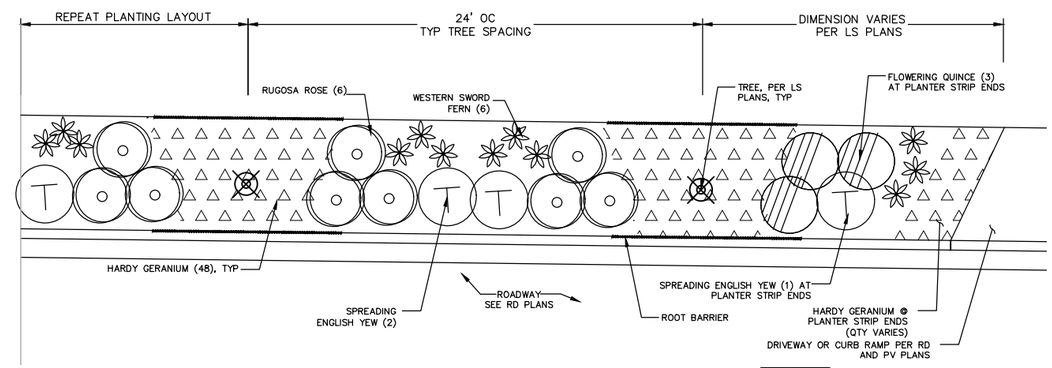

PLANTING LAYOUT A
ENLARGED PLANTING PLAN
SCALE: 1/4" = 1'-0"
2 –

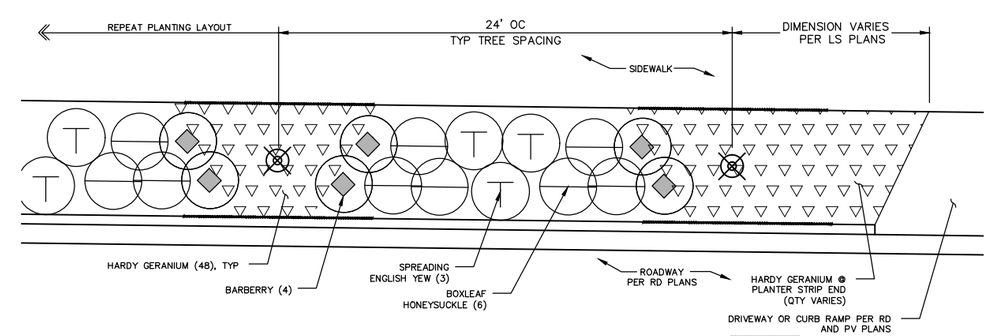

PLANTING LAYOUT B
ENLARGED PLANTING PLAN
SCALE: 1/4" = 1'-0"
3 –

STATE OF WASHINGTON LICENSED LANDSCAPE ARCHITECT

MATTHEW C. GURRAD
LICENSE NO. 1094
EXPIRES ON _____

NO.	DATE	BY	APPR.	REVISIONS

Approved By

TRANSPORTATION DESIGN MANAGER — DATE
M. ARAKELYAN
PROJECT MANAGER — DATE

M. GURRAD
DESIGNED BY — DATE
J. FRYE
DRAWN BY — DATE
L. PATY
CHECKED BY — DATE

City of Bellevue
TRANSPORTATION DEPARTMENT

HDR

124th Ave NE - NE Spring Blvd to NE Ichigo Way

LANDSCAPE PLANTING TEMPLATES

SHEET NAME **LSD4**

SHT 113 OF 198

GENERAL NOTES:
1. OTHERWISE NOTED, ALL DIMENSIONS ARE IN FEET AND INCHES.

95% SUBMITTAL NOT FOR CONSTRUCTION

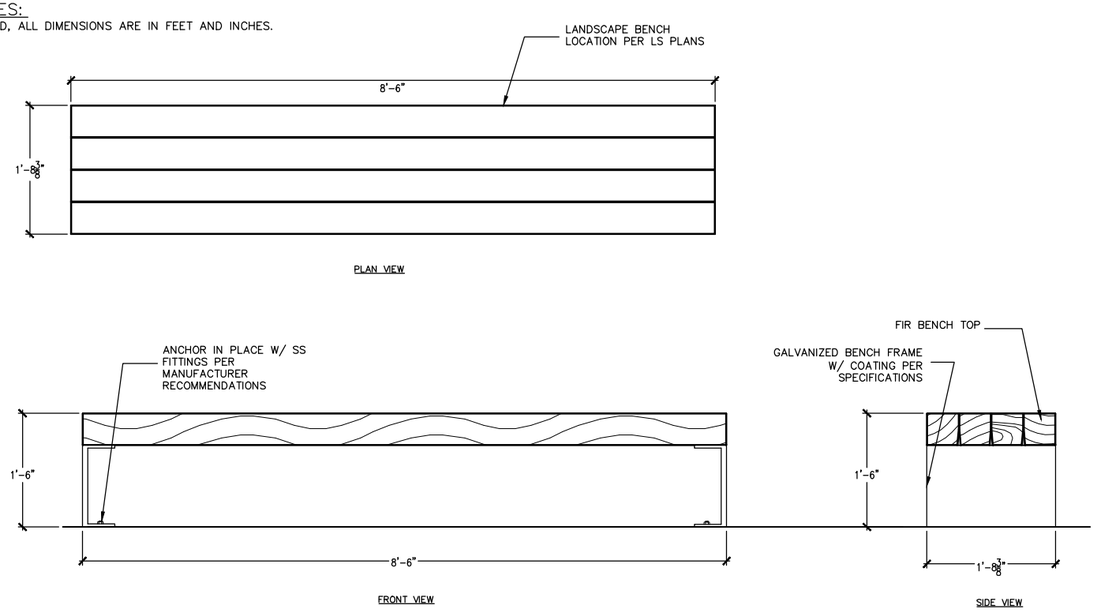

LANDSCAPE BENCH (1)
SCALE: 1"=1'

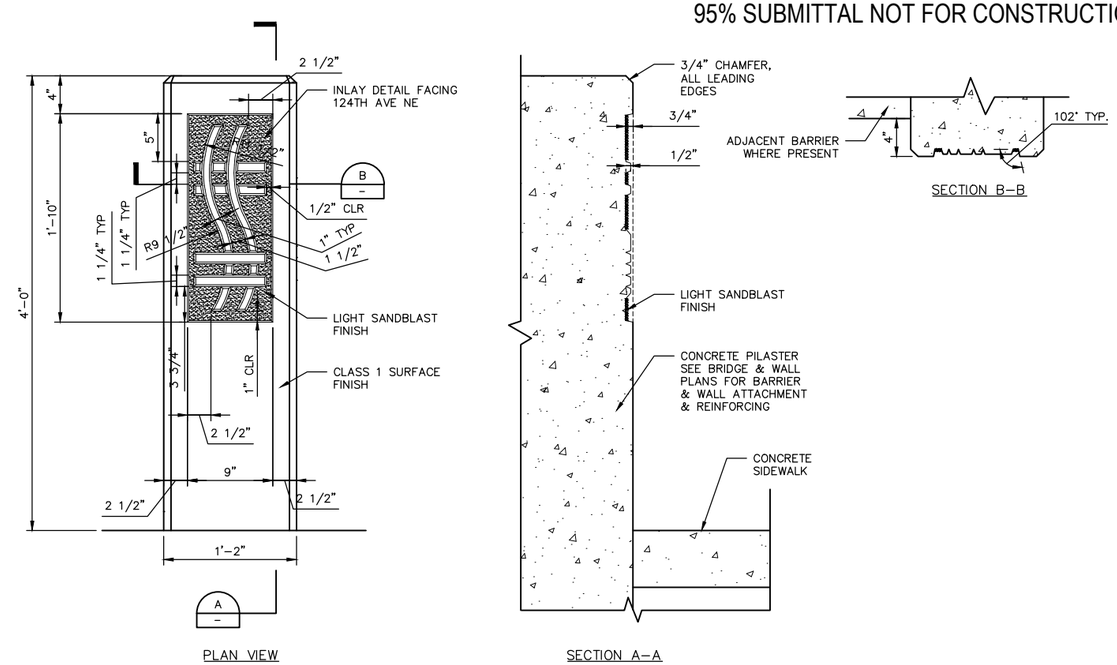

CONCRETE PILASTER (2)
SCALE: 1 1/2"=1'

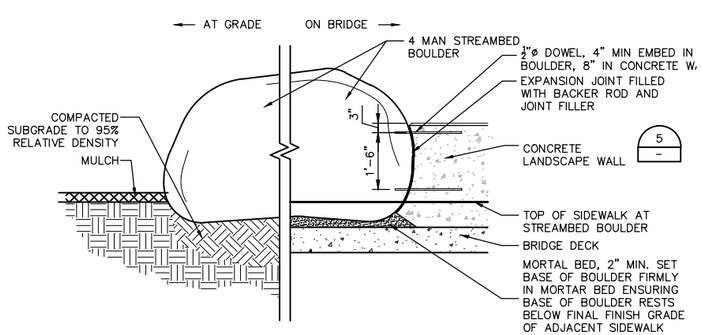

4 MAN STREAMBED BOULDER (4)
SCALE: 1/2" = 1'

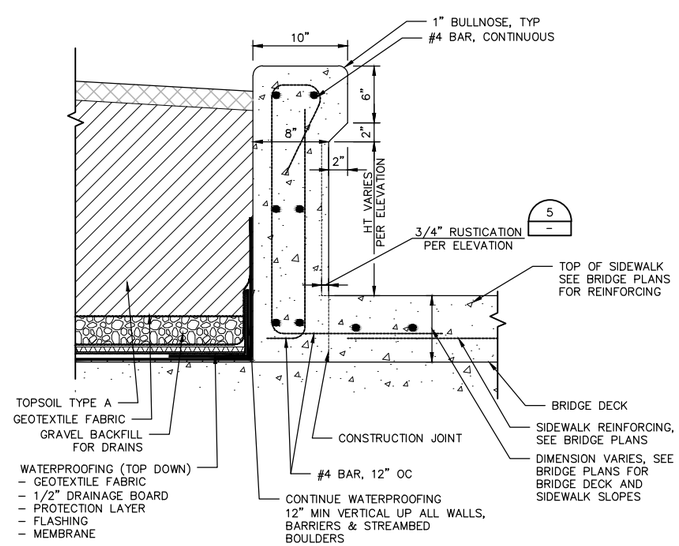

CONCRETE LANDSCAPE WALL (5)
SCALE: 1 1/2"=1'

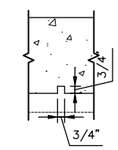

RUSTICATION STRIP (3)
SCALE: 1 1/2"=1'

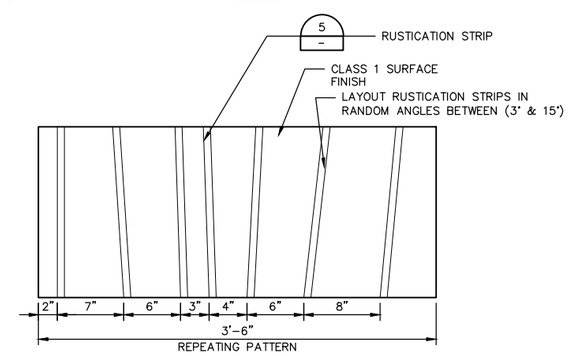

CONCRETE LANDSCAPE WALL FINISH (6)
SCALE: 1 1/2"=1'

STATE OF WASHINGTON LICENSED LANDSCAPE ARCHITECT

MATTHEW C. GURRAD
LICENSE NO. 1094
EXPIRES ON _____

NO.	DATE	BY	APPR.	REVISIONS

Approved By

TRANSPORTATION DESIGN MANAGER — DATE
M. ARAKELYAN
PROJECT MANAGER — DATE

M. GURRAD — DESIGNED BY — DATE
J. FRYE — DRAWN BY — DATE
L. PATY — CHECKED BY — DATE

City of Bellevue
TRANSPORTATION DEPARTMENT

HDR

124th Ave NE - NE Spring Blvd to NE Ichigo Way

BRIDGE URBAN DESIGN DETAILS

SHEET NAME **LSD5**

SHT 114 OF 198

GENERAL SHADE STRUCTURE STRUCTURAL NOTES

GENERAL

G1. SCOPE
THE NOTES ON THIS SHEET AND THE STANDARD STRUCTURAL DETAILS ARE GENERAL AND APPLY TO THE SHADE STRUCTURE CONSTRUCTION AND FABRICATION WHETHER SPECIFICALLY CALLED OUT OR NOT, EXCEPT WHERE THERE ARE SPECIFIC INDICATIONS TO THE CONTRARY ON STRUCTURAL SHEETS. IF THERE ARE QUESTIONS, THEY SHALL BE SUBMITTED TO THE STRUCTURAL ENGINEER AND ANSWERED IN WRITING PRIOR TO CONSTRUCTION.

G2. APPLICABLE SPECIFICATIONS AND CODES
A. INTERNATIONAL BUILDING CODE, IBC 2012 WITH APPLICABLE EDITIONS OF THE CODE REFERENCED STANDARDS.
B. LOCAL JURISDICTION AMENDMENTS

G3. DESIGN CRITERIA
1. APPLIES TO ALL STRUCTURES (UNO)
A. DEAD LOAD:
1. ACTUAL TRIBUTARY STRUCTURE WEIGHT
2. SUPERIMPOSED DEAD LOAD: 5 PSF
B. LIVE LOAD:
1. ROOF: 20 PSF (NOT REDUCIBLE)
C. WIND:
1. BASIC WIND SPEED: 110 MPH
2. EXPOSURE: B
3. ENCLOSURE: OPEN
D. SEISMIC:
1. ABOVE GRADE, NON WATER BEARING STRUCTURES:
1. RISK CATEGORY: II
2. IMPORTANCE FACTOR: 1.0
3. SPECTRAL RESPONSE ACCELERATION, SS 1.296
4. SPECTRAL RESPONSE ACCELERATION, S1 0.498
5. SITE CLASS: C
6. SEISMIC DESIGN CATEGORY: D
7. SPECTRAL RESPONSE COEFFICIENT, SDS 0.864
8. SPECTRAL RESPONSE COEFFICIENT, SD1 0.432
9. BASIC SEISMIC FORCE RESISTING SYSTEM: SPEC; ORDINARY CANTILEVER COLUMN
10. ANALYSIS PROCEDURE: EQUIVALENT LATERAL FORCE
11. RESPONSE MODIFICATION FACTOR: 1.23
12. SEISMIC RESPONSE COEFFICIENT, 0.691
13. DESIGN BASE SHEAR: 1940#
E. SNOW LOAD:
1. GROUND SNOW LOAD: 25 PSF
2. FLAT ROOF SNOW LOAD: 25 PSF
3. EXPOSURE FACTOR : 1.2
4. IMPORTANCE FACTOR: 1.0
5. THERMAL FACTOR: 1.2

G4. THE FOLLOWING NON-CONTRACTUAL GEOTECHNICAL REPORT WAS DEVELOPED FOR THIS PROJECT AND IS THE BASIS OF THIS STRUCTURAL DESIGN:
GEOTECHNICAL FIRM NAME: GEOENGINEERS, INC.
ADDRESS: 8410 154TH AVE. NE, REDMOND, WA 98052
REPORT NUMBER: 0526-177-01
REPORT DATE: 4/30/2014
ALLOWABLE [NET] SOIL BEARING = 4000 PSF

G5. SAFETY
SAFETY AND STRUCTURE STABILITY DURING CONSTRUCTION ARE THE SOLE RESPONSIBILITY OF THE CONTRACTOR. STRUCTURES HAVE BEEN DESIGNED TO RESIST THE DESIGN LIVE LOADS ONLY AS A COMPLETED STRUCTURE.

G6. OPENINGS
OPENINGS FOR PIPES, DUCTS, CONDUITS, ETC. ARE NOT ALL SHOWN ON THE STRUCTURAL DRAWINGS. COORDINATE AND PROVIDE OPENINGS AS REQUIRED TO ACCOMMODATE ALL WORK SHOWN OR SPECIFIED IN THE CONTRACT DOCUMENTS AND OTHERWISE REQUIRED FOR THE FURNISHING OF A FUNCTIONALLY COMPLETE PROJECT. REINFORCE AROUND OPENINGS PER STANDARD STRUCTURAL DETAILS UNLESS OTHERWISE SHOWN.

G7. SPECIAL INSPECTIONS
SPECIAL INSPECTIONS ARE REQUIRED IN ACCORDANCE WITH CHAPTER 1 AND CHAPTER 17 OF THE IBC. PAYMENT FOR THESE INSPECTIONS IS NOT THE RESPONSIBILITY OF THE CONTRACTOR. THE CONTRACTOR SHALL PROVIDE FOR FULL ACCESS TO THE WORK BY THE SPECIAL INSPECTOR AND SHALL PROVIDE FOR THESE INSPECTIONS IN HIS CONSTRUCTION SCHEDULE IN ACCORDANCE WITH THE SPECIFICATIONS.

GENERAL STRUCTURAL NOTES (GSN)(CONTINUED)

G8. STANDARD DETAILS
THE STANDARD DETAILS DEPICT TYPICAL DETAILING TO BE USED ON THIS PROJECT. IF CONDITIONS ARE NOT EXPLICITLY SHOWN ON THE DRAWINGS THEY SHALL BE MADE SIMILAR TO THE STANDARD DETAILS. OBTAIN APPROVAL OF ENGINEER IN WRITING FOR SIMILAR CONDITIONS PRIOR TO CONSTRUCTION.

G9. EXISTING CONSTRUCTION
THE CONTRACTOR SHALL FIELD VERIFY ALL DIMENSIONS AND ELEVATIONS OF EXISTING CONSTRUCTION AS REQUIRED TO COORDINATE NEW CONSTRUCTION. SUBMIT REQUIRED CHANGES FOR APPROVAL.

G10. EQUIPMENT LOADING
CONTRACTOR TO SUBMIT FOR REVIEW ALL EQUIPMENT SIZES, OPERATING WEIGHTS, VIBRATION FORCES, SUPPORT LOCATIONS, ALONG WITH ANY FLOOR OPENINGS, NOTCHES, AND RECESSES REQUIRED BY SUCH EQUIPMENT. CONCRETE SUPPORT PADS AND/OR FRAMING REQUIRED TO SUPPORT SAID EQUIPMENT SHALL NOT BE FABRICATED AND PLACED UNTIL THE CONCRETE SUPPORT PADS AND/OR FRAMING IS APPROVED TO SUPPORT THE EQUIPMENT.

CONCRETE

C1. DESIGN STRENGTHS:
F'c = 4500 PSI
Fy = 60,000 PSI

C2. CONCRETE COVER
UNLESS OTHERWISE NOTED, PROVIDE CONCRETE COVER FOR REINFORCING AS FOLLOWS:
CONCRETE DEPOSITED AGAINST EARTH: 3"
TIE REINFORCING AT COLS & PILASTERS: 1½"
ALL OTHER: 2"
SEE DRAWINGS FOR EXCEPTIONS

C3. SEE SPECIFICATIONS FOR REINFORCING PLACEMENT REQUIREMENTS.

C4. REFER TO OTHER DISCIPLINE DRAWINGS PRIOR TO CONSTRUCTION FOR EMBEDDED ITEMS AND PENETRATIONS NOT SHOWN ON STRUCTURAL DRAWINGS.. AS REQUIRED TO ACCOMMODATE ALL WORK SHOWN OR SPECIFIED IN THE CONTRACT DOCUMENTS AND OTHERWISE REQUIRED FOR THE FURNISHING OF A FUNCTIONALLY COMPLETE PROJECT. REINFORCE AROUND OPENINGS PER STANDARD STRUCTURAL DETAILS UNLESS OTHERWISE SHOWN.

C5. PROVIDE 3/4" CHAMFERS AT ALL EXPOSED EDGES. NOT ALL CHAMFERS MAY BE SHOWN ON DRAWINGS.

C6. FIELD ADJUST REINFORCING AT OPENINGS AND EMBEDDED ITEMS AS INDICATED.

C7. ANCHOR BOLTS NOT SPECIFIED BY ENGINEER SHALL BE DESIGNED AND CERTIFIED BY A REGISTERED PROFESSIONAL ENGINEER, RETAINED BY THE CONTRACTOR, IN ACCORDANCE WITH APPLICABLE PROJECT AND CODE REQUIREMENTS. SUBMIT AS A SHOP DRAWING FOR REVIEW AND APPROVAL BY THE ENGINEER. COORDINATE LOCATION, SIZE AND EMBEDMENT PRIOR TO CASTING CONCRETE.

C8. ABSOLUTELY NO WELDING OF REINFORCING BARS OR TORCHING TO BEND REINFORCING BARS SHALL BE ALLOWED WITHOUT SPECIFIC APPROVAL FROM THE STRUCTURAL ENGINEER.

C9. ALL CAST IN PLACE AND POST-INSTALLED ANCHORS INDICATED IN THE STRUCTURAL DOCUMENTS SHALL COMPLY WITH APPENDIX D OF ACI 318 AND CHAPTER 19 OF THE IBC. ALL EXPANSION AND ADHESIVE ANCHORS SHALL HAVE THE ICC REPORT SHOWING EQUIVALENT LOAD CAPACITY. SUBMIT AND INSTALL PER THE ICC EVALUATION REPORT.

STEEL

S1. DESIGN STRENGTHS:
HSS SECTIONS Fy=50 KSI
ALL OTHER PLATES AND SHAPES: Fy=50 KSI

S2. DIMENSIONS:
TO CENTERLINES OF COLUMNS AND BEAMS, TOP SURFACES OF BEAMS AND TUBES AND BACKS OF CHANNELS AND ANGLES UNO.

S3. ELEVATIONS:
TOP OF STEEL REFERS TO TOP SURFACE OF MEMBER OR FLANGE UNO.

S4. FILLET WELD:
WHEN FILLET WELD SIZE IS NOT INDICATED, PROVIDE MAXIMUM WELD SIZE BASED ON MATERIAL THICKNESS IN ACCORDANCE WITH AISC SPECIFICATIONS.

S5. BOLTED CONNECTIONS:
ALL BOLTED STRUCTURAL CONNECTIONS ARE BEARING TYPE CONNECTIONS UNLESS OTHERWISE SPECIFIED TO BE SLIP-CRITICAL. PROVIDE LOAD INDICATING WASHERS AT SLIP-CRITICAL CONNECTIONS.

S6. STEEL MANUAL:
CONFORM TO AISC 360, STEEL CONSTRUCTION MANUAL AND AISC 341, SEISMIC DESIGN MANUAL.

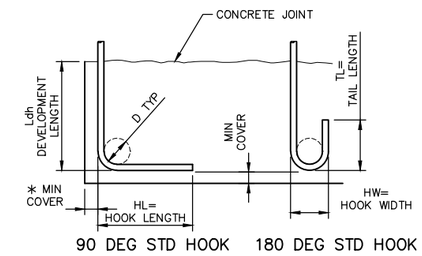

BAR SIZE GRADE 60	HL	HW	TL	D	f'c=4.0 OR 4.5 KSI Ldh *
#3	6"	3"	3"	2 1/4"	6"
#4	8"	4"	4 1/2"	3"	7"
#5	10"	5"	5"	3 3/4"	9"
#6	1'-0"	6"	6"	4 1/2"	10"
#7	1'-2"	7"	7"	5 1/4"	12"
#8	1'-4"	8"	8"	6"	14"
#9	1'-7"	11 3/4"	10 1/2"	9 1/2"	15"
#10	1'-10"	1'-1 1/4"	11 1/2"	10 3/4"	17"
#11	2'-0"	1'-2 3/4"	1'-1"	12"	19"

* COMPLYING WITH MINIMUM COVER REQUIREMENTS OF ACI 318, 12.5.3. OTHERWISE Ldh MUST BE RE-CALCULATED.

REINFORCING HOOK SCHEDULE
1"=1'-0"
1 / LSD7

STATE OF WASHINGTON LICENSED LANDSCAPE ARCHITECT

MATTHEW C. GURRAD
LICENSE NO. 1094
EXPIRES ON _____

NO.	DATE	BY	APPR.	REVISIONS

Approved By
TRANSPORTATION DESIGN MANAGER DATE
M. ARAKELYAN
PROJECT MANAGER DATE

M. GURRAD DESIGNED BY DATE
J. FRYE DRAWN BY DATE
L. PATY CHECKED BY DATE

City of Bellevue
TRANSPORTATION DEPARTMENT

124th Ave NE - NE Spring Blvd to NE Ichigo Way

OVERLOOK URBAN ELEMENTS
GENERAL NOTES

SHEET NAME LSD6

95% SUBMITTAL NOT FOR CONSTRUCTION

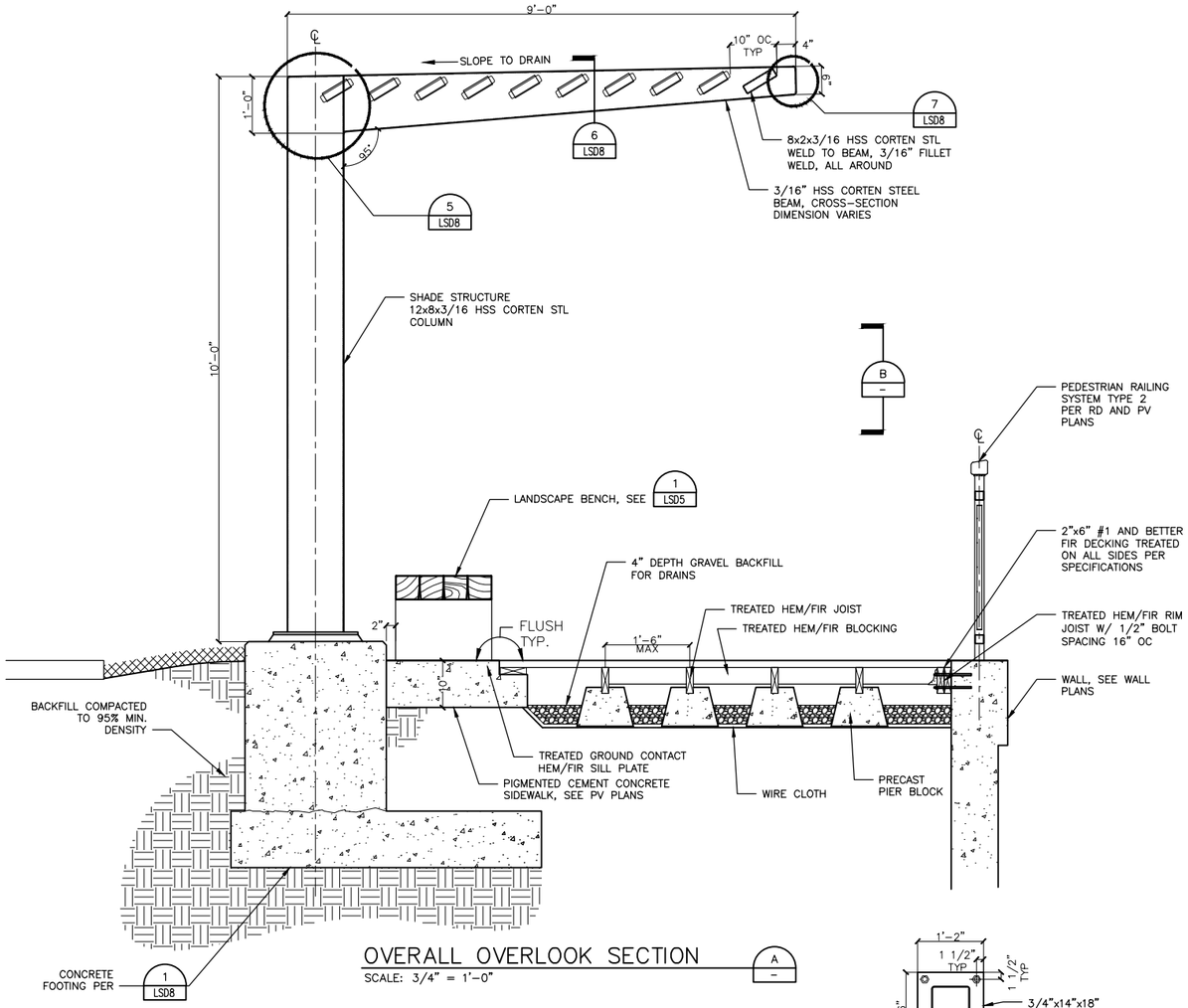

OVERALL OVERLOOK SECTION A
SCALE: 3/4" = 1'-0"

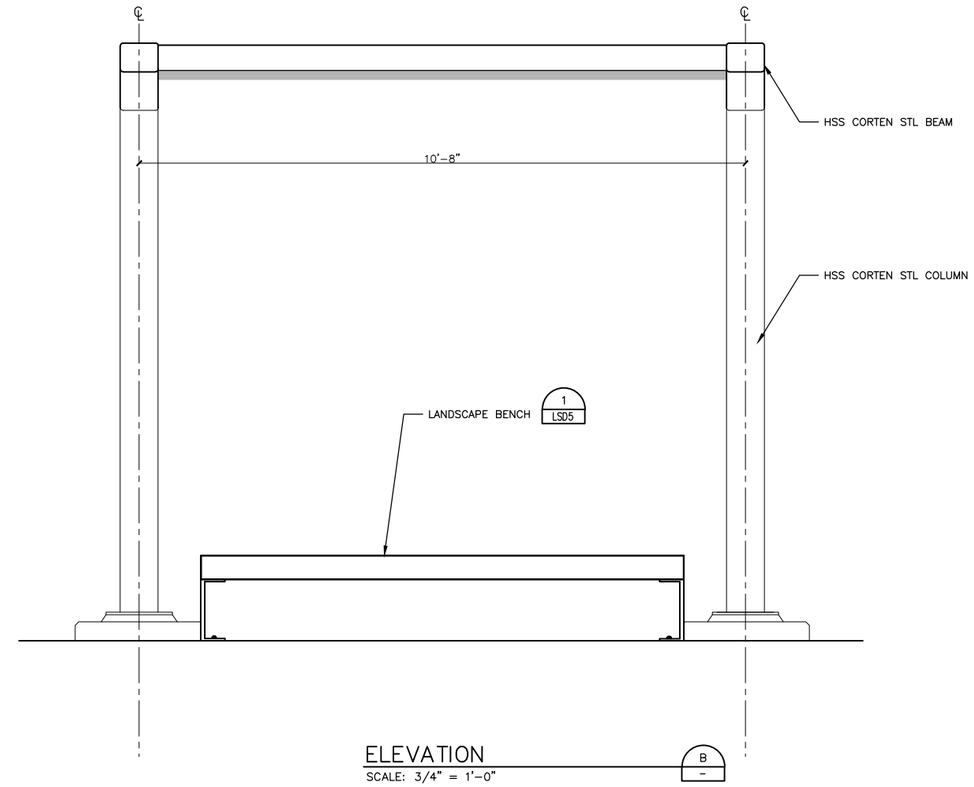

ELEVATION B
SCALE: 3/4" = 1'-0"

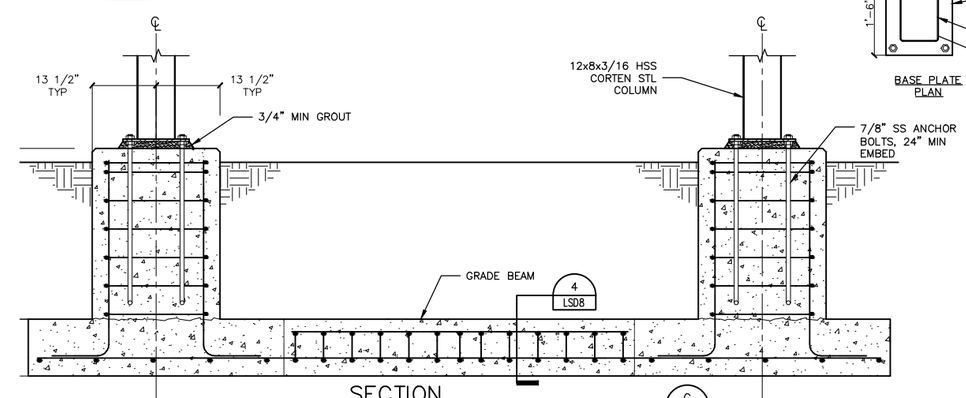

SECTION C
SCALE: 3/4" = 1'-0"

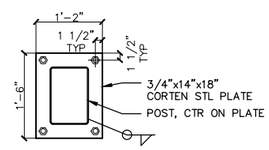

BASE PLATE PLAN

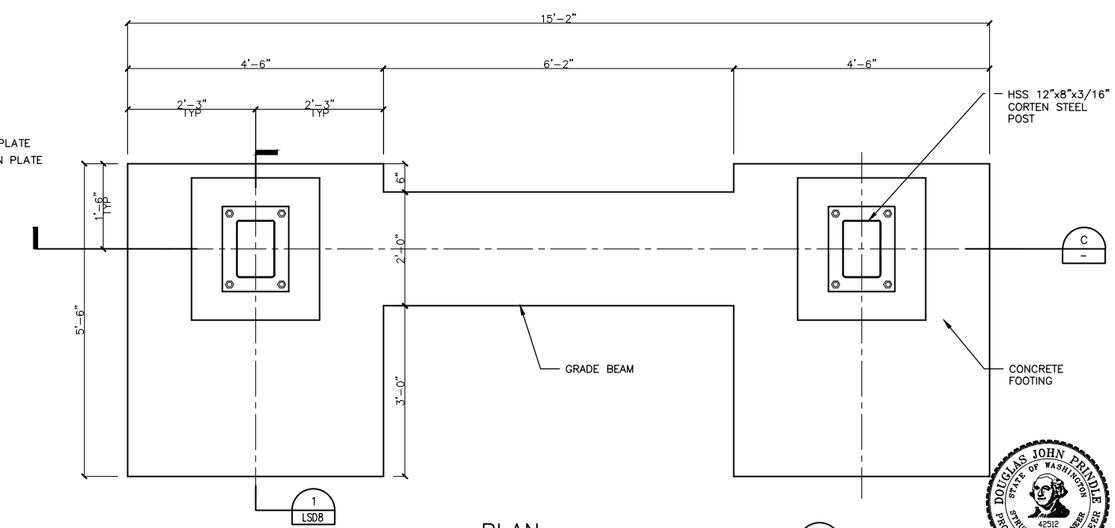

PLAN D
SCALE: 3/4" = 1'-0"

STATE OF WASHINGTON LICENSED LANDSCAPE ARCHITECT

MATTHEW C. GURRAD
LICENSE NO. 1094
EXPIRES ON _____

NO.	DATE	BY	APPR.	REVISIONS

Approved By

TRANSPORTATION DESIGN MANAGER — DATE
M. ARAKELYAN
PROJECT MANAGER — DATE

M. GURRAD — DESIGNED BY — DATE
J. FRYE — DRAWN BY — DATE
L. PATY — CHECKED BY — DATE

City of Bellevue
TRANSPORTATION DEPARTMENT

HDR

124th Ave NE - NE Spring Blvd to NE Ichigo Way

OVERLOOK URBAN ELEMENTS DESIGN DETAILS

SHEET NAME **LSD7**

SHT 116 OF 198

95% SUBMITTAL NOT FOR CONSTRUCTION

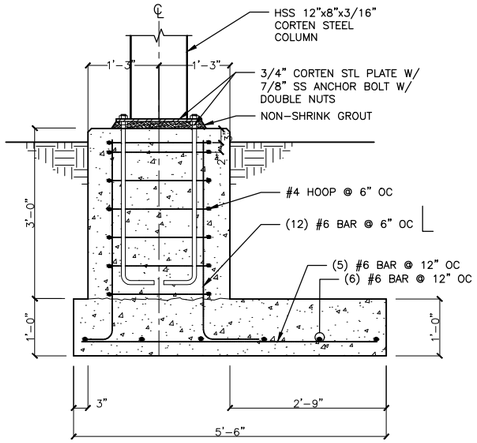

SECTION 1 LSD7
SCALE: 3/4" = 1'-0"

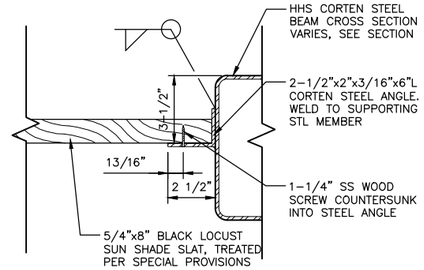

DETAIL 2 LSD7
SCALE: 3" = 1'-0"

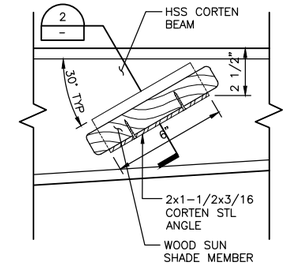

DETAIL 3 LSD7
SCALE: 3" = 1'-0"

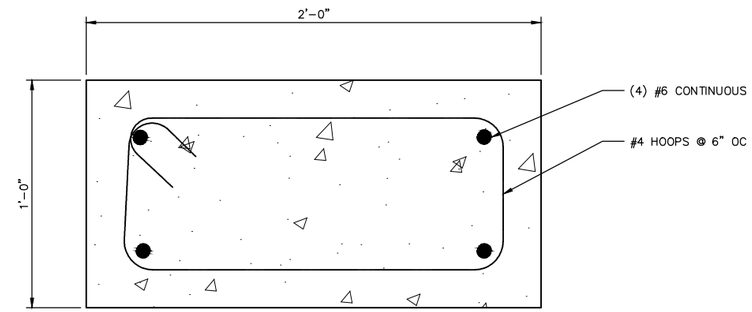

DETAIL 4 LSD7
SCALE: 3" = 1'-0"

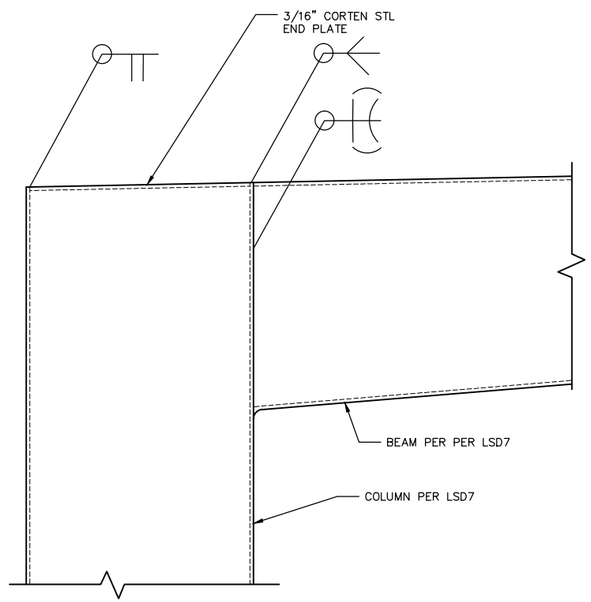

DETAIL 5 LSD7
SCALE: 3" = 1'-0"

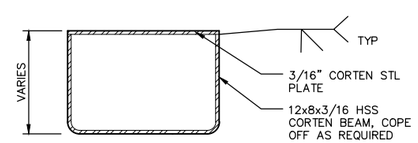

DETAIL 6 LSD7
SCALE: 3" = 1'-0"

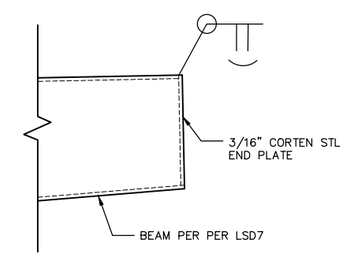

DETAIL 7 LSD7
SCALE: 3" = 1'-0"

STATE OF WASHINGTON LICENSED LANDSCAPE ARCHITECT

MATTHEW C. GURRAD
LICENSE NO. 1094
EXPIRES ON _____

NO.	DATE	BY	APPR.	REVISIONS

Approved By

TRANSPORTATION DESIGN MANAGER — DATE
M. ARAKELYAN
PROJECT MANAGER — DATE

M. GURRAD — DESIGNED BY — DATE
J. FRYE — DRAWN BY — DATE
L. PATY — CHECKED BY — DATE

City of Bellevue
TRANSPORTATION DEPARTMENT

124th Ave NE - NE Spring Blvd to NE Ichigo Way

OVERLOOK URBAN ELEMENTS DESIGN DETAILS

SHEET NAME **LSD8**

SHT 117 OF 198

95% SUBMITTAL NOT FOR CONSTRUCTION

RETAINING WALL ABBREVIATIONS

A.P. – ANGLE POINT
CDF – CONTROLLED DENSITY FILL
CIP – CAST IN PLACE
CLR – CLEAR
DIA. – DIAMETER
CONC. – CONCRETE
E.J. – EXPANSION JOINT
ELEV. – ELEVATION
LOL – LAYOUT LINE
LT – LEFT
N.T.S. – NOT TO SCALE
REINF. – REINFORCING
RT – RIGHT
SE WALL/ SEW – STRUCTURAL EARTH WALL
SPA. – SPACE
STA./STA – STATION
TYP – TYPICAL
U.N.O. – UNLESS NOTED OTHERWISE
V.A.P. – VERTICAL ANGLE POINT

RETAINING WALL GENERAL NOTES:

1. STRUCTURES HAVE BEEN DESIGNED IN ACCORDANCE WITH THE REQUIREMENTS OF THE AASHTO LRFD BRIDGE DESIGN SPECIFICATIONS SEVENTH EDITION 2014 AND INTERIMS THROUGH 2015.
2. ALL MATERIALS AND WORKMANSHIP SHALL BE IN ACCORDANCE WITH THE REQUIREMENTS OF THE WASHINGTON STATE DEPARTMENT OF TRANSPORTATION STANDARD SPECIFICATION FOR ROAD, BRIDGE, AND MUNICIPAL CONSTRUCTION, DATED 2014, AND AS MODIFIED OR SUPPLEMENTED BY THE SPECIAL PROVISIONS AND AMENDMENTS.
3. REINFORCING STEEL SHALL BE DEFORMED BARS AND SHALL CONFORM TO THE REQUIREMENTS OF ASTM A706 (Fy=60 ksi) OR ASTM A615 (Fy=60 ksi).
4. UNLESS OTHERWISE SHOWN IN THE PLANS, THE CONCRETE COVER MEASURED FROM THE FACE OF THE CONCRETE TO THE FACE OF ANY REINFORCING STEEL SHALL BE 2".
5. UNLESS OTHERWISE NOTED, ALL DIMENSIONS ARE IN FEET AND INCHES.
6. ALL DIMENSIONS ARE HORIZONTAL AND VERTICAL, UNLESS OTHERWISE SHOWN
7. CONTRACTOR SHALL PROVIDE A TEST MOCKUP PANEL OF THE ARCHITECTURAL FASCIA PATTERN FOR REVIEW PRIOR TO BEGINNING WORK. TEST PANELS SHALL BE 5' X 5' MINIMUM. SEE SPECIAL PROVISIONS.
7. ALL CONCRETE SHALL BE CONCRETE CL 4000 U.N.O.
8. UNDERDRAIN PIPE SHALL CONSIST OF A 6–INCH DIAMETER (MINIMUM), PERFORATED PVC SDR 35 PIPE.
9. THE GROUND LINE AT TOP OF WALL IS NOT MEANT TO BE STRAIGHT–LINED WHERE THE PROFILE INCLUDES A VERTICAL CURVE. THE CONTRACTOR SHALL DETERMINE THE FINISHED GROUND LINES BETWEEN THOSE GIVEN IN THE PLANS, FROM THE ROADWAY PROFILE AND SUPERELEVATION DIAGRAMS.
10. EXISTING GROUND LINE IS APPROXIMATE AND SHALL BE VERIFIED BY THE CONTRACTOR IN THE FIELD PRIOR TO CONSTRUCTION.
11. WALL QUANTITIES SHOWN ON THE PLANS ARE FOR THE CONVENIENCE OF THE CONTRACTOR IN DETERMINING THE VOLUME OF WORK INVOLVED FOR EACH RETAINING WALL. THE CONTRACTOR SHALL USE THE QUANTITIES SHOWN AT HIS OWN RISK.

STRUCTURAL EARTH WALL NOTES:

1. SE WALLS SHALL BE DESIGNED BY THE CONTRACTOR. WORKING DRAWINGS AND CALCULATIONS SHALL BE SUBMITTED FOR REVIEW IN ACCORDANCE WITH THE SPECIFICATIONS.
2. THE CONTRACTOR SHALL BE RESPONSIBLE FOR ALL WORK INCIDENTAL TO THE CONSTRUCTION OF THE WALL WHICH INCLUDES AT MINIMUM, BUT NOT LIMITED TO, THE DESIGN, FURNISHING, AND INSTALLATION OF THE FOLLOWING ITEMS:
   - CONCRETE BLOCK FACING TO THE LIMITS SHOWN IN THE PLANS.
   - SOIL REINFORCING (LENGTH, MATERIAL, CONNECTIONS, # OF LIFTS, ETC.)
   - SOIL REINFORCING DESIGN AND DETAILS AROUND UTILITY VAULTS, UTILITY CONDUITS, PLANTER BOXES, SIGNAL POLES AND FOUNDATIONS AND ALL OTHER OBSTRUCTIONS.
   - DESIGN AND DETAILING OF PENETRATIONS THROUGH THE WALL FACE.
   - LAYOUT OF THE WALL UNDERDRAIN PIPES AND CONNECTION TO THE SITE STORM DRAINAGE SYSTEM.
   - UNREINFORCED CONCRETE LEVELING PAD PER THE WSDOT STANDARD SPECIFICATIONS AND THE WALL MANUFACTURER'S RECOMMENDATIONS.
   - CONCRETE CAP BLOCKS, CIP TOP LEVELING STRIP, CIP COPING WITH SIDEWALK WHERE SHOWN ON THE PLANS.
   - PEDESTRIAN RAILINGS, GUARDRAILS, CONCRETE BARRIERS, AND CONCRETE BARRIER WITH MOMENT SLABS. (SHAPE, STYLE, SIZE, & LOCATION SHALL BE AS SHOWN IN THE PLANS.)
3. SE WALLS WITH BLOCK FACING SHALL USE THE MANUFACTURER'S NEAR VERTICAL WALL SYSTEM.
4. ELEVATIONS AT THE BOTTOM OF WALL MAY BE ADJUSTED TO FIT BUT SHALL BE NO HIGHER THAN SHOWN.

SOLDIER PILE WALL NOTES:

1. SOLDIER PILE SHAFTS SHALL BE FILLED WITH CONTROLLED DENSITY FILL (CDF) WHEN PLACED IN THE DRY. USE PUMPABLE LEAN CONCRETE WHEN PLACED IN THE WET.
2. SOLDIER PILES SHALL BE PAINTED TO THE LIMITS SHOWN IN THE PLANS WITH 1 COAT OF INORGANIC ZINC PRIMER IN ACCORDANCE WITH THE STANDARD SPECIFICATIONS.
3. W SECTION STEEL SOLDIER PILES SHALL CONFORM TO ASTM A992. HP STEEL SOLDIER PILE SECTIONS SHALL CONFORM TO ASTM A572 GRADE 50.
4. ALL WELDING SHALL BE DONE TO MINIMIZE DISTORTION. THE WELDING SEQUENCES AND PROCEDURES TO BE USED SHALL BE SUBMITTED TO THE ENGINEER FOR APPROVAL PRIOR TO THE START OF WELDING.
5. TIMBER LAGGING SHALL BE DESIGNED BY THE CONTRACTOR AND SUBMITTED TO THE ENGINEER FOR APPROVAL IN ACCORDANCE WITH STANDARD SPECIFICATION SECTION 6–16.3(6).
6. PREFABRICATED DRAINAGE MATS SHALL BE 4'–0" WIDE BY FULL LAGGED HEIGHT AND CENTERED BETWEEN SOLDIER PILE FLANGES. TAPE EDGES TO PREVENT CONCRETE INFILTRATION.

GRAVITY BLOCK WALL NOTES:

1. CONCRETE FOR GRAVITY BLOCKS SHALL BE CONCRETE CLASS 3000 MINIMUM.
2. CONTRACTOR SHALL SUBMIT WORKING DRAWINGS IN ACCORDANCE WITH SECTION 8–24 AND THE SPECIAL PROVISIONS.
3. CONTRACTOR SHALL BE RESPONSIBLE FOR THE STABILITY OF ALL EXCAVATED SLOPES ASSOCIATED WITH THE CONSTRUCTION OF THESE WALLS. DESIGN AND CONSTRUCTION OF ANY REQUIRED TEMPORARY SUPPORT OR SHORING SHALL ALSO BE THE RESPONSIBILITY OF THE CONTRACTOR.

CONSTRUCTION NOTES FOR WP SHEETS:

(1) EXISTING UNDERGROUND UTILITIES, STORM DRAIN, WATER LINE, SEWER LINE, POWER LINE, ETC. SEE RESPECTIVE DISCIPLINE SHEETS FOR DETAILS ON REMOVAL OR RELOCATION.

(2) STORM DRAIN LINE, CATCH BASIN, PLANTER BOX, INLET STRUCTURE, OR DETENTION VAULT, SEE DRAINAGE SHEETS FOR DETAILS.

(3) UNDERGROUND UTILITIES OR UTILITY VAULTS. SEE UTILITY SHEETS FOR DETAILS.

(4) LIGHTING, ELECTRICAL OR SIGNAGE, SEE ILLUMINATION AND SIGNING SHEETS.

(5) WATER LINE, OR WATER METER, SEE WATER MAIN SHEETS FOR DETAILS.

(6) APPROXIMATE LIMITS OF WALL REINF.

(7) APPROXIMATE LOCATION OF WALL UNDERDRAIN.

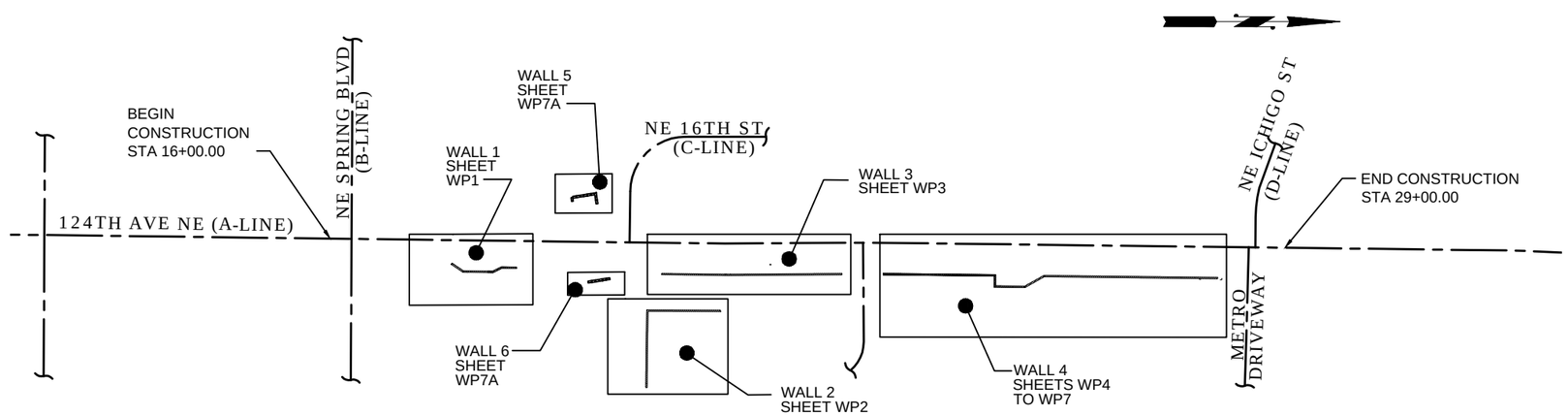

RETAINING WALL KEY PLAN
N.T.S.

NO.	DATE	BY	APPR.	REVISIONS

Approved By
TRANSPORTATION DESIGN MANAGER — DATE
M. ARAKELYAN
PROJECT MANAGER — DATE

J. VO — DESIGNED BY — DATE
J. FRYE — DRAWN BY — DATE
D. KORPI — CHECKED BY — DATE

City of Bellevue
TRANSPORTATION DEPARTMENT

124th Ave NE - NE Spring Blvd to NE Ichigo Way

RETAINING WALL NOTES & KEY PLAN

SHEET NAME WPN1

SHT 122 OF 198

SECTION 28, T. 25 N., R5E., W.M.
KING COUNTY

95% SUBMITTAL NOT FOR CONSTRUCTION

GENERAL NOTES:

1. SEE SHEET WPN1 FOR STRUCTURE NOTES.
2. THE QUANTITIES LISTED BELOW ARE FOR THE CONVENIENCE OF THE CONTRACTOR IN DETERMINING THE VOLUME OF WORK INVOLVED FOR THIS RETAINING WALL. THE CONTRACTOR SHALL USE THE QUANTITIES SHOWN AT HIS OWN RISK.
3. CONTRACTOR SHALL DESIGN AND DETAIL RETAINING WALL REINFORCING AROUND OBSTRUCTION PER BLOCK WALL MANUFACTURER'S RECOMMENDATIONS.

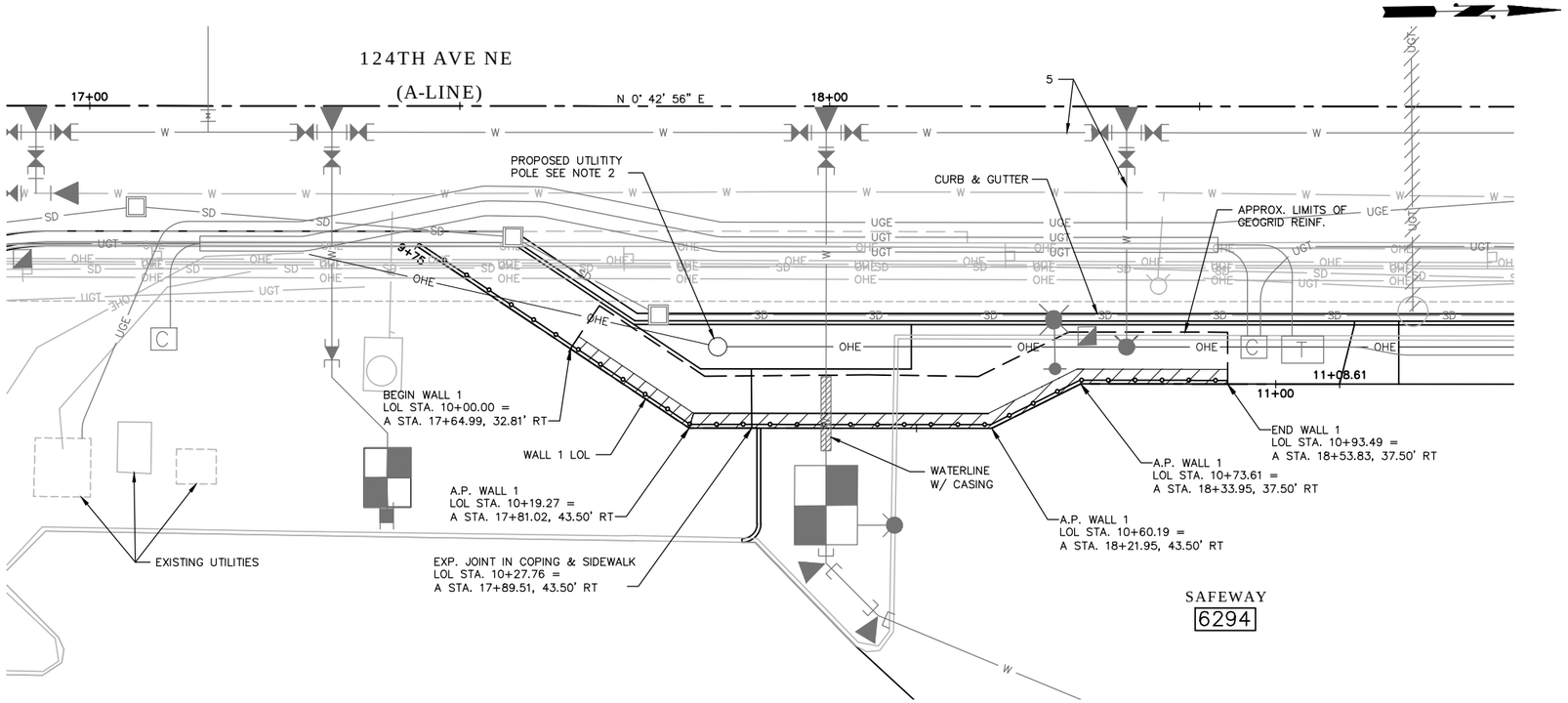

WALL 1 PLAN – STRUCTURAL EARTH WALL

WALL 1 – APPROXIMATE QUANTITIES	
WALL AREA (S.F.)	480
STRUCTURE EXCAVATION CLASS A INCL. HAUL (C.Y.)	33
GRAVEL BORROW FOR STRUCTURAL EARTH WALL INCL. HAUL (C.Y.)	91
WALL UNDERDRAIN (L.F.)	94

APPROXIMATE QUANTITIES SHOWN. SEE NOTES.

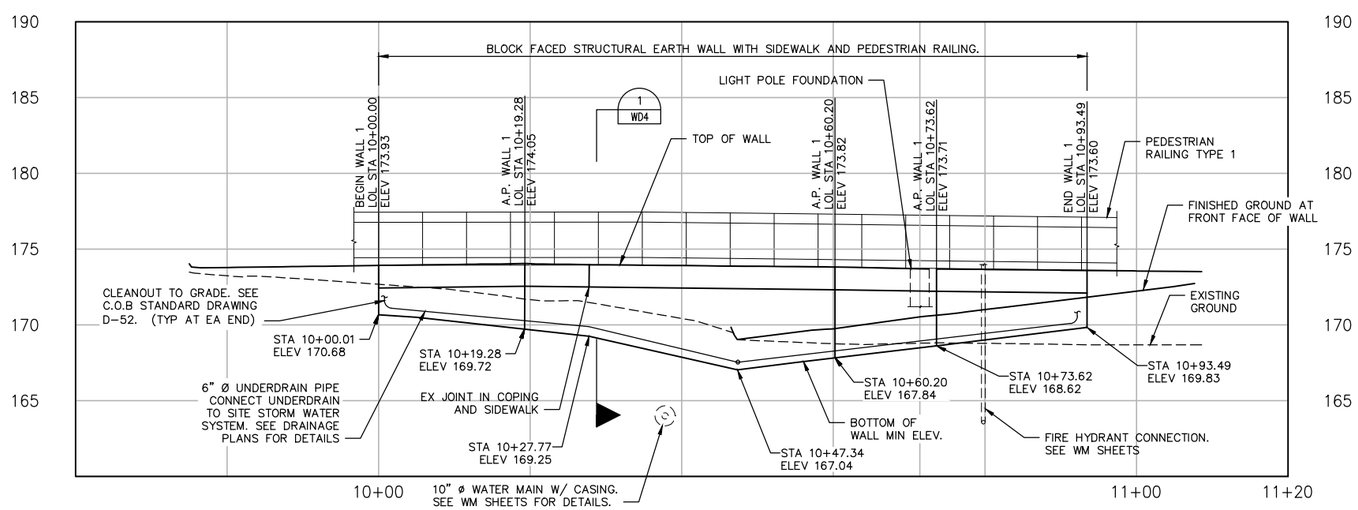

WALL 1 DEVELOPED ELEVATION – STRUCTURAL EARTH WALL

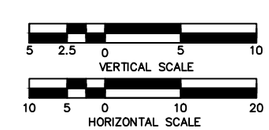

NO.	DATE	BY	APPR.	REVISIONS

Approved By

TRANSPORTATION DESIGN MANAGER M. ARAKELYAN DATE
PROJECT MANAGER DATE

J. VO DESIGNED BY DATE
J. FRYE DRAWN BY DATE
J. LEM CHECKED BY DATE

City of Bellevue
TRANSPORTATION DEPARTMENT

HDR

124th Ave NE - NE Spring Blvd to NE Ichigo Way

RETAINING WALL 1
PLAN & ELEVATION

SHEET NAME WP1

SHT 123 OF 198

SECTION 28, T. 25 N., R5E., W.M.
KING COUNTY

95% SUBMITTAL NOT FOR CONSTRUCTION

GENERAL NOTES:

1. SEE SHEET WPN1 FOR STRUCTURE NOTES.
2. THE QUANTITIES LISTED BELOW ARE FOR THE CONVENIENCE OF THE CONTRACTOR IN DETERMINING THE VOLUME OF WORK INVOLVED FOR THIS RETAINING WALL. THE CONTRACTOR SHALL USE THE QUANTITIES SHOWN AT HIS OWN RISK.

WALL 2 – APPROXIMATE QUANTITIES	
CIP STEM WALL AREA (S.F.)	1208
STRUCTURE EXCAVATION CLASS A INCL. HAUL (C.Y.)	149
GRAVEL BACKFILL FOR WALL (C.Y.)	195
CONCRETE CL 4000 (C.Y.)	97
ST. REINF BAR (LB)	9000

QUANTITIES SHOWN ARE APPROXIMATE. SEE NOTES.

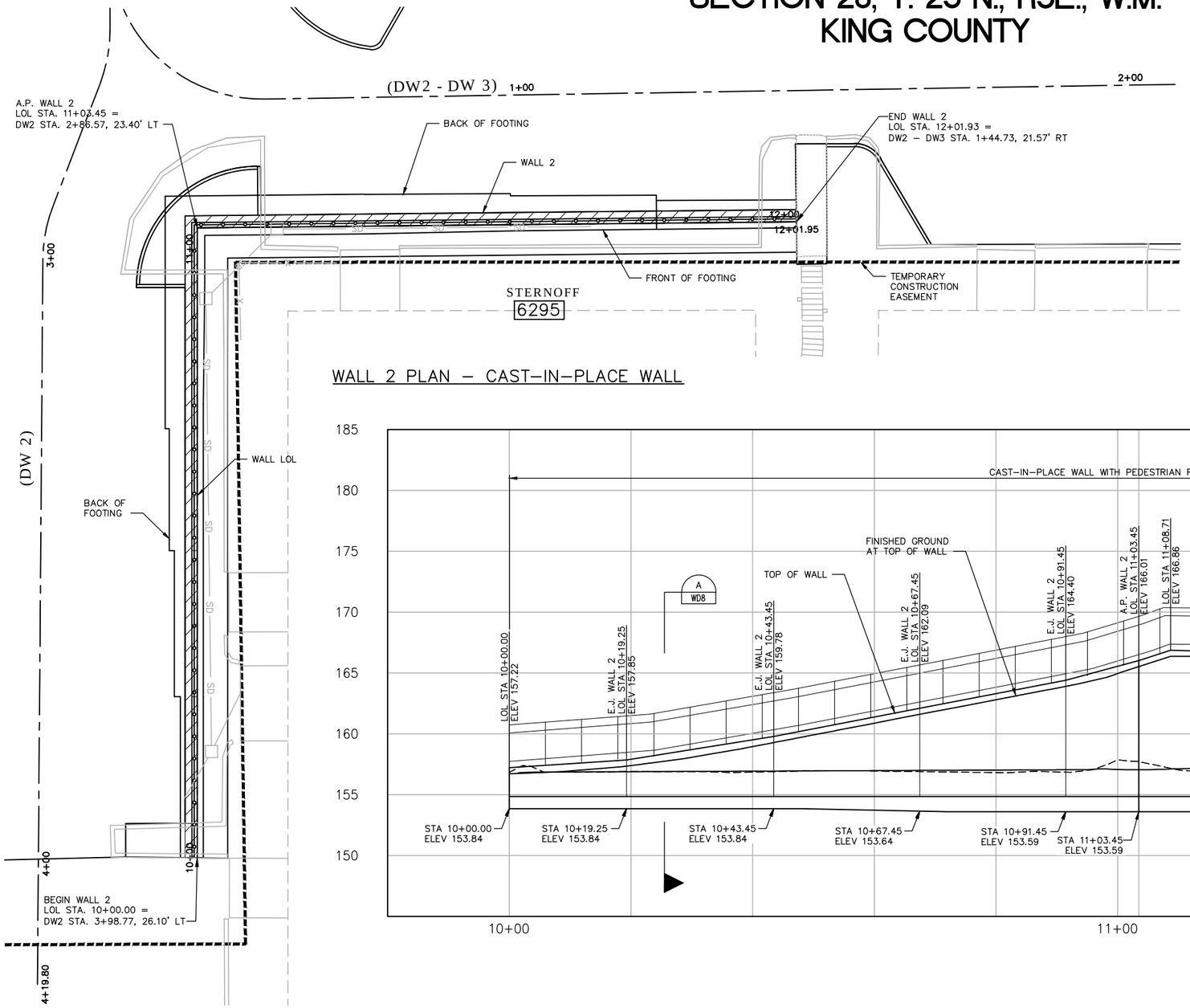

WALL 2 PLAN – CAST-IN-PLACE WALL

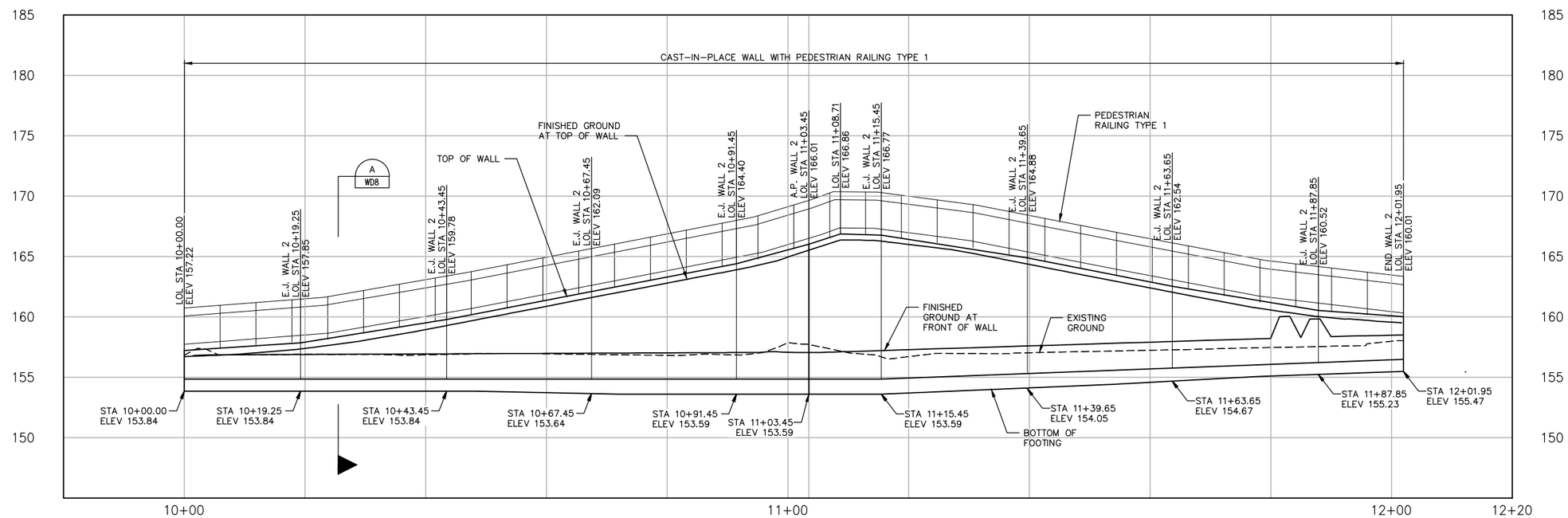

WALL 2 DEVELOPED ELEVATION – CAST-IN-PLACE WALL

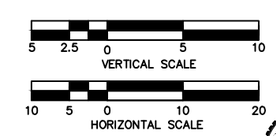

NO.	DATE	BY	APPR.	REVISIONS

Approved By

TRANSPORTATION DESIGN MANAGER — DATE
M. ARAKELYAN
PROJECT MANAGER — DATE

J. VO — DESIGNED BY — DATE
J. FRYE — DRAWN BY — DATE
J. LEM — CHECKED BY — DATE

City of Bellevue
TRANSPORTATION DEPARTMENT

HDR

124th Ave NE - NE Spring Blvd to NE Ichigo Way

RETAINING WALL 2 PLAN & ELEVATION

SHEET NAME **WP2**

SHT 124 OF 198

GENERAL NOTES:

1. SEE SHEET WPN1 FOR STRUCTURE NOTES.
2. THE QUANTITIES LISTED BELOW ARE FOR THE CONVENIENCE OF THE CONTRACTOR IN DETERMINING THE VOLUME OF WORK INVOLVED FOR THIS RETAINING WALL. THE CONTRACTOR SHALL USE THE QUANTITIES SHOWN AT HIS OWN RISK.
3. CONTRACTOR SHALL DESIGN AND DETAIL RETAINING WALL REINFORCING AROUND OBSTRUCTION PER BLOCK WALL MANUFACTURER'S RECOMMENDATIONS.

SECTION 28, T. 25 N., R5E., W.M.
KING COUNTY

95% SUBMITTAL NOT FOR CONSTRUCTION

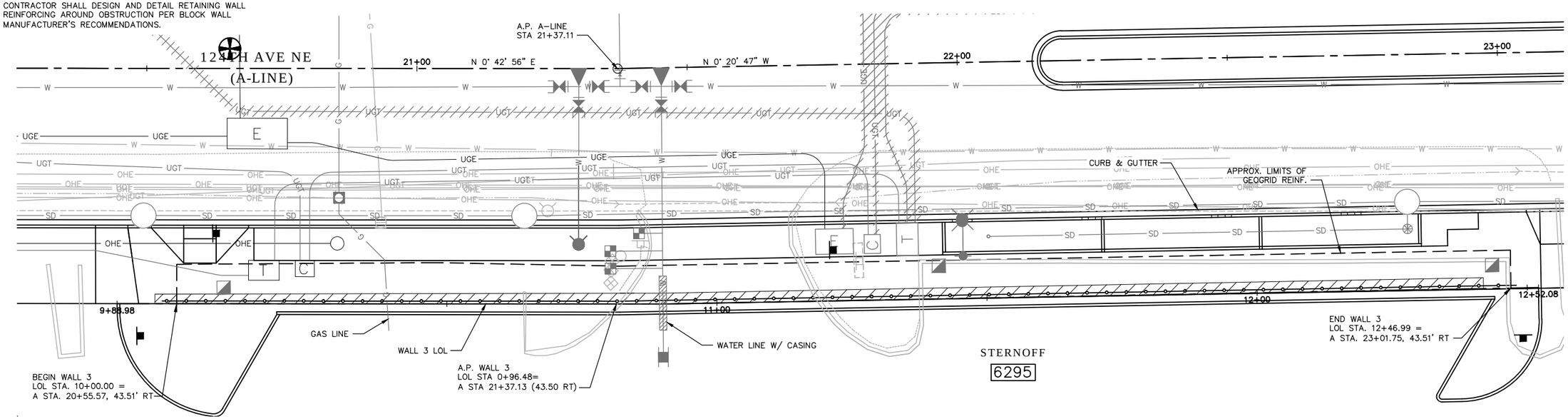

WALL 3 PLAN – STRUCTURAL EARTH WALL

WALL 3 – APPROXIMATE QUANTITIES	
WALL AREA (S.F.)	1500
STRUCTURAL EXCAVATION CLASS A INC. HAUL (C.Y.)	153
GRAVEL BORROW FOR STRUCTURAL EARTH WALL INCL. HAUL (C.Y.)	332
WALL UNDERDRAIN (L.F.)	247

QUANTITIES SHOWN ARE APPROXIMATE. SEE NOTES.

5 2.5 0 5 10
VERTICAL SCALE

10 5 0 10 20
HORIZONTAL SCALE

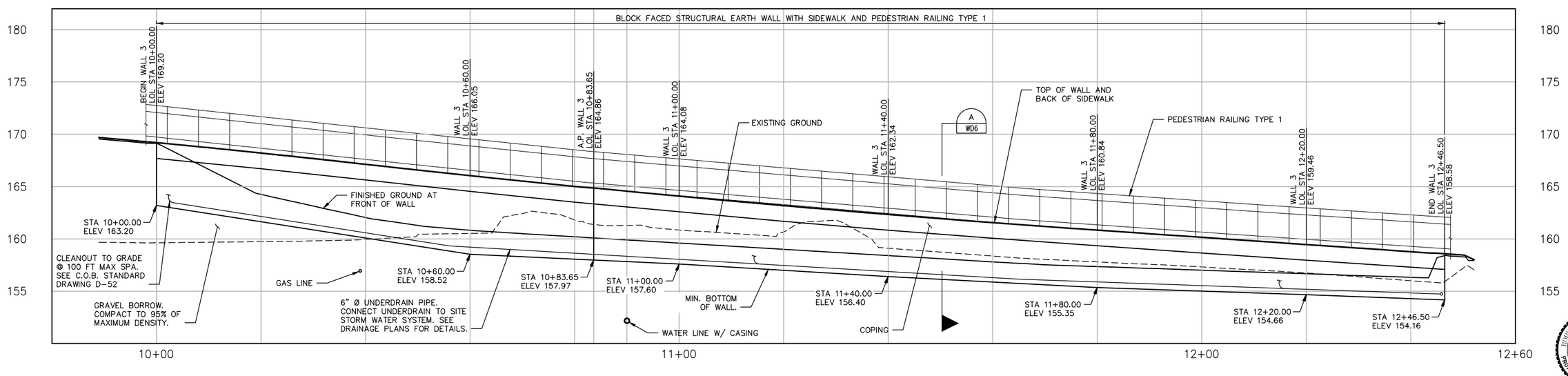

WALL 3 DEVELOPED ELEVATION – STRUCTURAL EARTH WALL

NO.	DATE	BY	APPR.	REVISIONS

Approved By

TRANSPORTATION DESIGN MANAGER — DATE
M. ARAKELYAN
PROJECT MANAGER — DATE

J. VO — DESIGNED BY — DATE
J. FRYE — DRAWN BY — DATE
J. LEM — CHECKED BY — DATE

City of Bellevue
TRANSPORTATION DEPARTMENT

HDR

124th Ave NE - NE Spring Blvd to NE Ichigo Way

RETAINING WALL 3
PLAN & ELEVATION

SHEET NAME WP3

SHT 125 OF 198

SECTION 28, T. 25 N., R5E., W.M.
KING COUNTY

95% SUBMITTAL NOT FOR CONSTRUCTION

GENERAL NOTES:

1. SEE SHEET WPN1 FOR STRUCTURE NOTES.
2. FOR UTILITY LOCATION AND DETAILS SEE UT SHEETS.
3. CONTRACTOR SHALL COORDINATE WALL CONSTRUCTION WITH UTILITY VAULT INSTALLATION.

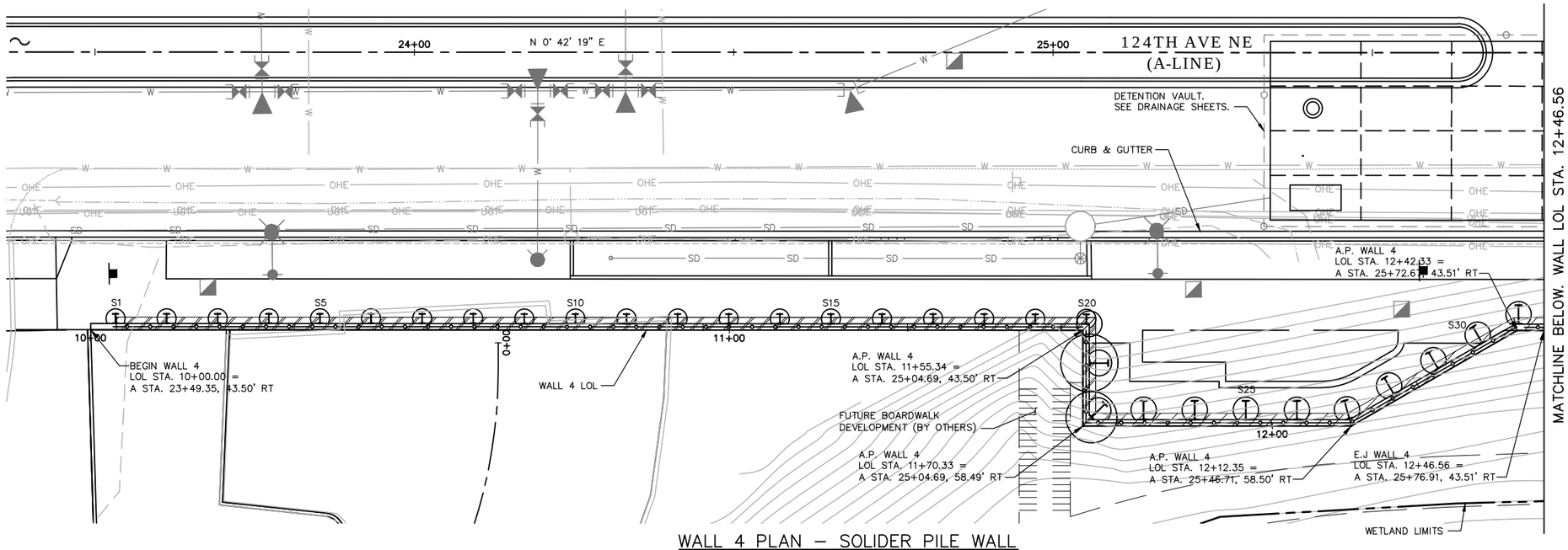

WALL 4 PLAN – SOLIDER PILE WALL

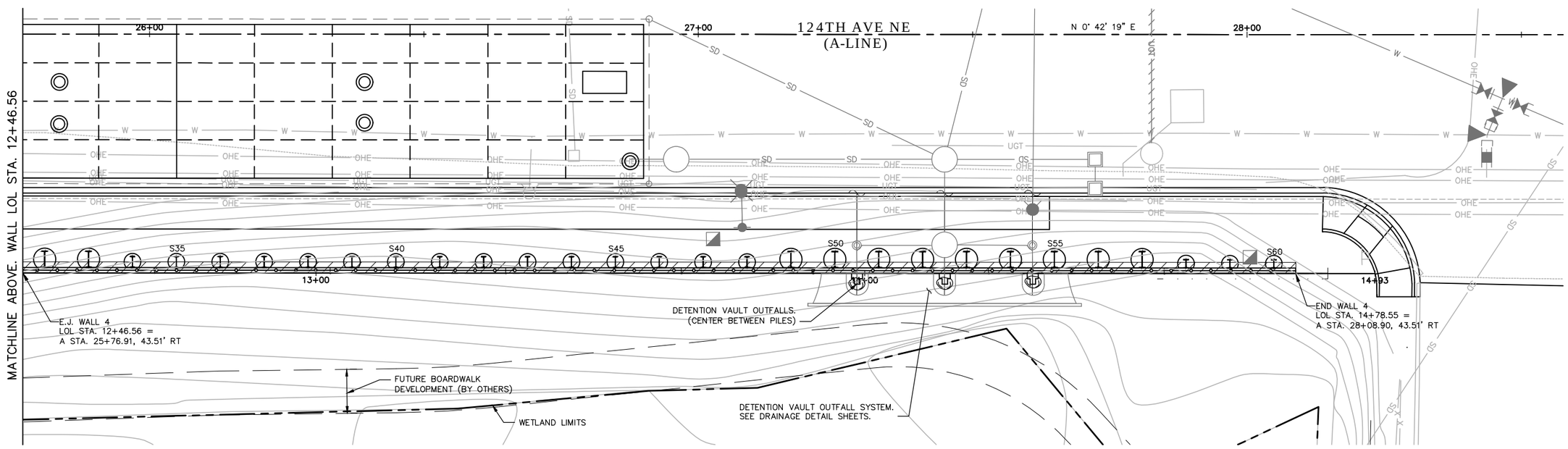

WALL 4 PLAN – SOLIDER PILE WALL (CONTINUED)

10 5 0 10 20
HORIZONTAL SCALE

NO.	DATE	BY	APPR.	REVISIONS

Approved By

TRANSPORTATION DESIGN MANAGER — DATE
M. ARAKELYAN
PROJECT MANAGER — DATE

J. VO — DESIGNED BY — DATE
J. FRYE — DRAWN BY — DATE
J. LEM — CHECKED BY — DATE

City of Bellevue
TRANSPORTATION DEPARTMENT

HDR

124th Ave NE - NE Spring Blvd to NE Ichigo Way

RETAINING WALL 4
PLAN

SHEET NAME WP4

SHT 126 OF 198

95% SUBMITTAL NOT FOR CONSTRUCTION

GENERAL NOTES:

1. SEE SHEET WPN1 FOR STRUCTURE NOTES.
2. U.N.O ALL DIMENSIONS ARE IN FEET.
3. HORIZONTAL DIMENSIONS ARE MEASURED ALONG WALL LAYOUT LINE.
4. PEDESTRIAN RAILING SHOWN ON WALLS IS APPROXIMATE ONLY. SEE PAVING PLANS FOR COMPLETE RAILING LIMITS.

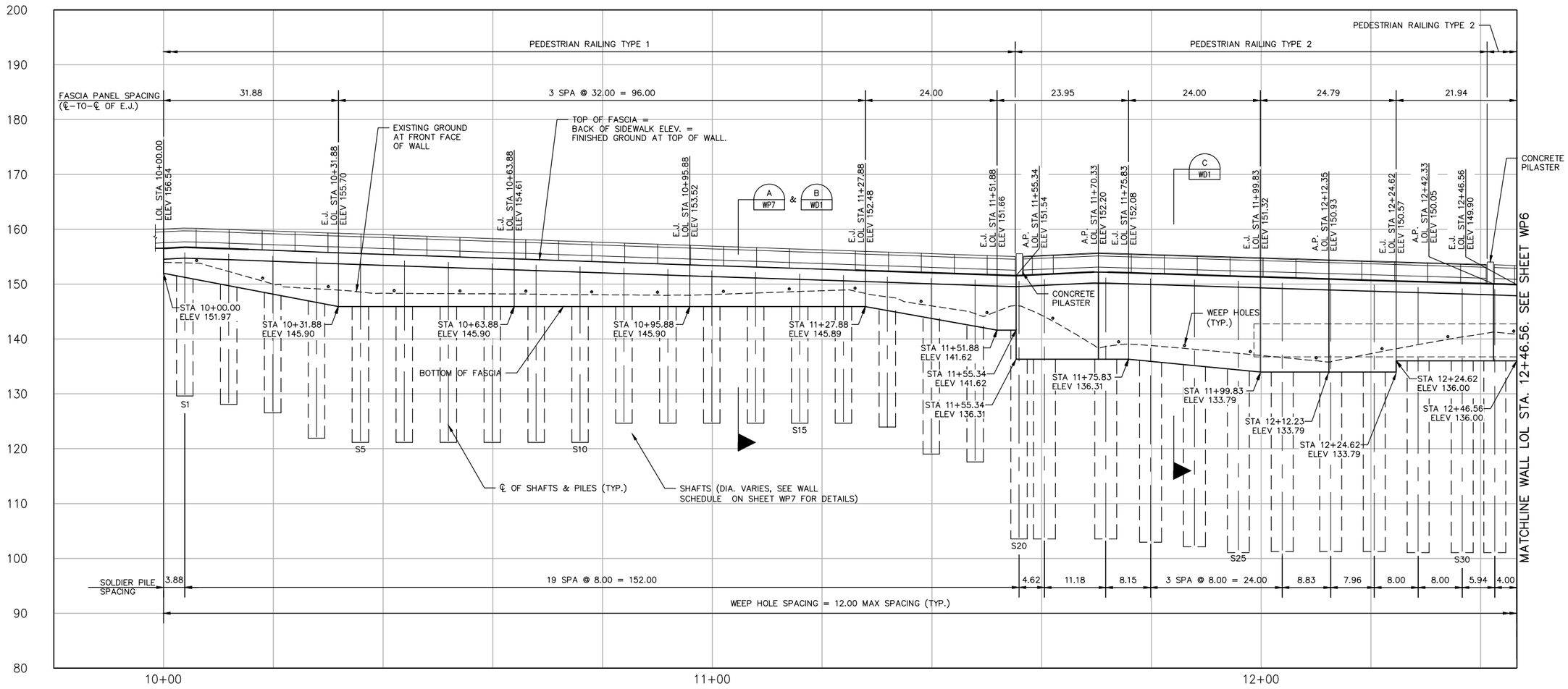

WALL 4 DEVELOPED ELEVATION – SOLDIER PILE WALL

10 5 0 10 20
HORIZONTAL & VERTICAL SCALE

NO.	DATE	BY	APPR.	REVISIONS

Approved By

TRANSPORTATION DESIGN MANAGER — DATE
M. ARAKELYAN
PROJECT MANAGER — DATE

J. VO — DESIGNED BY — DATE
J. FRYE — DRAWN BY — DATE
J. LEM — CHECKED BY — DATE

City of Bellevue
TRANSPORTATION DEPARTMENT

HDR

124th Ave NE - NE Spring Blvd to NE Ichigo Way

RETAINING WALL 4
PLAN & ELEVATION

SHEET NAME WP5

GENERAL NOTES:

1. SEE SHEET WPN1 FOR STRUCTURE NOTES.
2. U.N.O. ALL DIMENSIONS ARE IN FEET.
3. HORIZONTAL DIMENSIONS ARE MEASURED ALONG WALL LAYOUT LINE.

95% SUBMITTAL NOT FOR CONSTRUCTION

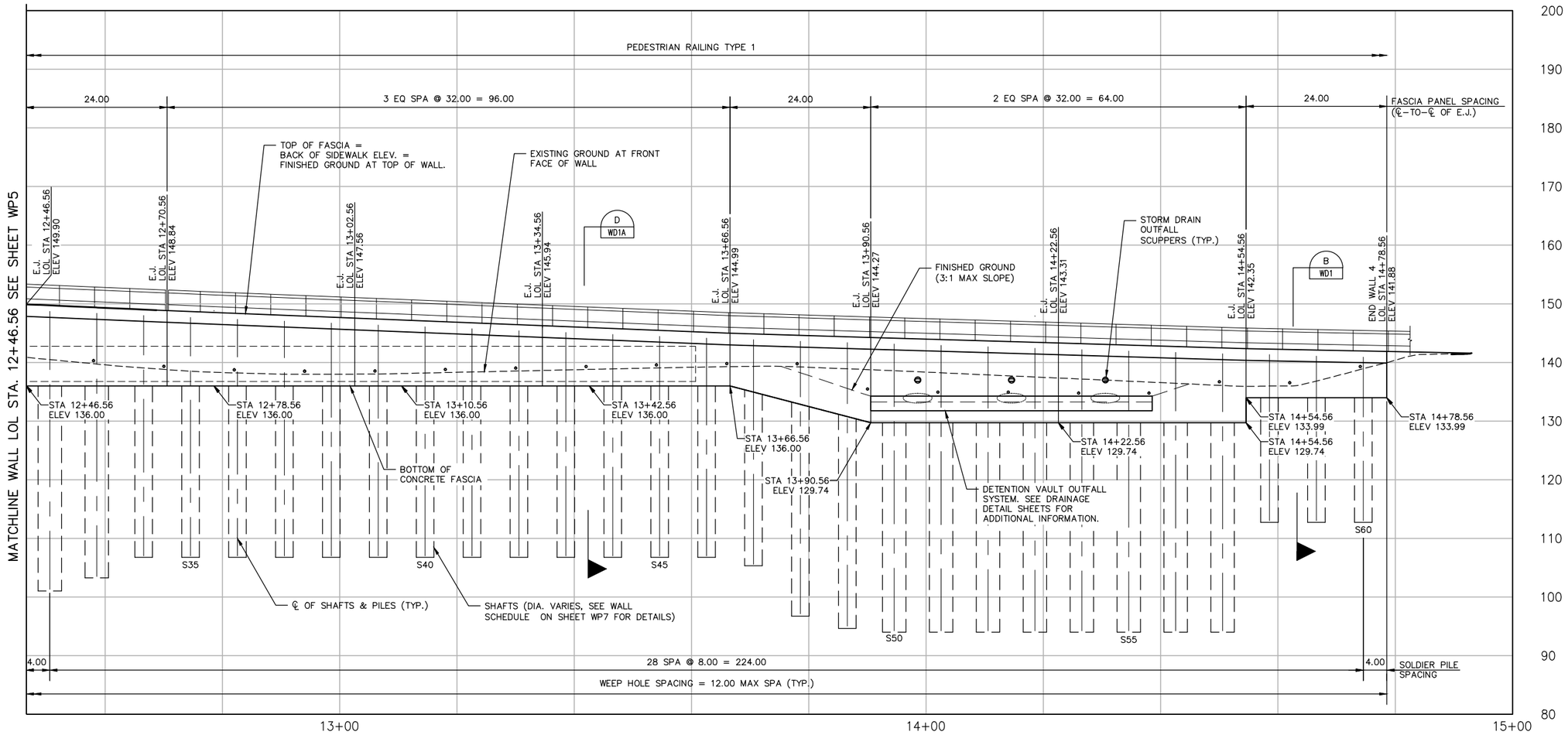

WALL 4 DEVELOPED ELEVATION – SOLDIER PILE WALL (CONTINUED)

10 5 0 10 20
HORIZONTAL AND VERTICAL SCALE

NO.	DATE	BY	APPR.	REVISIONS

Approved By

TRANSPORTATION DESIGN MANAGER — DATE
M. ARAKELYAN
PROJECT MANAGER — DATE

J. VO — DESIGNED BY — DATE
J. FRYE — DRAWN BY — DATE
J. LEM — CHECKED BY — DATE

City of Bellevue
TRANSPORTATION DEPARTMENT

HDR

124th Ave NE - NE Spring Blvd to NE Ichigo Way

RETAINING WALL 4 ELEVATION (CONTINUED)

SHEET NAME WP6

95% SUBMITTAL NOT FOR CONSTRUCTION

GENERAL NOTES:

1. SEE SHEET WPN1 FOR RETAINING WALL STRUCTURE NOTES.
2. SEE WD SHEETS FOR ADDITIONAL SOLDIER PILE DETAILS.
3. LAGGING SHALL BE PLACED WITH 1/4" MINIMUM GAPS BETWEEN EACH LIFT. SHIM OR PROVIDE SPACERS AS NEEDED.
4. THE QUANTITIES LISTED BELOW ARE FOR THE CONVENIENCE OF THE CONTRACTOR IN DETERMINING THE VOLUME OF WORK INVOLVED FOR THIS RETAINING WALL. THE CONTRACTOR SHALL USE THE QUANTITIES SHOWN AT HIS OWN RISK.

TABLE 1 – RECOMMENDED MIN (ROUGH-CUT) LAGGING THICKNESS

LAGGING HEIGHT (ft)	CLEAR SPAN	
	5–8 ft	8–10 ft
0–25	3"	4"

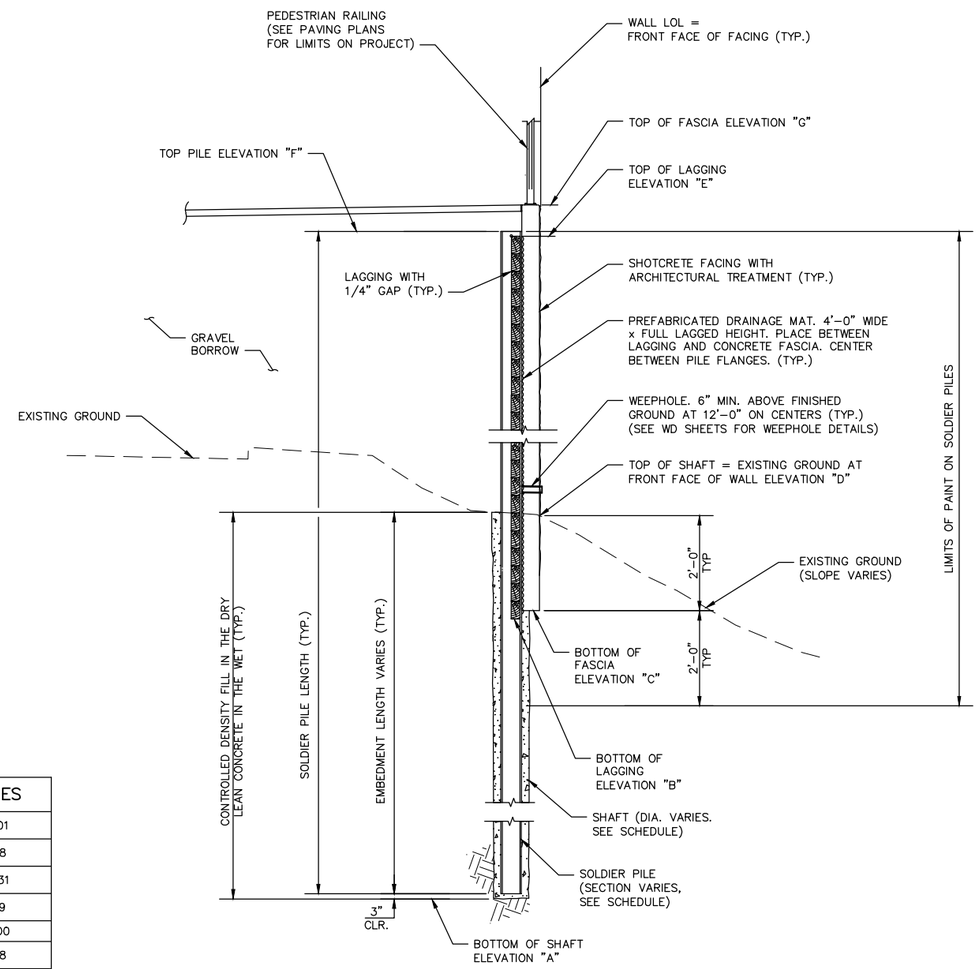

SOLDIER PILE WALL 4
WALL SCHEDULE SECTION

NOT TO SCALE

A
WP5, WP6

(TYPICAL SECTION WITH SIDEWALK AND PEDESTRIAN RAILING SHOWN. FOR OTHER SECTIONS SEE DETAILS ON WD SHEETS)

WALL 4 – APPROXIMATE QUANTITIES

SHAFT – 36" DIA. (FT)	1001
SHAFT – 48" DIA. (FT)	948
LAGGING (S.F.)	5731
PREFABRICATED DRAINAGE MAT (S.Y.)	319
SHOTCRTE FACING (S.F.)	5400
FURNISHING SOLDIER PILE – W18X86 (FT)	648
FURNISHING SOLDIER PILE – W24X103 (FT)	545
FURNISHING SOLDIER PILE – W36X150 (FT)	658
FURNISHING SOLDIER PILE – W36X182 (FT)	479

QUANTITIES SHOWN ARE APPROXIMATE. SEE NOTES.

WALL 4 – SOLDIER PILE WALL SCHEDULE

SOLDIER PILE NO.	WALL LOL STATION	SOLDIER PILE SECTION	SHAFT DIAMETER (FT)	BOTTOM OF SHAFT ELEVATION "A" (FT)	BOTTOM OF LAGGING ELEVATION "B" (FT)	BOTTOM OF FASCIA ELEVATION "C" (FT)	TOP OF SHAFT = EXISTING GROUND AT FRONT FACE OF WALL ELEVATION "D" (FT)	TOP OF LAGGING ELEVATION "E" (FT)	TOP OF PILE ELEVATION "F" (FT)	TOP OF FASCIA ELEVATION "G" (FT)	SOLDIER PILE LENGTH (FT)
S1	10+03.88	W18x86	3	130.0	149.7	151.2	153.9	156.7	155.4	156.4	25.2
S2	10+11.88	W18x86	3	128.5	148.2	149.7	152.3	156.7	155.2	156.2	26.5
S3	10+19.88	W18x86	3	126.9	146.7	148.2	150.0	156.5	155.0	156.0	27.8
S4	10+27.88	W18x86	3	121.9	145.9	146.7	149.2	156.2	154.8	155.8	32.6
S5	10+35.88	W18x86	3	121.2	145.9	145.9	148.6	155.9	154.6	155.6	33.2
S6	10+43.88	W18x86	3	121.2	145.9	145.9	148.3	155.6	154.3	155.3	32.9
S7	10+51.88	W18x86	3	121.2	145.9	145.9	148.3	155.4	154.0	155.0	32.6
S8	10+59.88	W18x86	3	121.2	145.9	145.9	148.2	155.1	153.7	154.7	32.3
S9	10+67.88	W18x86	3	121.2	145.9	145.9	148.2	154.8	153.5	154.5	32.1
S10	10+75.88	W18x86	3	121.2	145.9	145.9	148.1	154.5	153.2	154.2	31.8
S11	10+83.88	W18x86	3	124.7	145.9	145.9	148.0	154.3	152.9	153.9	28.0
S12	10+91.88	W18x86	3	124.7	145.9	145.9	148.0	154.0	152.7	153.7	27.8
S13	10+99.88	W18x86	3	124.6	145.9	145.9	148.1	153.7	152.4	153.4	27.5
S14	11+07.88	W18x86	3	124.6	145.9	145.9	148.4	153.4	152.1	153.1	27.2
S15	11+15.88	W18x86	3	124.6	145.9	145.9	148.7	153.2	151.9	152.9	27.0
S16	11+23.88	W18x86	3	124.6	145.2	145.9	148.9	152.9	151.6	152.6	26.7
S17	11+31.88	W18x86	3	123.9	143.8	145.2	147.5	152.6	151.3	152.3	27.2
S18	11+39.88	W18x86	3	119.0	142.3	143.8	146.1	152.3	151.1	152.1	31.8
S19	11+47.88	W18x86	3	117.6	136.3	142.3	144.7	152.1	150.8	151.8	33.0
S20	11+55.88	W36x150	4	103.6	136.3	136.3	145.8	151.8	150.6	151.6	46.8
S21	11+60.34	W36x150	4	103.6	136.3	136.3	144.1	152.1	150.8	151.8	47.0
S22	11+71.83	W36x150	4	103.6	135.9	136.3	138.7	152.1	151.2	152.2	47.4
S23	11+79.83	W36x150	4	103.2	135.2	135.9	138.8	152.1	151.0	152.0	47.5
S24	11+87.83	W36x150	4	102.4	134.4	135.2	138.1	151.9	150.7	151.7	48.0
S25	11+95.83	W36x150	4	101.7	134.0	134.4	137.4	151.7	150.4	151.4	48.5
S26	12+03.83	W36x150	4	101.3	134.0	134.0	136.6	151.4	150.2	151.2	48.7
S27	12+12.66	W36x150	4	101.3	134.0	134.0	136.2	151.2	149.9	150.9	48.4
S28	12+20.62	W36x150	4	101.3	134.0	134.0	137.5	150.9	149.7	150.7	48.1
S29	12+28.62	W36x150	4	103.3	134.0	136.0	139.0	150.7	149.5	150.5	46.0
S30	12+36.62	W36x150	4	103.3	136.0	136.0	140.4	150.5	149.2	150.2	45.7
S31	12+42.56	W36x150	4	103.3	136.0	136.0	141.0	150.2	149.0	150.0	45.5
S32	12+50.56	W36x150	4	103.3	136.0	136.0	140.5	150.0	148.7	149.7	45.2
S33	12+58.56	W36x150	4	103.3	136.0	136.0	139.7	149.7	148.4	149.4	44.9
S34	12+66.56	W24x103	3	106.8	136.0	136.0	139.1	149.4	148.0	149.0	41.0
S35	12+74.56	W24x103	3	106.8	136.0	136.0	138.5	149.0	147.7	148.7	40.7
S36	12+82.56	W24x103	3	106.8	136.0	136.0	138.2	148.2	147.4	148.4	40.4
S37	12+90.56	W24x103	3	106.8	136.0	136.0	138.0	147.9	147.0	148.0	40.0
S38	12+98.56	W24x103	3	106.8	136.0	136.0	138.0	147.6	146.7	147.7	39.7
S39	13+06.56	W24x103	3	106.8	136.0	136.0	138.0	147.4	146.4	147.4	39.4
S40	13+14.56	W24x103	3	106.8	136.0	136.0	138.2	147.1	146.0	147.0	39.0
S41	13+22.56	W24x103	3	106.8	136.0	136.0	138.4	146.8	145.5	146.5	38.5
S42	13+30.56	W24x103	3	106.8	136.0	136.0	138.5	146.6	145.1	146.1	38.1
S43	13+38.56	W24x103	3	106.8	136.0	136.0	138.7	146.3	144.8	145.8	37.8
S44	13+46.56	W24x103	3	106.8	136.0	136.0	138.9	146.0	144.6	145.6	37.6
S45	13+54.56	W24x103	3	106.8	136.0	136.0	139.1	145.8	144.3	145.3	37.3
S46	13+62.56	W24x103	3	106.8	135.0	136.0	139.2	145.5	144.1	145.1	37.1
S47	13+70.56	W24x103	3	105.7	132.9	135.0	139.3	145.3	143.9	144.9	37.9
S48	13+78.56	W36x182	4	97.1	130.8	132.9	139.2	145.0	143.6	144.6	46.3
S49	13+86.56	W36x182	4	95.0	129.7	130.8	138.9	144.8	143.4	144.4	48.1
S50	13+94.56	W36x182	4	94.0	129.7	129.7	138.6	144.5	143.2	144.2	48.9
S51	14+02.56	W36x182	4	94.0	129.7	129.7	138.2	144.3	142.9	143.9	48.7
S52	14+10.56	W36x182	4	94.0	129.7	129.7	137.9	144.1	142.7	143.7	48.4
S53	14+18.56	W36x182	4	94.0	129.7	129.7	137.5	143.8	142.4	143.4	48.2
S54	14+26.56	W36x182	4	94.0	129.7	129.7	137.2	143.6	142.2	143.2	48.0
S55	14+34.56	W36x182	4	94.0	129.7	129.7	136.8	143.3	142.0	143.0	47.7
S56	14+42.56	W36x182	4	94.0	129.7	129.7	136.4	143.1	141.7	142.7	47.5
S57	14+50.56	W36x182	4	94.0	129.7	129.7	136.1	142.9	141.5	142.5	47.2
S58	14+58.56	W18x86	3	112.7	129.7	134.0	136.0	142.6	141.3	142.3	28.3
S59	14+66.56	W18x86	3	112.7	134.0	134.0	136.8	142.4	141.1	142.1	28.1
S60	14+74.56	W18x86	3	112.7	134.0	134.0	138.9	142.1	141.0	142.0	28.0

RODNEY D. RICHARDSON STATE OF WASHINGTON 33999 REGISTERED PROFESSIONAL ENGINEER

NO.	DATE	BY	APPR.	REVISIONS

Approved By

TRANSPORTATION DESIGN MANAGER — DATE
M. ARAKELYAN
PROJECT MANAGER — DATE

J. VO — DESIGNED BY — DATE
J. FRYE — DRAWN BY — DATE
J. LEM — CHECKED BY — DATE

City of Bellevue
TRANSPORTATION DEPARTMENT

HDR

124th Ave NE - NE Spring Blvd to NE Ichigo Way

RETAINING WALL 4
TYPICAL SECTIONS

SHEET NAME WP7

SECTION 28, T. 25 N., R5E., W.M.
KING COUNTY

95% SUBMITTAL NOT FOR CONSTRUCTION

GENERAL NOTES:

1. SEE SHEET WPN1 FOR STRUCTURE NOTES.
2. BLOCK LAYOUT SHOWN IS CONCEPTUAL ONLY. GRAVITY BLOCK WALL RECTANGULAR PRISMS SHALL BE 2'–5½' BY 2'–5½" BY 4'–11" ± ½" TYPICAL EXCEPT FOR SPECIAL BLOCKS SUCH AS CORNER ELEMENTS.
3. CONCRETE FOR GRAVITY BLOCK WALLS SHALL BE CONCRETE CL 3000 MN.
4. CONTRACTOR SHALL SUBMIT WORKING DRAWINGS TO THE ENGINEER IN ACCORDANCE WITH SECTION 8–24 OF THE SPECIAL PROVISIONS.

WALL 5 – APPROXIMATE QUANTITIES	
GRAVITY BLOCK WALL (S.F.)	450

WALL 6 – APPROXIMATE QUANTITIES	
GRAVITY BLOCK WALL (S.F.)	125

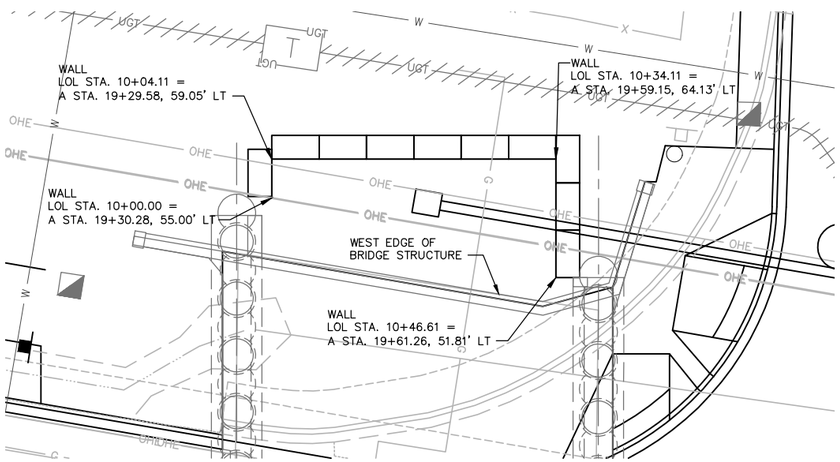

WALL 5 PLAN – GRAVITY BLOCK WALL
SCALE: 1½" = 1'–0"

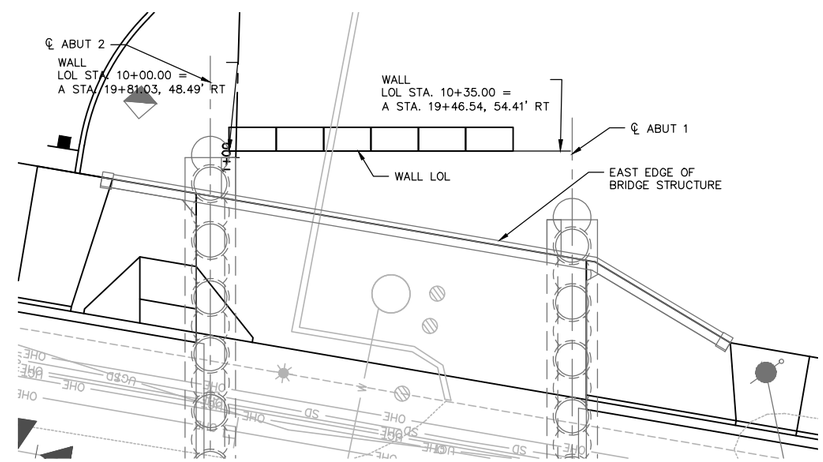

WALL 6 PLAN – GRAVITY BLOCK WALL
SCALE: 1½" = 1'–0"

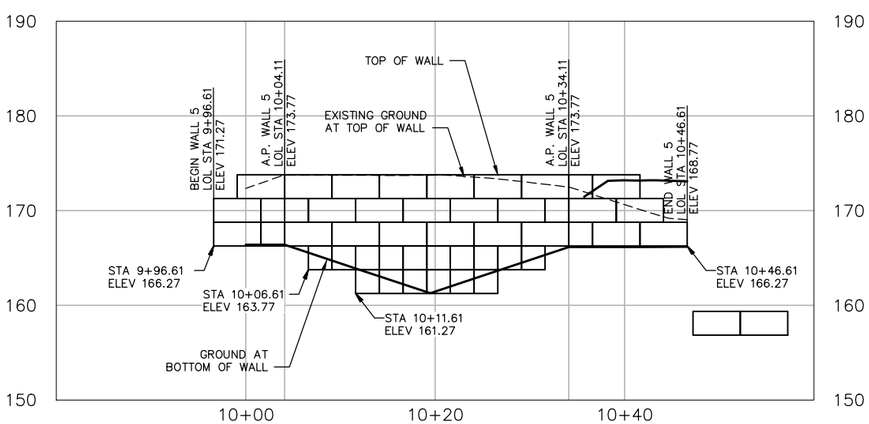

WALL 5 DEVELOPED ELEVATION – GRAVITY BLOCK WALL
SCALE: 1½" = 1'–0"

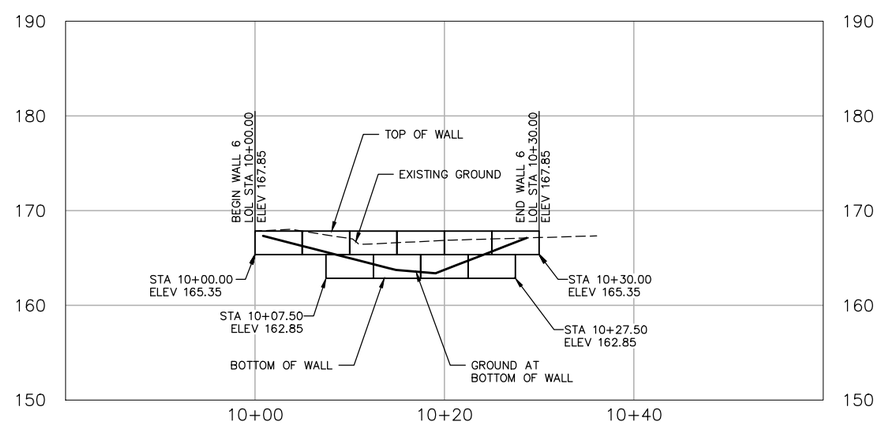

WALL 6 DEVELOPED ELEVATION – GRAVITY BLOCK WALL
SCALE: 1½" = 1'–0"

NO.	DATE	BY	APPR.	REVISIONS

Approved By

TRANSPORTATION DESIGN MANAGER — DATE
M. ARAKELYAN
PROJECT MANAGER — DATE

J. VO — DESIGNED BY — DATE
J. FRYE — DRAWN BY — DATE
J. LEM — CHECKED BY — DATE

City of Bellevue
TRANSPORTATION DEPARTMENT

124th Ave NE - NE Spring Blvd to NE Ichigo Way

RETAINING WALL 5 & 6
PLAN & ELEVATION

SHEET NAME WP7A

SHT 129A OF 198

95% SUBMITTAL NOT FOR CONSTRUCTION

GENERAL NOTES:

1. SEE WPN1 FOR STRUCTURE NOTES.
2. SEE SECTION A ON SHEET WP7 FOR ADDTIONAL INFORMATION NOT SHOWN.
3. WEEP HOLES SHALL BE LOCATED 12'-0' MAXIMUM ON CENTERS. PLACE 6" ABOVE FINAL GROUND AT FRONT FACE OF WALL.
4. PREFABRICATED DRAINAGE MAT SHALL BE 4'-0" WIDE BY FULL LAGGED HEIGHT CENTERED BETWEEN PILES. TAPE EDGES TO PREVENT CONCRETE INFILTRATION.

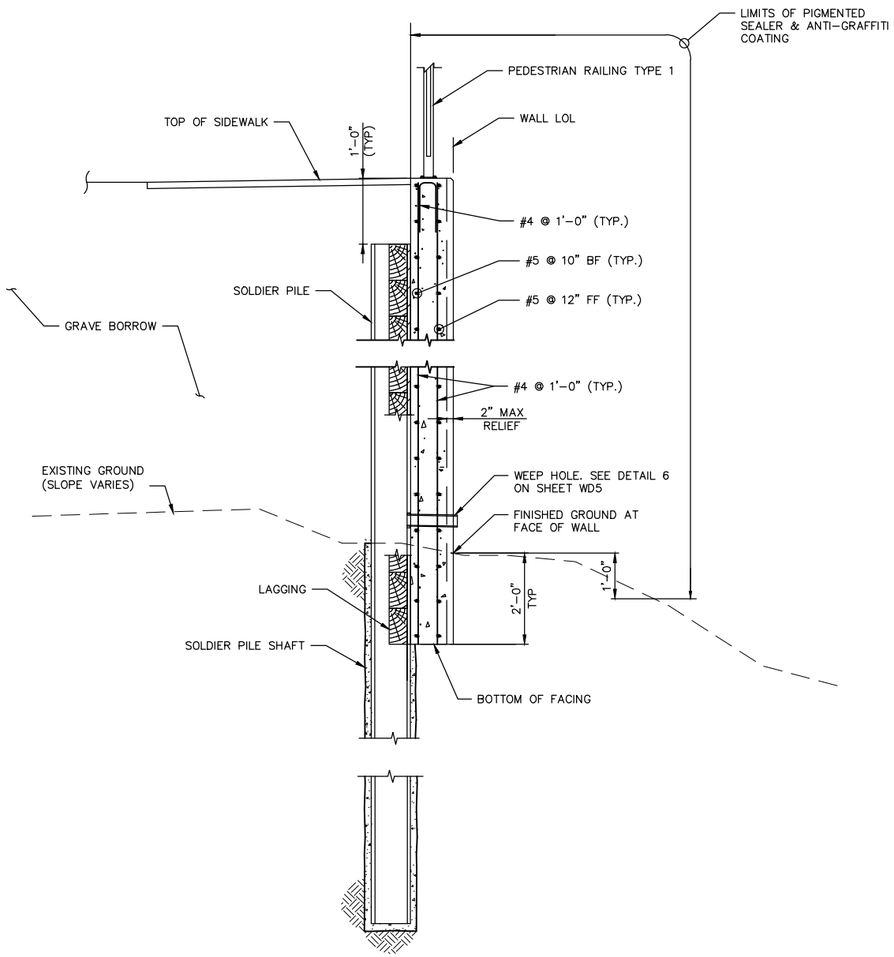

TYPICAL SECTION (B / WP5, WP6)
N.T.S.

LOL STA 10+00.00 TO 11+55.34
LOL STA 14+38.56 TO 14+78.56

** LANDCSAPE AND URBAN DESIGN ELEMENTS SHOWN FOR REFERENCE ONLY. NOT ALL ELEMENTS SHOWN FOR CLARRITY. SEE LS AND LSD SHEETS FOR PLAN AND DETAILS.

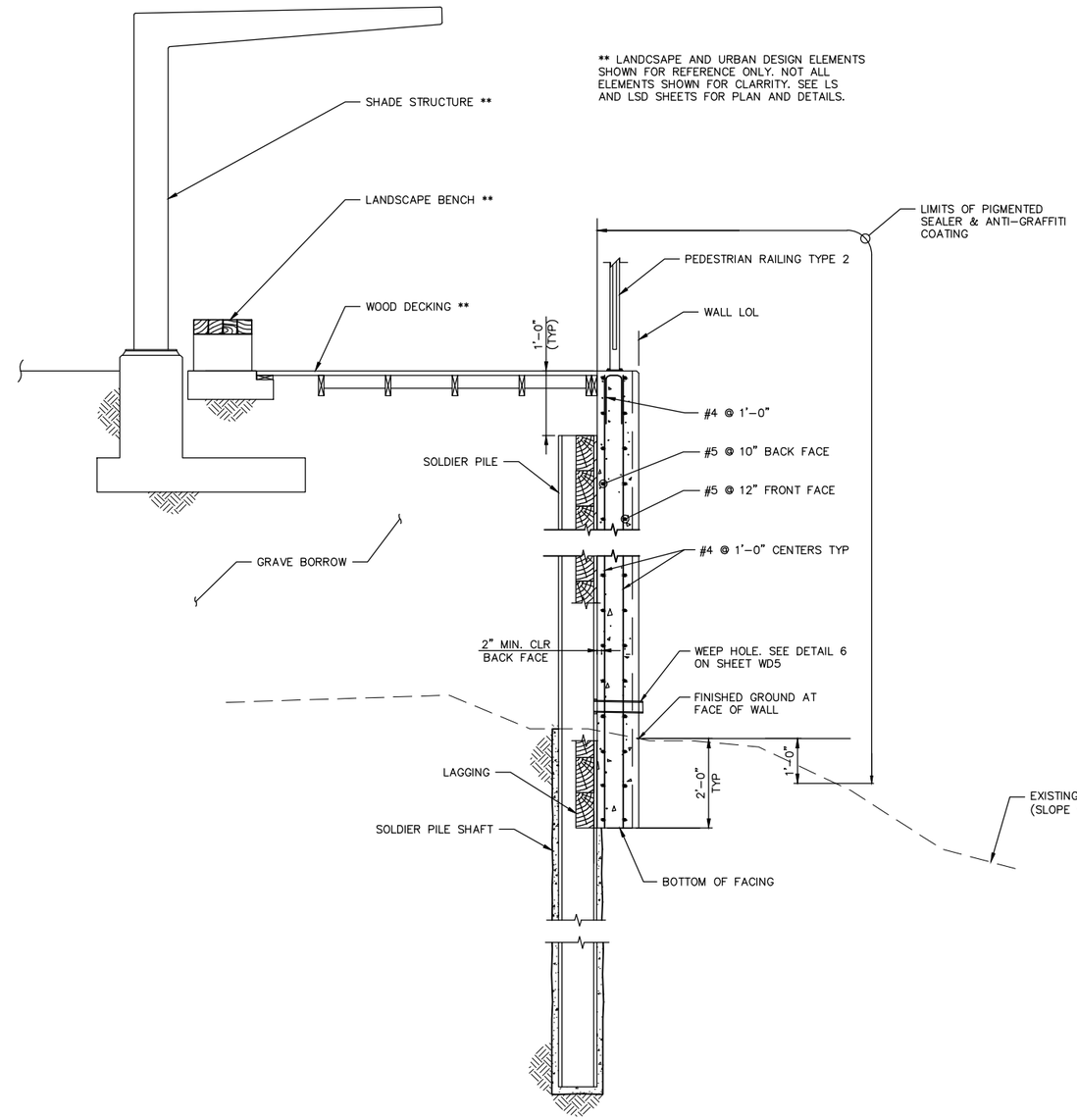

OVERLOOK SECTION (C / WP5)
N.T.S.

LOL STA 11+55.34 TO 12+42.33

NO.	DATE	BY	APPR.	REVISIONS

Approved By

TRANSPORTATION DESIGN MANAGER — DATE
M. ARAKELYAN
PROJECT MANAGER — DATE

J. VO — DESIGNED BY — DATE
J. FRYE — DRAWN BY — DATE
J. LEM — CHECKED BY — DATE

City of Bellevue
TRANSPORTATION DEPARTMENT

HDR

124th Ave NE - NE Spring Blvd to NE Ichigo Way

SOLDIER PILE WALL 4 SECTIONS

SHEET NAME WD1

SHT 130 OF 198

95% SUBMITTAL NOT FOR CONSTRUCTION

GENERAL NOTES:

1. SEE WPN1 FOR STRUCTURE NOTES.
2. SEE SECTION A ON SHEET WP7 FOR ADDTIONAL INFORMATION NOT SHOWN.
3. WEEP HOLES SHALL BE LOCATED 12'-0' MAXIMUM ON CENTERS. PLACE 6" ABOVE FINAL GROUND AT FRONT FACE OF WALL.
4. PREFABRICATED DRAINAGE MAT SHALL BE 4'-0" WIDE BY FULL LAGGED HEIGHT CENTERED BETWEEN PILES. TAPE EDGES TO PREVENT CONCRETE INFILTRATION.

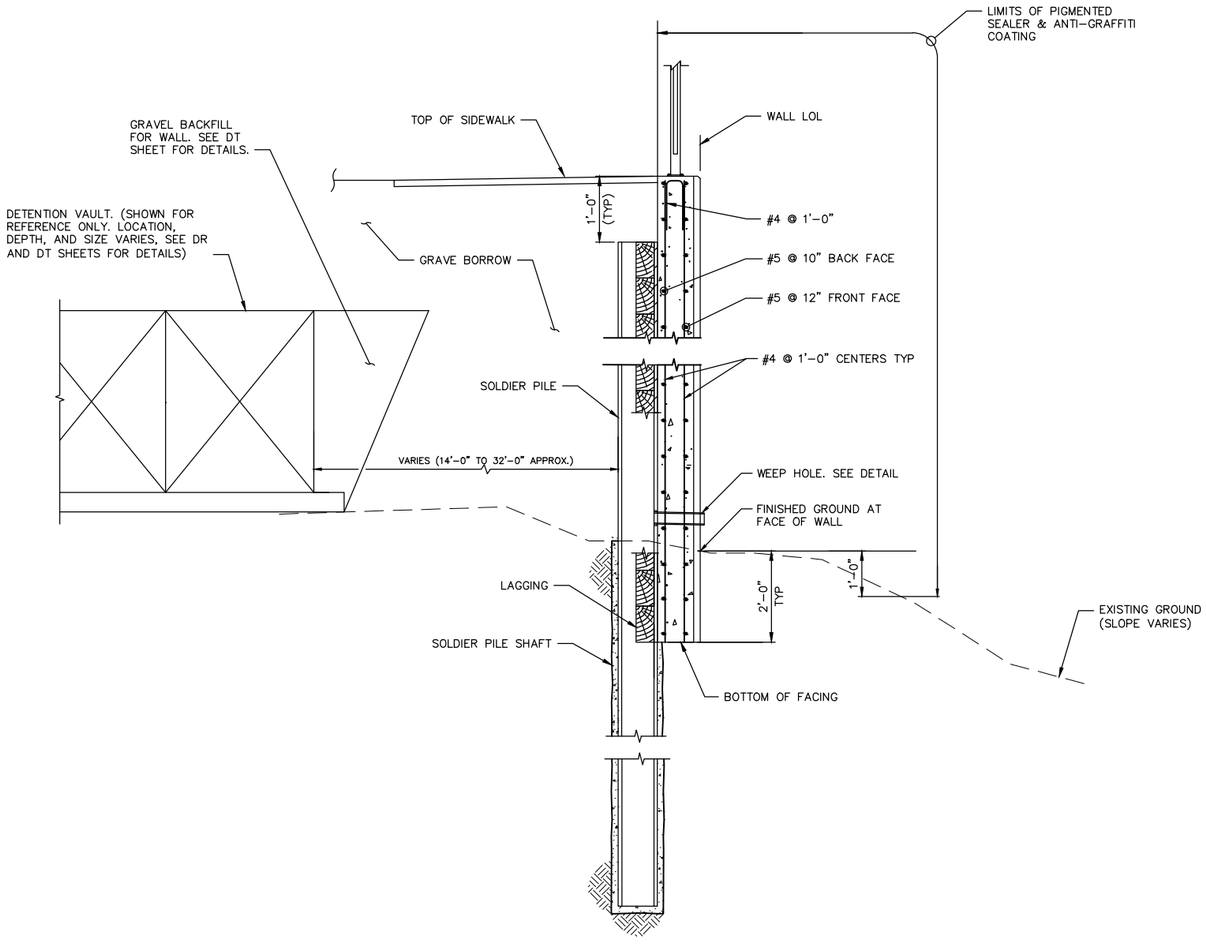

SECTION AJACENT DETENTION VAULT

D

WP5, WP6

N.T.S.

LOL STA 12+00.00 TO 13+60.00 (APPROXIMATE)

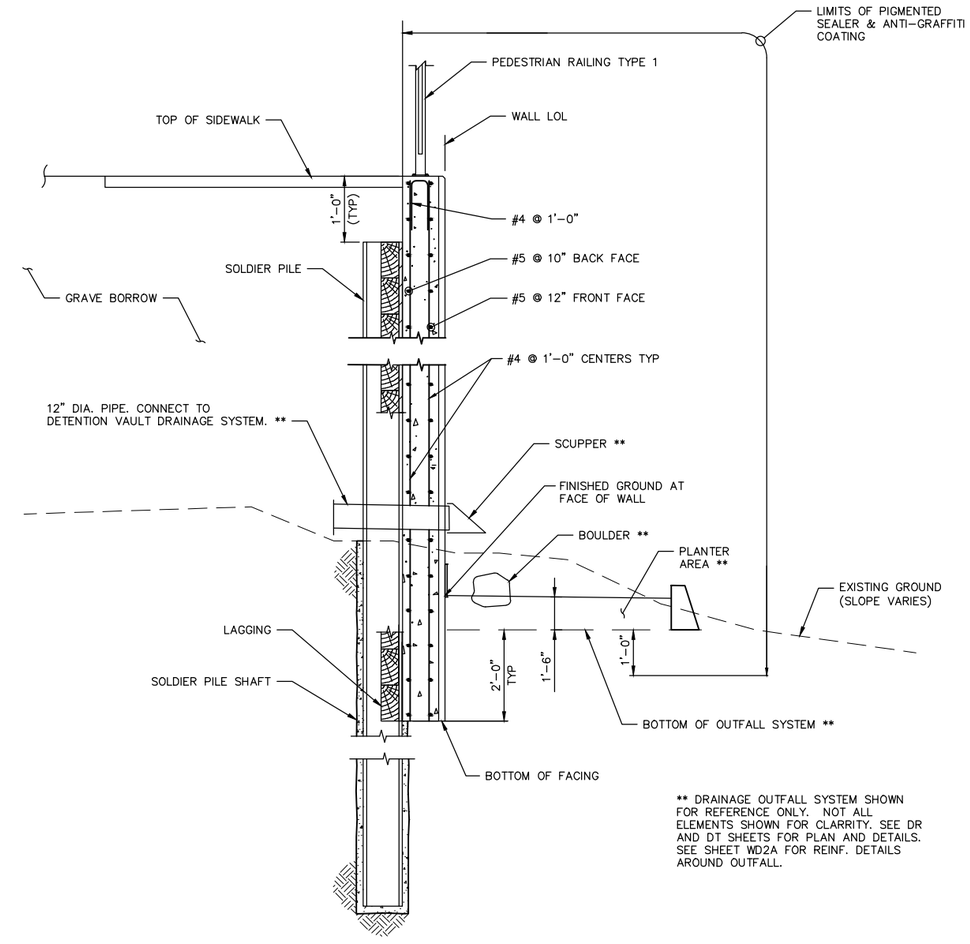

** DRAINAGE OUTFALL SYSTEM SHOWN FOR REFERENCE ONLY. NOT ALL ELEMENTS SHOWN FOR CLARRITY. SEE DR AND DT SHEETS FOR PLAN AND DETAILS. SEE SHEET WD2A FOR REINF. DETAILS AROUND OUTFALL.

SECTION DETENTION VAULT OUTFALL

E

WP6

N.T.S.

LOL STA 13+90.56 TO 14+38.56

NO.	DATE	BY	APPR.	REVISIONS

Approved By

TRANSPORTATION DESIGN MANAGER — DATE
M. ARAKELYAN
PROJECT MANAGER — DATE

J. VO — DESIGNED BY — DATE
J. FRYE — DRAWN BY — DATE
J. LEM — CHECKED BY — DATE

City of Bellevue
TRANSPORTATION DEPARTMENT

HDR

124th Ave NE - NE Spring Blvd to NE Ichigo Way

SOLDIER PILE WALL 4 SECTIONS CONTINUED

SHEET NAME **WD1A**

SHT 130A OF 198

95% SUBMITTAL NOT FOR CONSTRUCTION

GENERAL NOTES:

1. SEE WPN1 FOR STRUCTURE NOTES.
2. WEEP HOLES SHALL BE LOCATED 12'-0" MAXIMUM ON CENTERS. PLACE 6" ABOVE FINAL GROUND AT FRONT FACE OF WALL.
3. PREFABRICATED DRAINAGE MAT SHALL BE 4'-0" WIDE BY FULL LAGGED HEIGHT CENTERED BETWEEN PILES. TAPE EDGES TO PREVENT CONCRETE INFILTRATION.

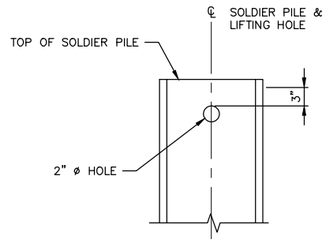

SOLDIER PILE LIFTING HOLE (1 / –)
N.T.S.
LIFTING HOLE TO BE DRILLED IN THE SHOP PRIOR TO PAINTING

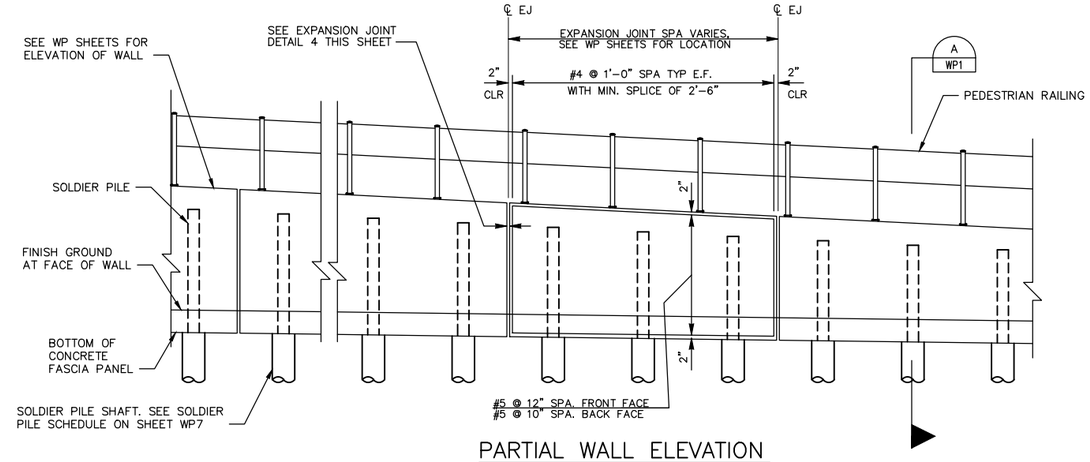

PARTIAL WALL ELEVATION
N.T.S.

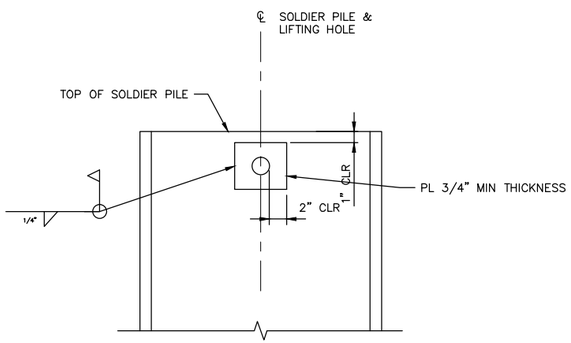

LIFTING HOLE REPAIR DETAIL (2 / –)
N.T.S.

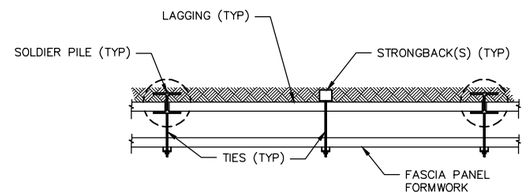

TYPICAL FASCIA PANEL FORMWORK (3 / –)
N.T.S.
SEE SPECIFICATIONS FOR FASCIA PANEL FORMING.
STRONGBACK(S) AND TIES SPACED AS REQUIRED FOR FORMING.

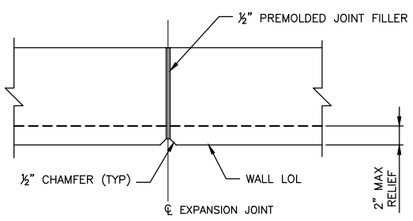

EXPANSION JOINT DETAIL (4 / –)
N.T.S.
EXPANSION JOINTS SHALL BE LOCATED AS SHOWN ON WALL ELEVATION

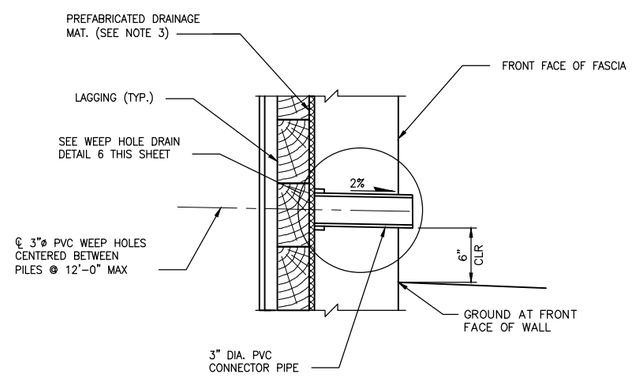

SOLDIER PILE WEEP HOLE DETAIL (5 / –)
N.T.S.

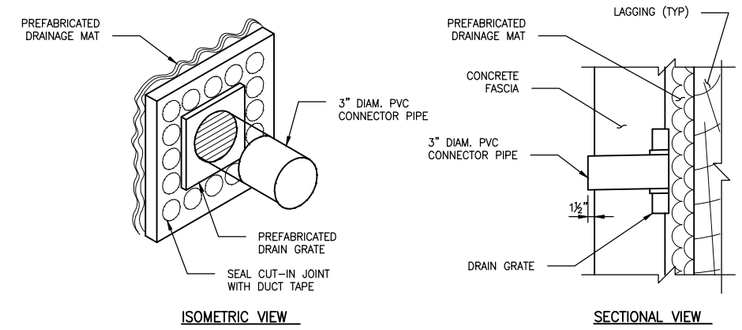

WEEP HOLE DRAIN DETAIL (6 / –)
N.T.S.
DRAINAGE GRATE INSTALLATION SHALL NOT DISRUPT PREFABRICATED DRAINAGE MAT

NO.	DATE	BY	APPR.	REVISIONS

Approved By

TRANSPORTATION DESIGN MANAGER — DATE
M. ARAKELYAN
PROJECT MANAGER — DATE

J. VO — DESIGNED BY — DATE
J. FRYE — DRAWN BY — DATE
J. LEM — CHECKED BY — DATE

City of Bellevue
TRANSPORTATION DEPARTMENT

HDR

124th Ave NE - NE Spring Blvd to NE Ichigo Way

SOLDIER PILE WALL 4 DETAILS 1

SHEET NAME WD2

SHT 131 OF 198

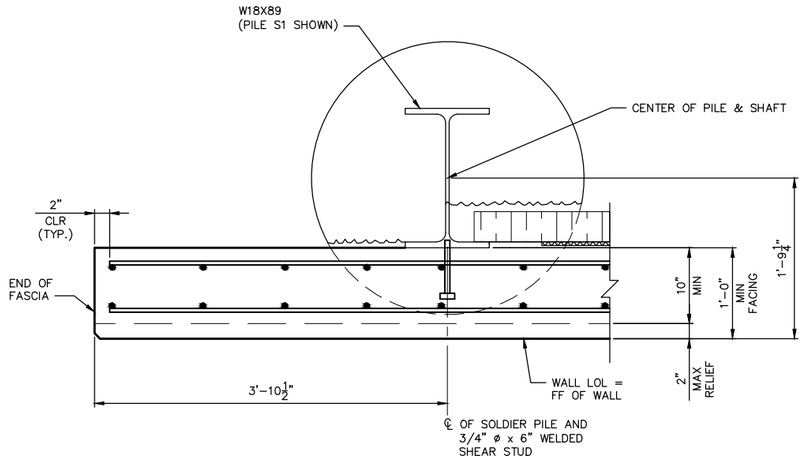

END 1 DETAIL

1 WP4

N.T.S.

(PILE S1 SHOWN)

(SEE DETAIL 2, THIS SHEET, FOR ADDITIONAL TYPICAL CALLOUTS NOT SHOWN.)

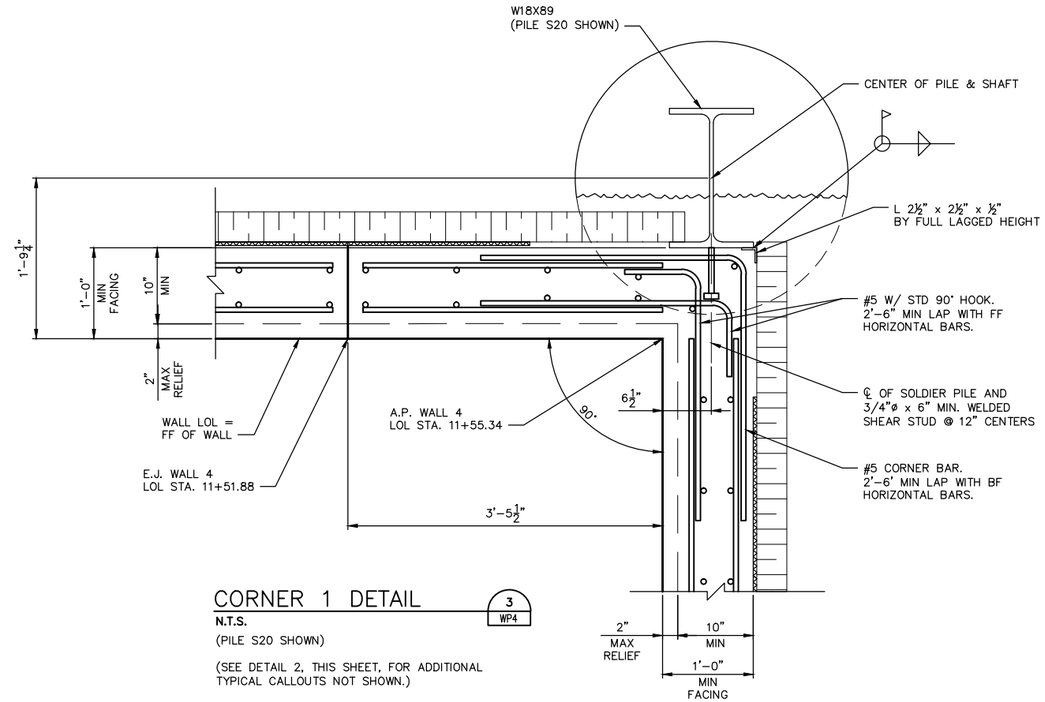

CORNER 1 DETAIL

3 WP4

N.T.S.

(PILE S20 SHOWN)

(SEE DETAIL 2, THIS SHEET, FOR ADDITIONAL TYPICAL CALLOUTS NOT SHOWN.)

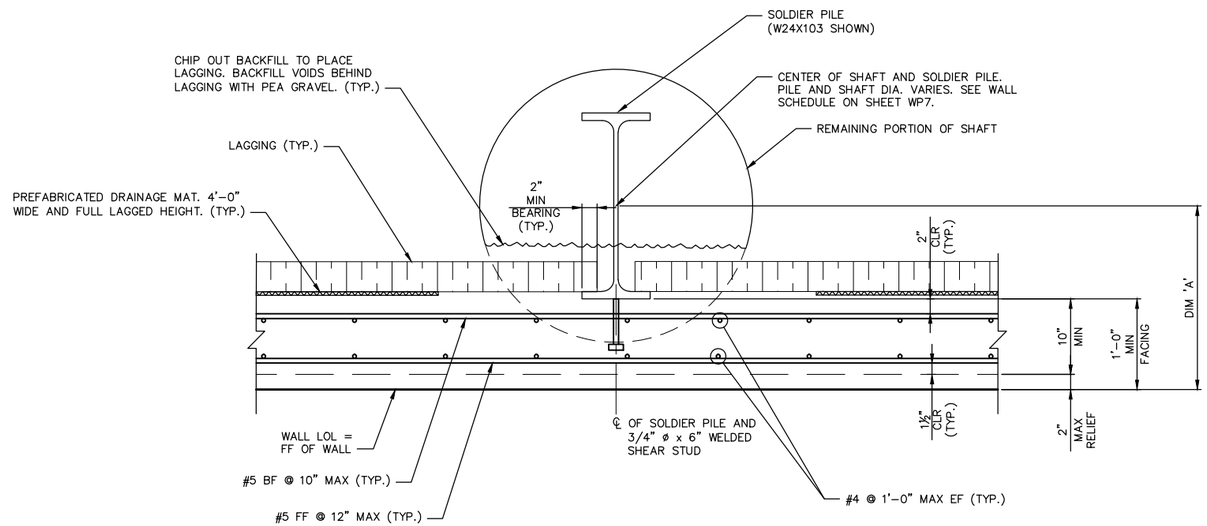

TYPICAL INTERIOR PILE DETAIL

2 WP4

N.T.S.

(W24X103 PILE SHOWN. OTHER SECTIONS SIMILAR)

PILE & SHAFT OFFSET FROM LAYOUT LINE.	
SOLIDER PILE SECTION	DIMENSION 'A'
W18X86	1'-9 ¼"
W24X103	2'-0 ¼"
W36X150	2'-5 ⅞"
W36X182	2'-6 ⅛"

NO.	DATE	BY	APPR.	REVISIONS

Approved By

TRANSPORTATION DESIGN MANAGER — DATE
M. ARAKELYAN
PROJECT MANAGER — DATE

J. VO — DESIGNED BY — DATE
J. FRYE — DRAWN BY — DATE
J. LEM — CHECKED BY — DATE

City of Bellevue
TRANSPORTATION DEPARTMENT

124th Ave NE - NE Spring Blvd to NE Ichigo Way

SOLDIER PILE WALL 4
DETAILS 2

SHEET NAME WD3

SHT 132 OF 198

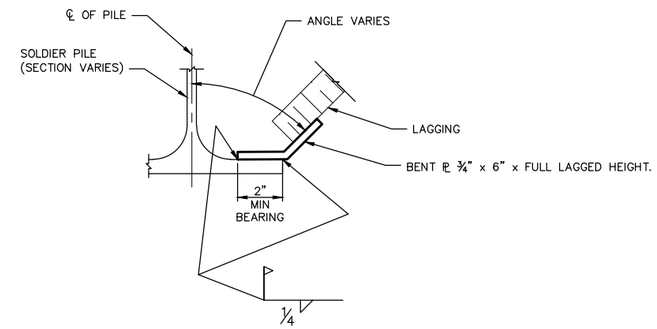

BENT PLATE DETAIL 6 –

N.T.S.

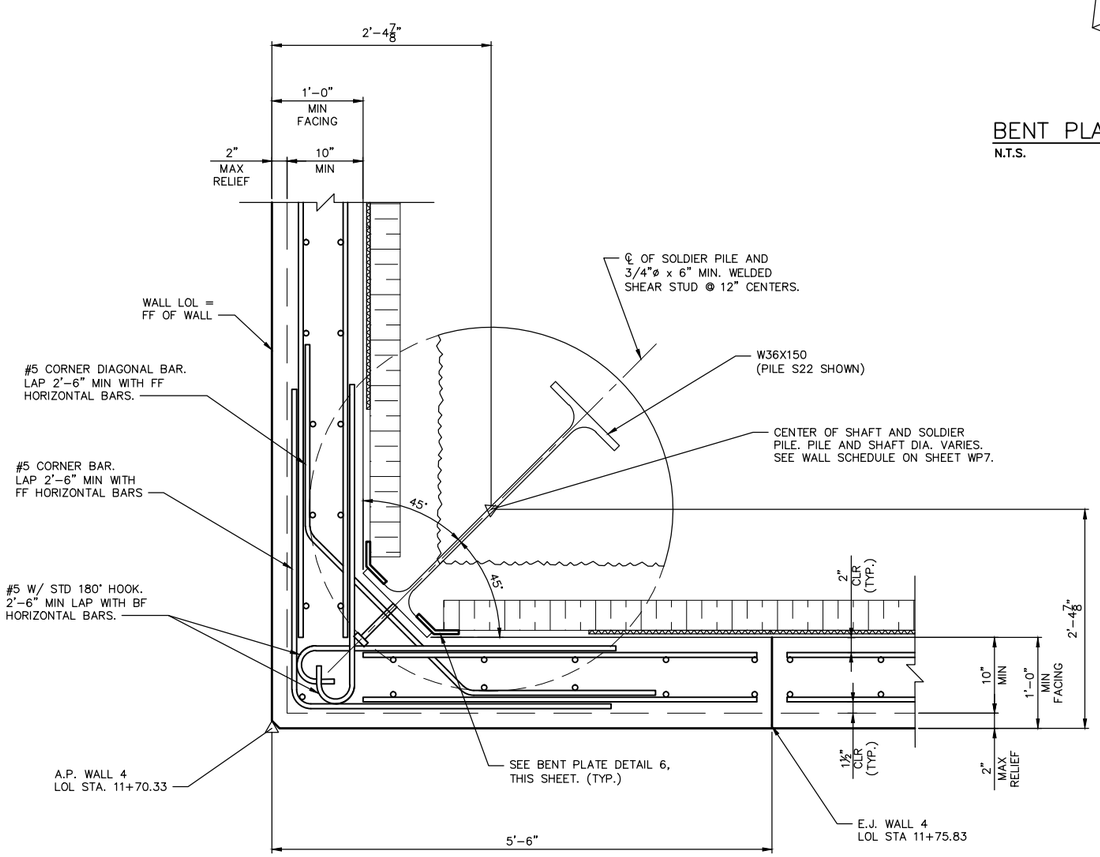

CORNER 2 DETAIL 4 WP4

N.T.S.

(PILE S22 SHOWN)

(SEE DETAIL 2, SHEET WD3, FOR ADDITIONAL TYPICAL CALLOUTS NOT SHOWN.)

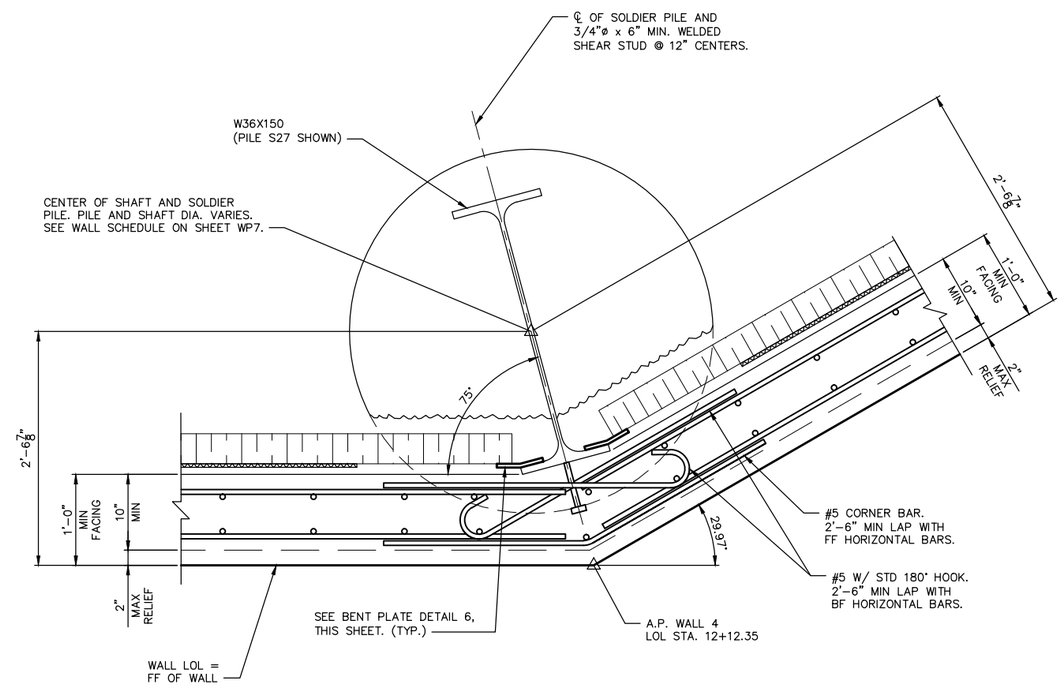

CORNER 3 DETAIL 5 WP4

N.T.S.

(PILE S27 SHOWN)

(SEE DETAIL 2, SHEET WD3, FOR ADDITIONAL TYPICAL CALLOUTS NOT SHOWN.)

NO.	DATE	BY	APPR.	REVISIONS

Approved By

TRANSPORTATION DESIGN MANAGER — DATE
M. ARAKELYAN
PROJECT MANAGER — DATE

J. VO — DESIGNED BY — DATE
J. FRYE — DRAWN BY — DATE
J. LEM — CHECKED BY — DATE

City of Bellevue
TRANSPORTATION DEPARTMENT

HDR

124th Ave NE - NE Spring Blvd to NE Ichigo Way

SOLDIER PILE WALL 4
DETAILS 3

SHEET NAME WD4

SHT 133 OF 198

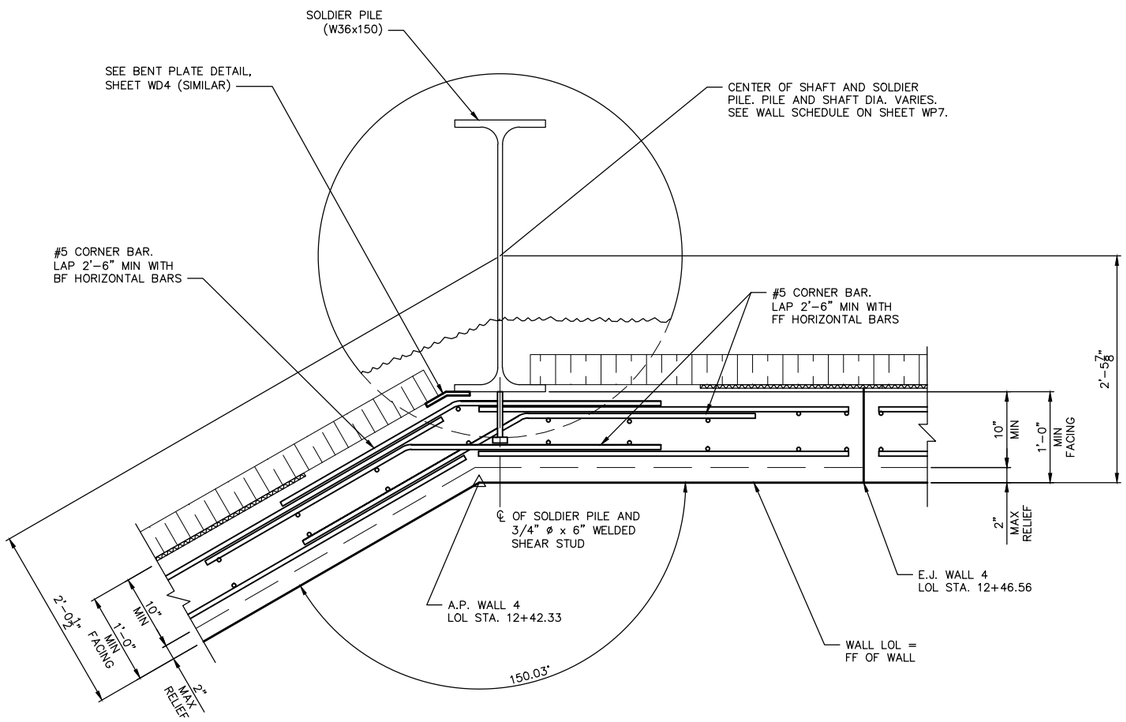

CORNER 4 DETAIL

7 / WP4

N.T.S.

(PILE S31 SHOWN)

(SEE DETAIL 2, SHEET WD3, FOR ADDITIONAL TYPICAL CALLOUTS NOT SHOWN.)

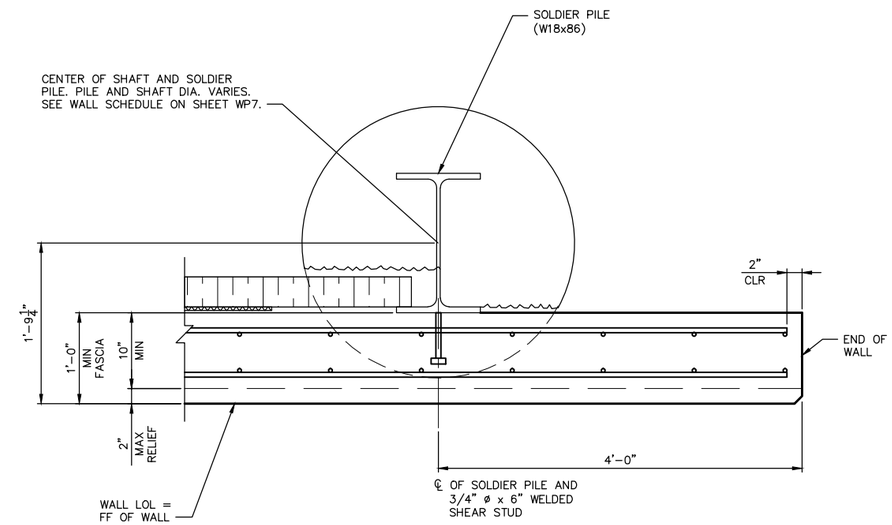

END 2 DETAIL

8 / WP4

N.T.S.

(PILE S60 SHOWN)

(SEE DETAIL 2, SHEET WD3, FOR ADDITIONAL TYPICAL CALLOUTS NOT SHOWN.)

NO.	DATE	BY	APPR.	REVISIONS

Approved By

TRANSPORTATION DESIGN MANAGER — DATE
M. ARAKELYAN
PROJECT MANAGER — DATE

J. VO — DESIGNED BY — DATE
J. FRYE — DRAWN BY — DATE
J. LEM — CHECKED BY — DATE

City of Bellevue
TRANSPORTATION DEPARTMENT

HDR

124th Ave NE - NE Spring Blvd to NE Ichigo Way

SOLDIER PILE WALL 4
DETAILS 4

SHEET NAME WD5

SHT 134 OF 198

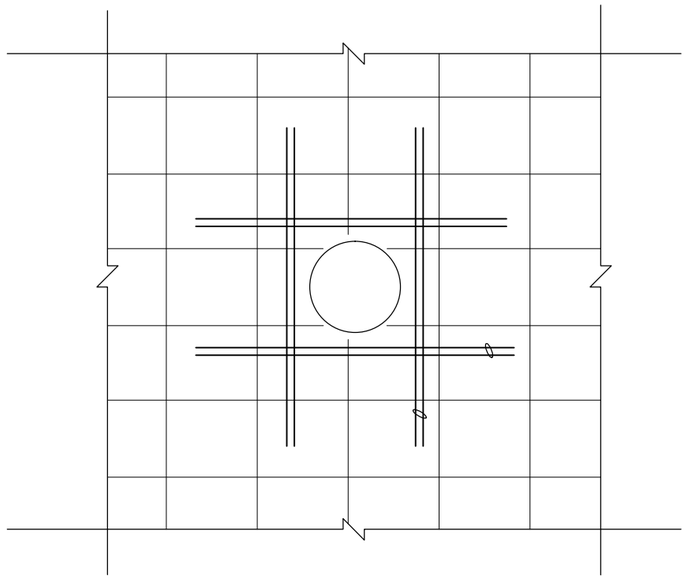

FACING REINF. AROUND DRAINAGE OUTFALL (9 / –)

N.T.S.

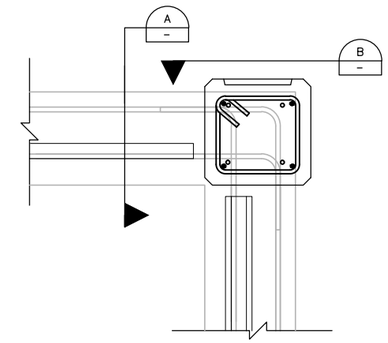

CONCRETE PILASTER CORNER 1 DETAIL (10 / –)

N.T.S.

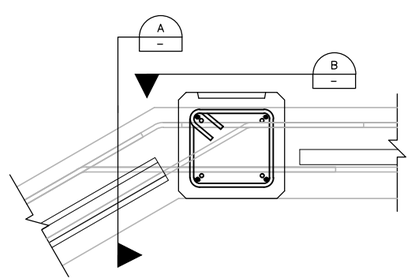

CONCRETE PILASTER CORNER 2 DETAIL (11 / –)

N.T.S.

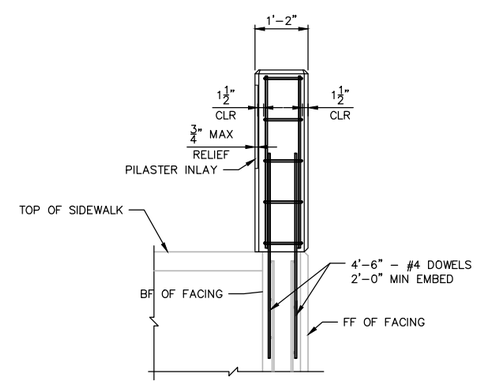

CONCRETE PILASTER SIDE VIEW (A / –)

N.T.S.

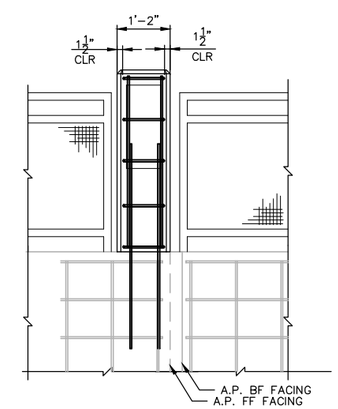

CONCRETE PILASTER FRONT VIEW (B / –)

N.T.S.

NO.	DATE	BY	APPR.	REVISIONS

Approved By

TRANSPORTATION DESIGN MANAGER — DATE
M. ARAKELYAN
PROJECT MANAGER — DATE

J. VO — DESIGNED BY — DATE
J. FRYE — DRAWN BY — DATE
J. LEM — CHECKED BY — DATE

City of Bellevue
TRANSPORTATION DEPARTMENT

HDR

124th Ave NE - NE Spring Blvd to NE Ichigo Way

SOLDIER PILE WALL 4 DETAILS 5

SHEET NAME **WD5A**

SHT 134A OF 198

95% SUBMITTAL NOT FOR CONSTRUCTION

GENERAL NOTES:

1. SEE STRUCTURE NOTES ON SHEET WPN1.
2. GEOGRID REINFORCEMENT SHALL BE SELECTED OFF OF THE WSDOT QUALIFIED PRODUCTS LIST (QPL) AND AS RECOMMENDED BY THE WALL MANUFACTURER.
3. INSTALL UNREINFORCED LEVELING PAD PER WSDOT STANDARD SPECIFICATIONS AND BLOCK WALL MANUFACTURER'S RECOMMENDATIONS.
4. INSTALL PEDESTRIAN RAILING AND BEAM GUARD RAIL PER MANUFACTURER'S RECOMMENDATIONS.
5. ALL REINFORCING SHALL BE EPOXY COATED UNLESS NOTED OTHERWISE AND PAID FOR AS PART OF THE WALL.
6. WALL BATTER VARIES WITH BLOCK TYPE. WALL BATTER SHALL BE WALL MANUFACTURER'S NEAR VERTICAL WALL SYSTEM. WALL BATTER SHALL NOT EXCEED 6 DEGREES.

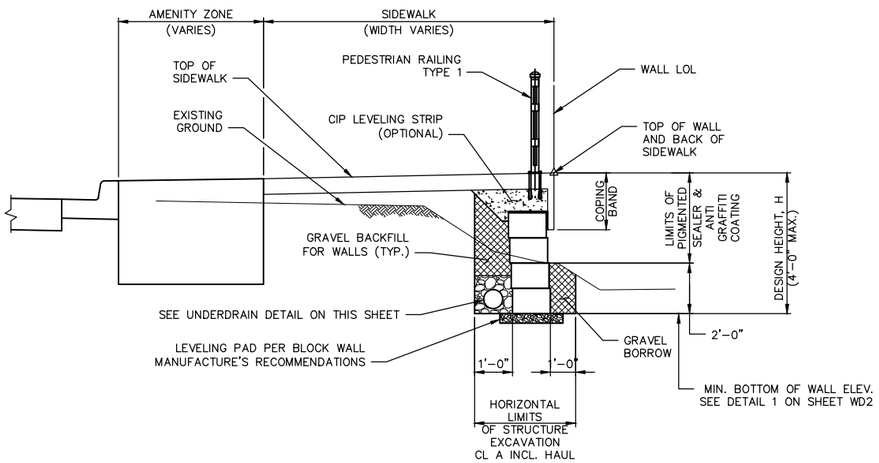

STRUCTURAL EARTH WALL W/OUT REINF. H < 4 FT (A)

N.T.S.

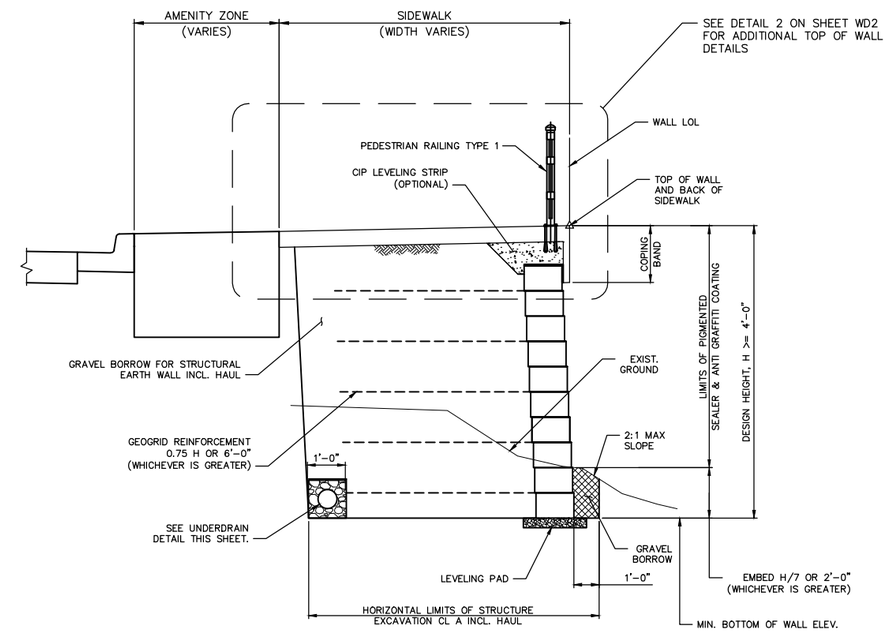

STRUCTURAL EARTH WALL H >= 4 FT (B)

N.T.S.

WP1, WP3

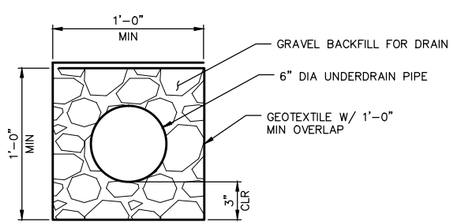

UNDERDRAIN DETAIL (3)

N.T.S.

NO.	DATE	BY	APPR.	REVISIONS

Approved By

TRANSPORTATION DESIGN MANAGER — DATE
M. ARAKELYAN
PROJECT MANAGER — DATE

J. VO — DESIGNED BY — DATE
J. FRYE — DRAWN BY — DATE
J. LEM — CHECKED BY — DATE

City of Bellevue
TRANSPORTATION DEPARTMENT

HDR

124th Ave NE - NE Spring Blvd to NE Ichigo Way

STRUCTURAL EARTH WALL TYPICAL SECTIONS & DETAILS

SHEET NAME WD6

SHT 135 OF 198

95% SUBMITTAL NOT FOR CONSTRUCTION

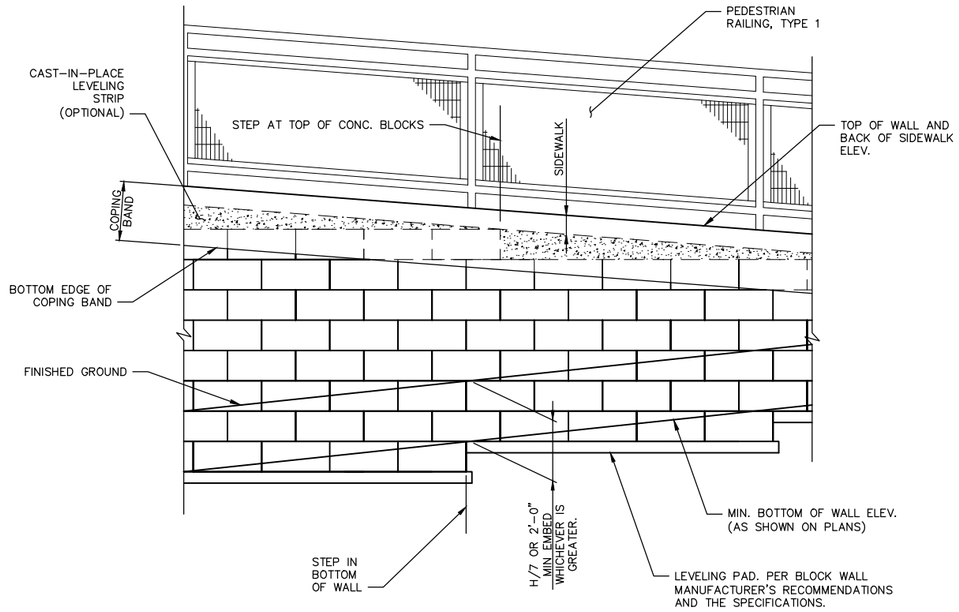

CONCRETE BLOCK FACED SE WALL
PARTIAL ELEVATION
N.T.S.

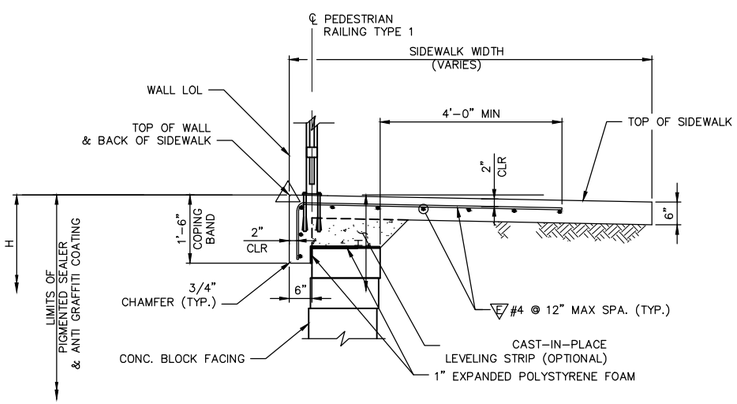

TOP OF SE WALL DETAIL
SIDEWALK AND PEDESTRIAN RAILING TYPE 1 (2 / –)
N.T.S.

GENERAL NOTES:

1. SEE STRUCTURE NOTES ON SHEET WPN1
5. GEOSYNTHETIC REINFORCEMENT TYPE AND PLACEMENT SHALL BE DESIGNED BY CONTRACTOR AND AS RECOMMENDED BY BLOCK WALL MANUFACTURER.
6. INSTALL LEVELING PAD PER BLOCK WALL MANUFACTURER'S RECOMMENDATIONS.
7. INSTALL PEDESTRIAN RAILING PER MANUFACTURER'S RECOMMENDATIONS.
8. ALL REINFORCING SHALL BE EPOXY COATED UNLESS NOTED OTHERWISE AND PAID FOR AS PART OF THE WALL.
9. PENETRATIONS THRU WALL 12-INCH DIA. OR LESS MAY HAVE BLOCKS CUT TO FIT IN ACCORDANCE WITH THE BLOCK WALL MANUFACTURERE'S RECOMMENDATIONS.
10. PENETRATIONS 12-INCHES OR GREATER SHALL HAVE THE WALL CHECKED FOR STABILITY. PROVIDE ADDITIONAL EXTERNAL STABILITY WITH REINF. CONCRETE HEADWALLS, BOND BEAMS OR OTHER WALL MANUFACTURER RECOMMENDED METHOD. SEE DETAIL 3 THIS SHEET.
11. WORK AND COSTS ASSOCIATED WITH CONSTRUCTING AND PLACING THE CAST-IN-PLACE LEVELING STRIP, COPING BAND, WALL UNDERDRAIN AND WALL PENETRATIONS SHALL BE INCLUDED IN THE SQUARE FOOT COST OF THE WALL.

NO.	DATE	BY	APPR.	REVISIONS

Approved By
TRANSPORTATION DESIGN MANAGER — DATE
M. ARAKELYAN
PROJECT MANAGER — DATE

J. VO — DESIGNED BY — DATE
J. FRYE — DRAWN BY — DATE
J. LEM — CHECKED BY — DATE

City of Bellevue
TRANSPORTATION DEPARTMENT

124th Ave NE - NE Spring Blvd to NE Ichigo Way

STRUCTURAL EARTH WALL DETAILS
SHEET NAME WD7
SHT 136 OF 198

95% SUBMITTAL NOT FOR CONSTRUCTION

GENERAL NOTES:

1. SEE SHEET WPN1 FOR RETAINING WALL STRUCTURE NOTES.
2. ALL CONCRETE SHALL BE CONC. CL 4000.
3. CONCRETE IN THE WALL SECTIONS SHALL BE PLACED SEPARATELY BETWEEN EXPANSION JOINTS WITH A MINIMUM OF 24 HOUR PERIOD BEFORE PLACING CONCRETE IN THE ADJACENT SECTION.

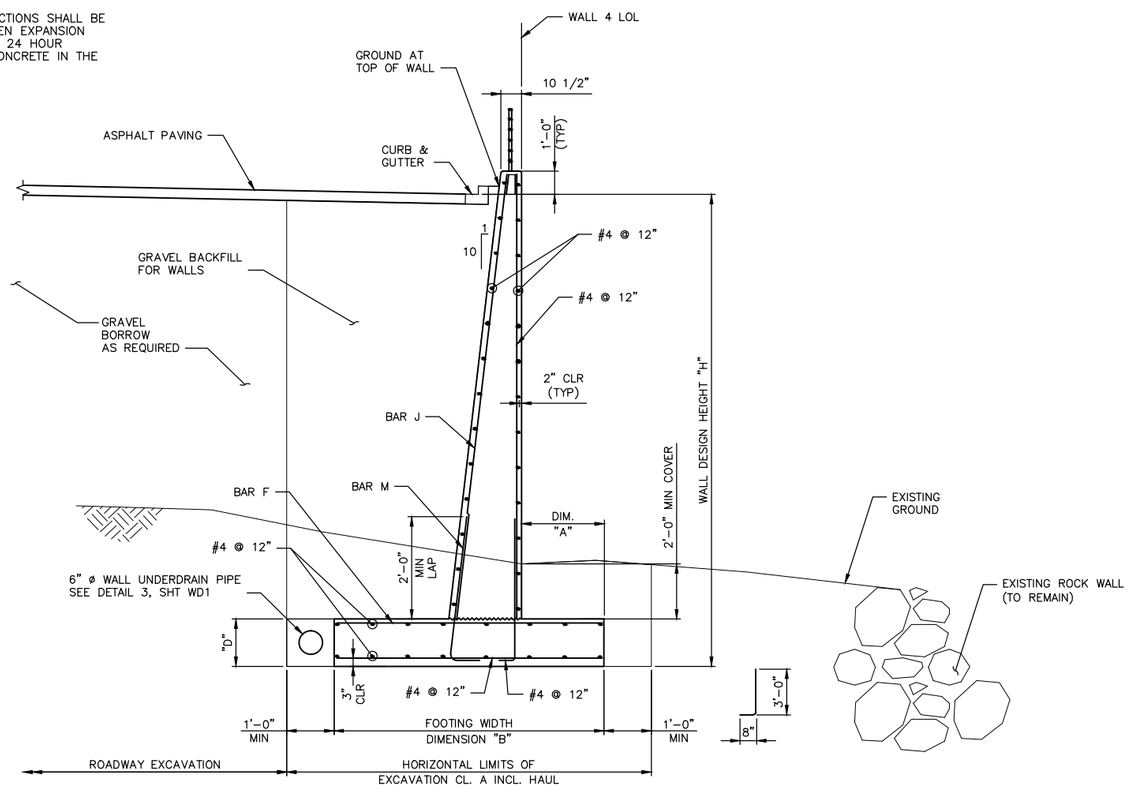

WALL 4 – TYPICAL SECTION (A / WP2)
N.T.S.

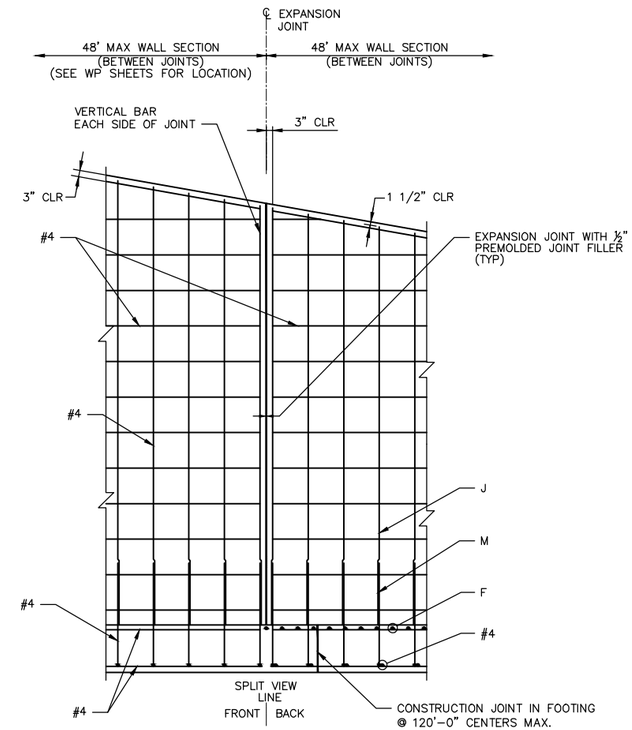

PARTIAL ELEVATION VIEW (C / –)
N.T.S.
WALL 4

CAST-IN-PLACE WALL 2 SCHEDULE									
WALL DESIGN HEIGHT "H"	DIMENSION "A"	DIMENSION "B"	DIMENSION "D"	BAR "J"		BAR "M"		BAR "F"	
				SIZE	SPACING (IN)	SIZE	SPACING (IN)	SIZE	SPACING (IN)
6'-0"	1'-0'	3'-9"	1'-0"	#4	12	#4	12	#4	12
8'-0"	1'-0"	4'-9"	1'-0"	#4	12	#4	12	#4	12
10'-0"	1'-0"	5'-9"	1'-0"	#4	12	#4	12	#4	6
13'-0"	1'-3"	6'-6"	1'-0"	#4	6	#4	6	#4	6

FOR WALL SECTIONS TALLER THAN DESIGN HEIGHT, USE NEXT WALL HEIGHT.

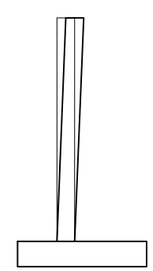

STEM OFFSET VALUES
N.T.S.

BAR M DIMENSIONS			
BAR	DIMESION 'b'	DIMENSION 'h'	RADIUS "R"
#4	8"	3'-6"	1 ½"

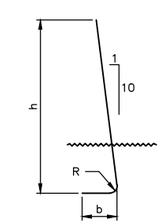

BAR M

NO.	DATE	BY	APPR.	REVISIONS

Approved By

TRANSPORTATION DESIGN MANAGER — DATE
M. ARAKELYAN
PROJECT MANAGER — DATE

J. VO — DESIGNED BY — DATE
J. FRYE — DRAWN BY — DATE
J. LEM — CHECKED BY — DATE

City of Bellevue
TRANSPORTATION DEPARTMENT

124th Ave NE - NE Spring Blvd to NE Ichigo Way

RETAINING WALL 2
SECTION, ELEVATION & TABLE

SHEET NAME WD8

SHT 137 OF 198

GENERAL NOTES:

1. SEE SHEET WPN1 FOR STRUCTURE NOTES.
2. U.N.O. MIN LAP SPLICE LENGTHS FOR CIP SHALL BE:

FOR STEMWALL:	FOR FOOTINGS:
#5 = 32"	#4 = 25"
#6 = 40"	#5 = 31"
#7 = 70"	
#8 = 80"	

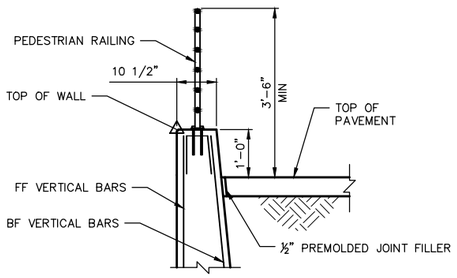

TOP OF WALL & PEDESTRIAN RAIL DETAIL (1 / –)

N.T.S.

(NOT ALL REINF. SHOWN FOR CLARITY, SEE RETAINING WALL DETAILS FOR INFORMATION NOT SHOWN)

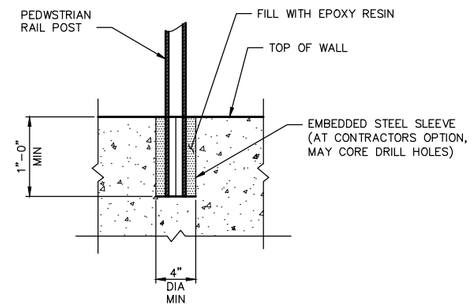

ALTERNATIVE 1

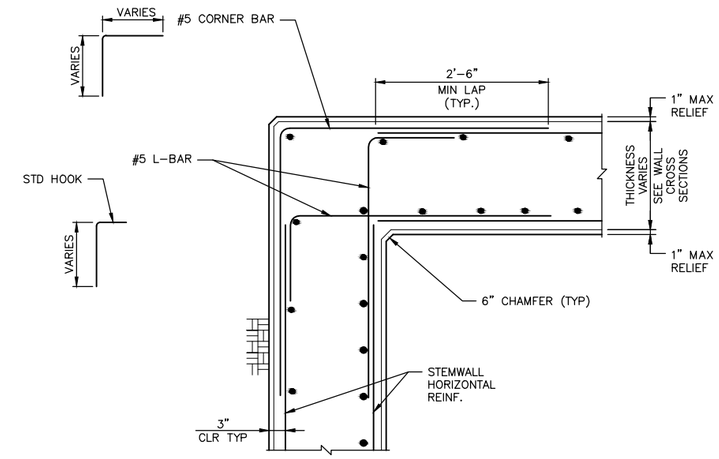

STEMWALL 90° CORNER REINF. LAYOUT (4 / –)

N.T.S.

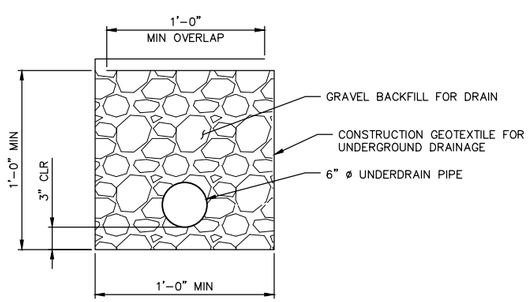

CAST-IN-PLACE WALL UNDERDRAIN DETAIL (2 / –)

NOT TO SCALE

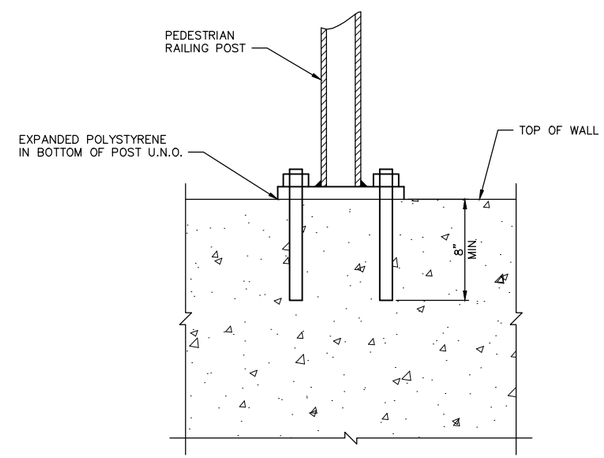

ALTERNATIVE 2

PEDESTRIAN RAIL ANCHORAGE DETAIL (3 / –)

N.T.S.

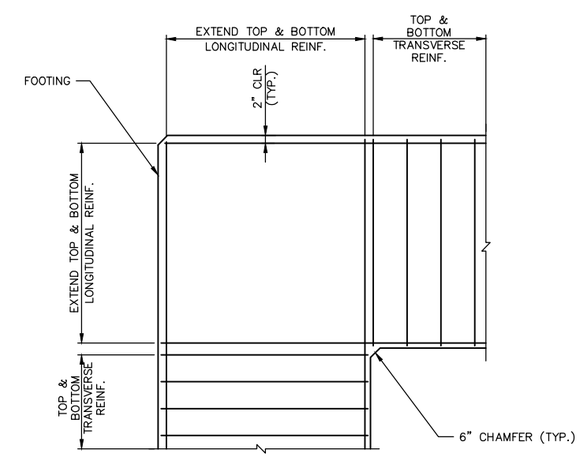

FOOTING 90° CORNER REINF. LAYOUT (5 / –)

N.T.S.

(NOT ALL REINF. SHOWN FOR CLARITY, SEE WALL SECTION AND ELEVATION FOR DETAILS)

NO.	DATE	BY	APPR.	REVISIONS

Approved By

TRANSPORTATION DESIGN MANAGER — DATE
M. ARAKELYAN
PROJECT MANAGER — DATE

J. VO — DESIGNED BY — DATE
J. FRYE — DRAWN BY — DATE
J. LEM — CHECKED BY — DATE

City of Bellevue
TRANSPORTATION DEPARTMENT

HDR

124th Ave NE - NE Spring Blvd to NE Ichigo Way

RETAINING WALL 2
TYPICAL DETAILS 1

SHEET NAME WD9

SHT 138 OF 198

GENERAL NOTES:

1. SEE PROFILE VIEW FOR WALL STATION AND ELEVATIONS.
2. EJ = EXPANSION JOINT. SEE WALL PROFILE, WP SHEETS, FOR LOCATION.

95% SUBMITTAL NOT FOR CONSTRUCTION

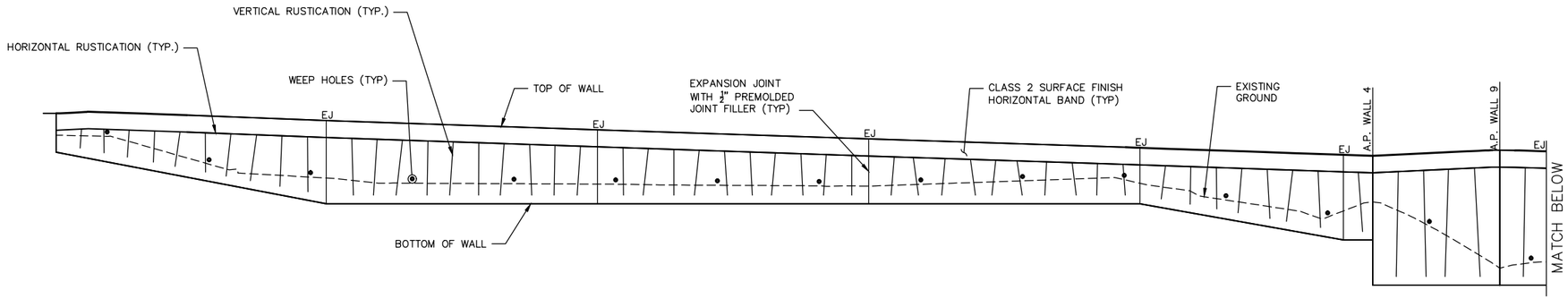

WALL 4 DEVELOPED FACING ELEVATION
N.T.S.

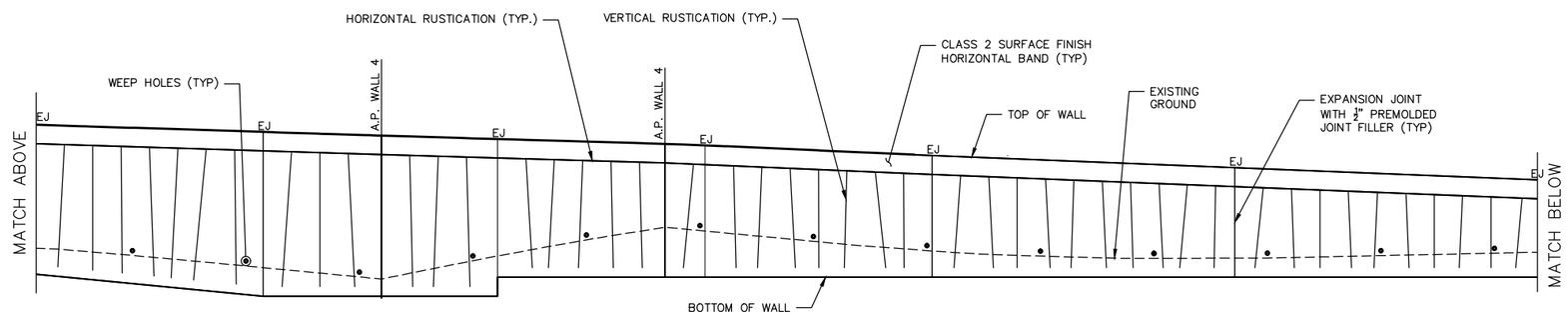

WALL 4 DEVELOPED FACING ELEVATION CONTINUED
N.T.S.

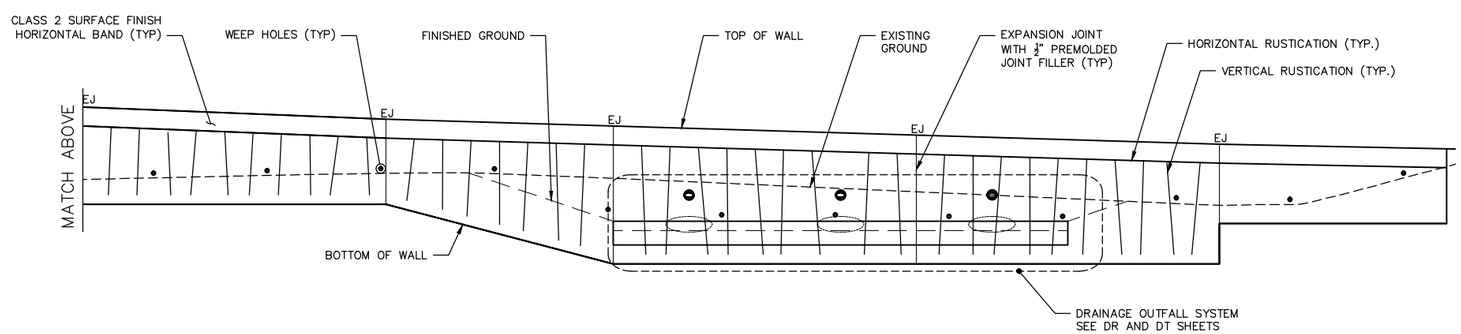

WALL 4 DEVELOPED FACING ELEVATION CONTINUED
N.T.S.

STATE OF WASHINGTON LICENSED LANDSCAPE ARCHITECT

MATTHEW C. GURRAD
LICENSE NO. 1094
EXPIRES ON _____

NO.	DATE	BY	APPR.	REVISIONS

Approved By

TRANSPORTATION DESIGN MANAGER — DATE
M. ARAKELYAN
PROJECT MANAGER — DATE

J. VO — DESIGNED BY — DATE
J. FRYE — DRAWN BY — DATE
J. LEM — CHECKED BY — DATE

City of Bellevue
TRANSPORTATION DEPARTMENT

HDR

124th Ave NE - NE Spring Blvd to NE Ichigo Way

RETAINING WALL FASCIA DETAILS
DEVELOPED ELEVATION - FRONT FACE

SHEET NAME **WD10**

GENERAL NOTES:

1. ADJUST VERTICAL RUSTICATION IN THE FIELD TO CLEAR WEEP HOLE DRAINS AND DETENTION VAULT OUTFALL SYSTEM.

95% SUBMITTAL NOT FOR CONSTRUCTION

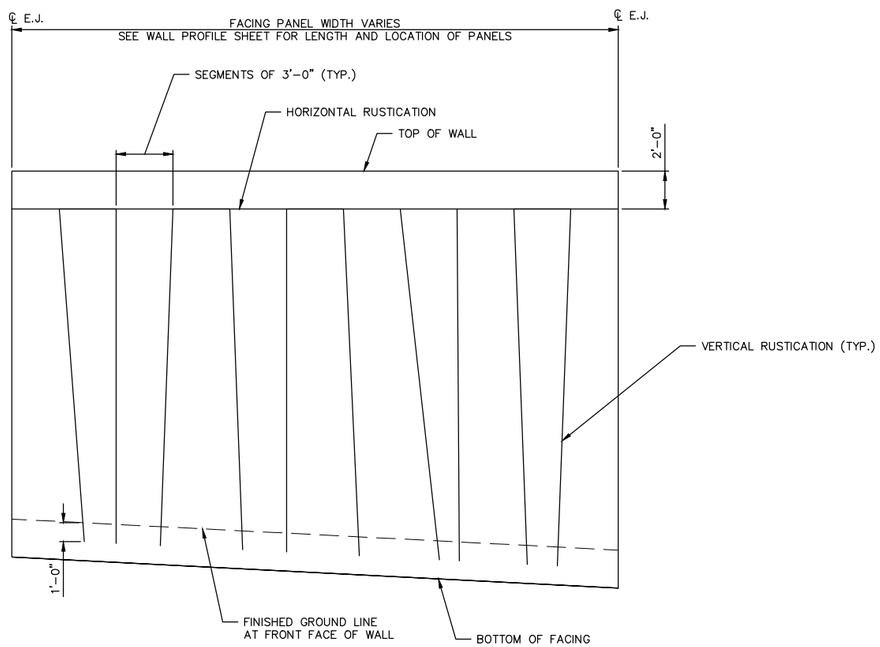

WALL 4 DEVELOPED ELEVATION – RUSTICATION PATTERN
N.T.S.

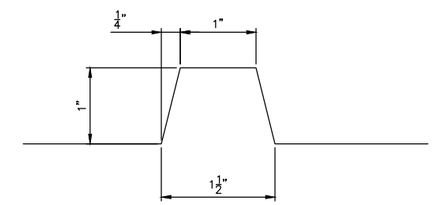

WALL 4 VERTICAL RUSTICATION DETAIL
N.T.S.

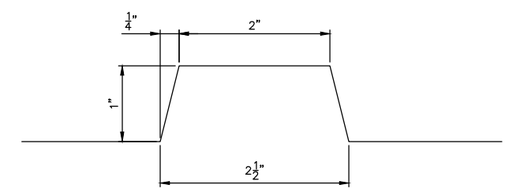

WALL 4 – HORIZONTAL RUSTICATION DETAIL
N.T.S.

STATE OF
WASHINGTON
LICENSED
LANDSCAPE ARCHITECT

MATTHEW C. GURRAD
LICENSE NO. 1094
EXPIRES ON _____

NO.	DATE	BY	APPR.	REVISIONS

Approved By

TRANSPORTATION DESIGN MANAGER — DATE
M. ARAKELYAN
PROJECT MANAGER — DATE

J. VO — DESIGNED BY — DATE
J. FRYE — DRAWN BY — DATE
J. LEM — CHECKED BY — DATE

City of Bellevue
TRANSPORTATION DEPARTMENT

HDR

124th Ave NE - NE Spring Blvd to NE Ichigo Way

RETAINING WALL FASCIA DETAILS
RUSTICATION DETAILS

SHEET NAME WD11

SHT 140 OF 198

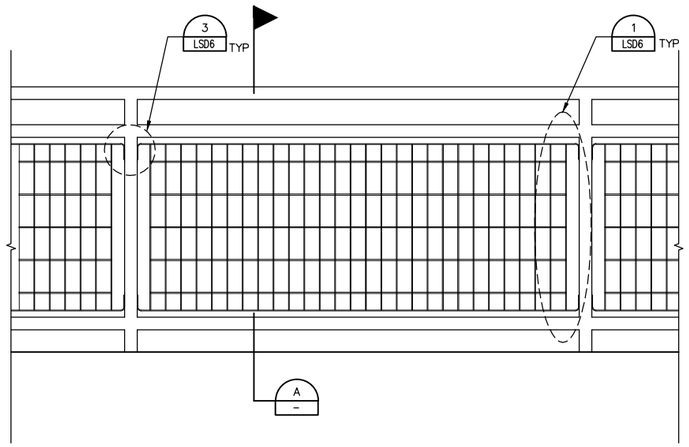

PEDESTRIAN RAILING SYSTEM – TYPE 1 (1 –)
SCALE: 1"=1'

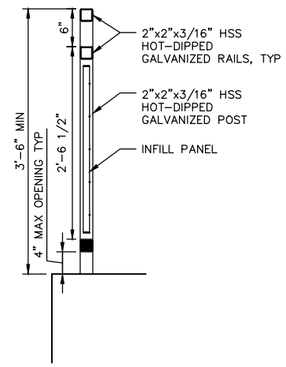

SECTION – TYPE 1 (A –)
SCALE: 1"=1'

NOTE: SEE LANDSCAPE PLANS FOR PEDESTRIAN RAILING SYSTEM TYPE LOCATIONS.

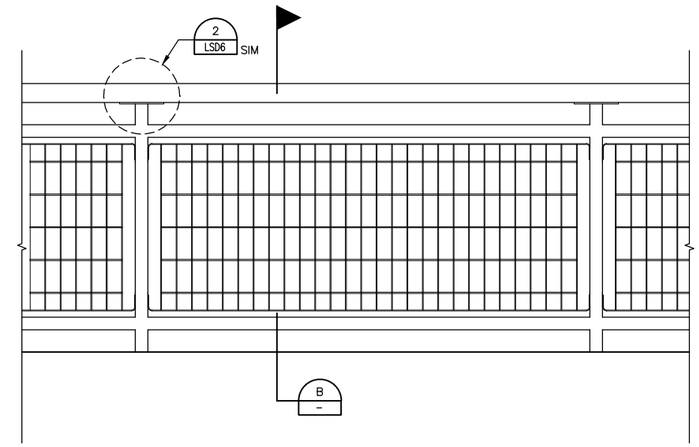

PEDESTRIAN RAILING SYSTEM – TYPE 2 (2 –)
SCALE: 1"=1'

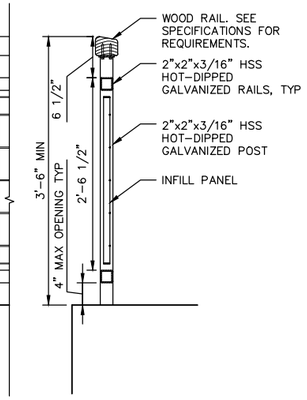

SECTION – TYPE 2 (B –)
SCALE: 1"=1'

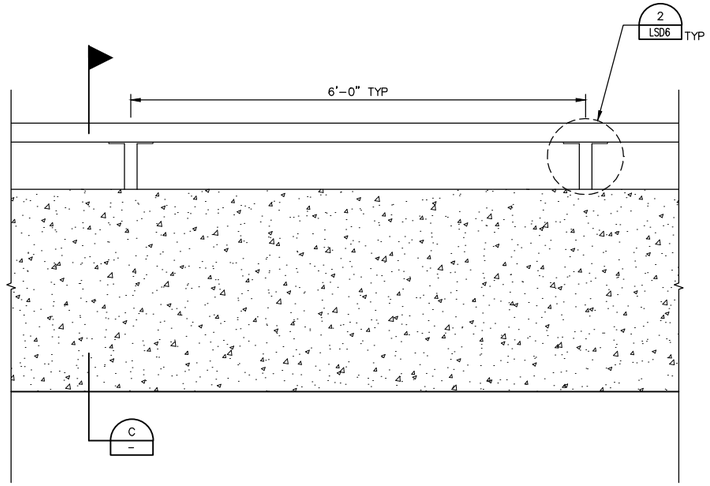

PEDESTRIAN RAILING SYSTEM – TYPE 3 (3 –)
SCALE: 1"=1'

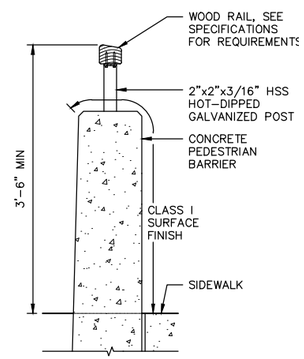

SECTION – TYPE 3 (C –)
SCALE: 1"=1'

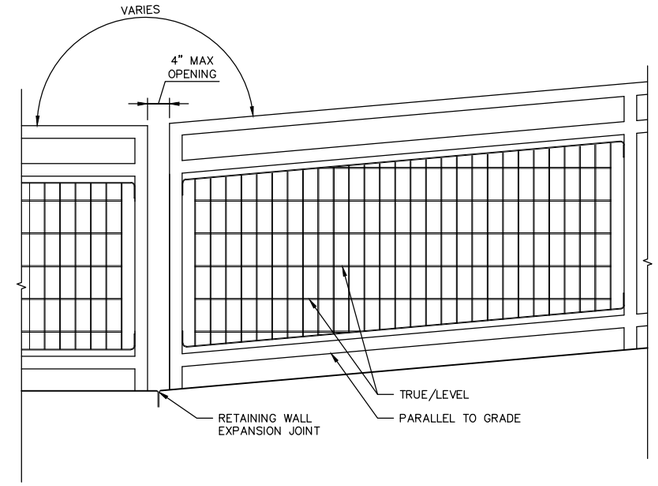

TYPICAL ELEVATION @ GRADE CHANGE OR @ WALL EXPANSION JOINTS (4 –)
SCALE: 1"=1'

STATE OF WASHINGTON LICENSED LANDSCAPE ARCHITECT

MATTHEW C. GURRAD
LICENSE NO. 1094
EXPIRES ON _____

NO.	DATE	BY	APPR.	REVISIONS

Approved By

TRANSPORTATION DESIGN MANAGER — DATE
M. ARAKELYAN
PROJECT MANAGER — DATE

M. GURRAD — DESIGNED BY — DATE
M. GURRAD — DRAWN BY — DATE
L. PATY — CHECKED BY — DATE

City of Bellevue
TRANSPORTATION DEPARTMENT

HDR

124th Ave NE - NE Spring Blvd to NE Ichigo Way

PEDESTRIAN RAILING AND THROW FENCE DETAILS

SHEET NAME PRD01

SHT 141 OF 198

95% SUBMITTAL NOT FOR CONSTRUCTION

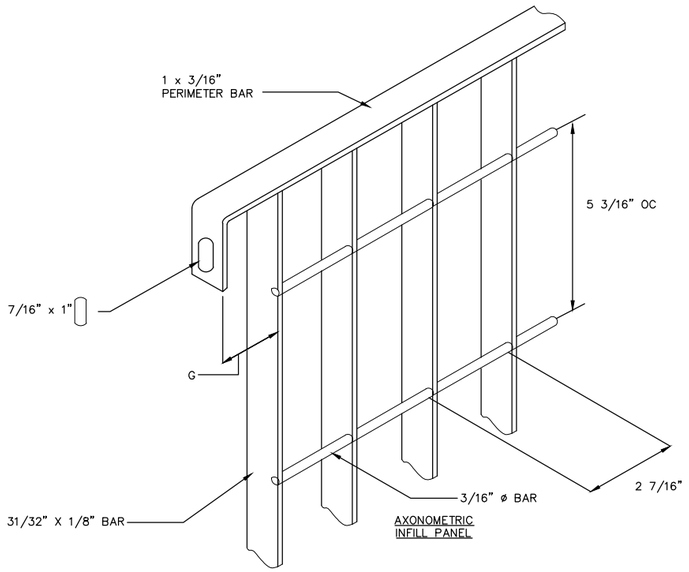

AXONOMETRIC
INFILL PANEL

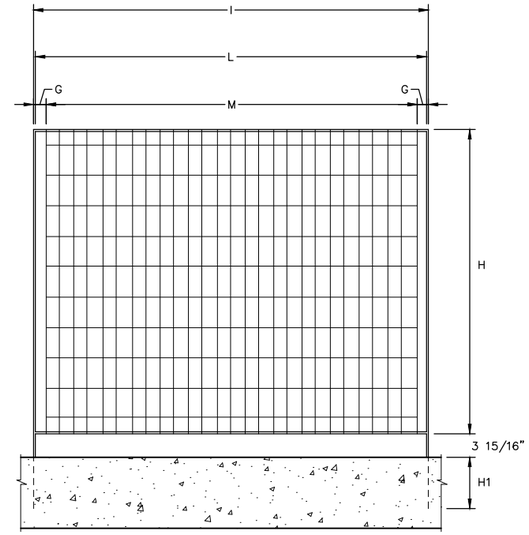

ELEVATION

H	PANEL HEIGHT	UP TO 144" HIGH
H1	ANCHORE LENGTH*	8" UP TO 60" HIGH 10" UP TO 80" HIGH 12" UP TO 96" HIGH 18" OVER 96" HIGH
I	POST WIDTH	78-3/4" MAXIMUM
L	PANEL WIDTH	78-7/16" MAXIMUM
M	WIDTH OF GRILLE	73-11/32" MAXIMUM
G	LUG PROJECTION	2-7/16" MAXIMUM
	POST SIZE*	2-1/2" X 5/16" FLAT BAR UP TO 60" HIGH 3-1/2" X 5/16" FLAT BAR UP TO 96" HIGH 2" X 2" SQUARE TUBE OVER 96" HIGH
*FINAL DETERMINATION OF ANCHORE LENGTH AND POST SIZE IS BASED ON PANEL SIZE, SITE CONDITIONS AND DESIGN CONSIDERATION.		

NOTES:
1. INSTALLATION TO BE COMPLETED IN ACCORDANCE WITH MANUFACTURER'S SPECIFICATIONS.
2. DO NOT SCALE DRAWINGS.
3. ALL STEEL RAILING COMPONENTS TO BE HOT-DIPPED GALVANIZED.

TYPICAL PANEL COMPONENTS (1)
SCALE: N.T.S.

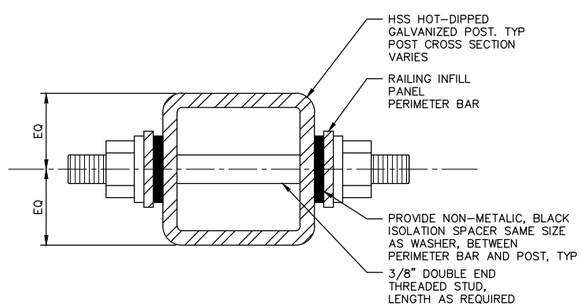

PANEL MOUNTING DETAIL (3)
SCALE: N.T.S.

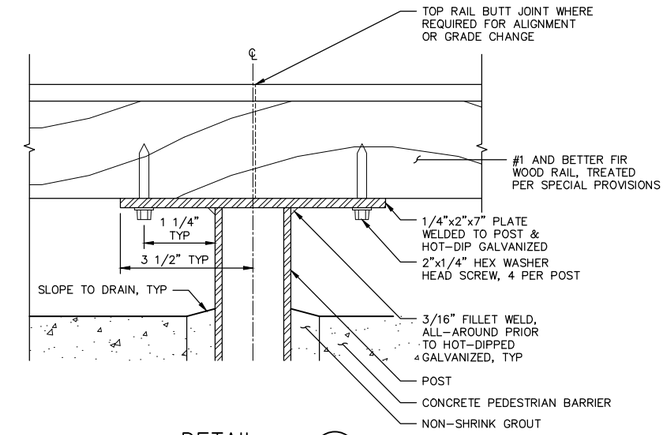

DETAIL (2)
SCALE: N.T.S.

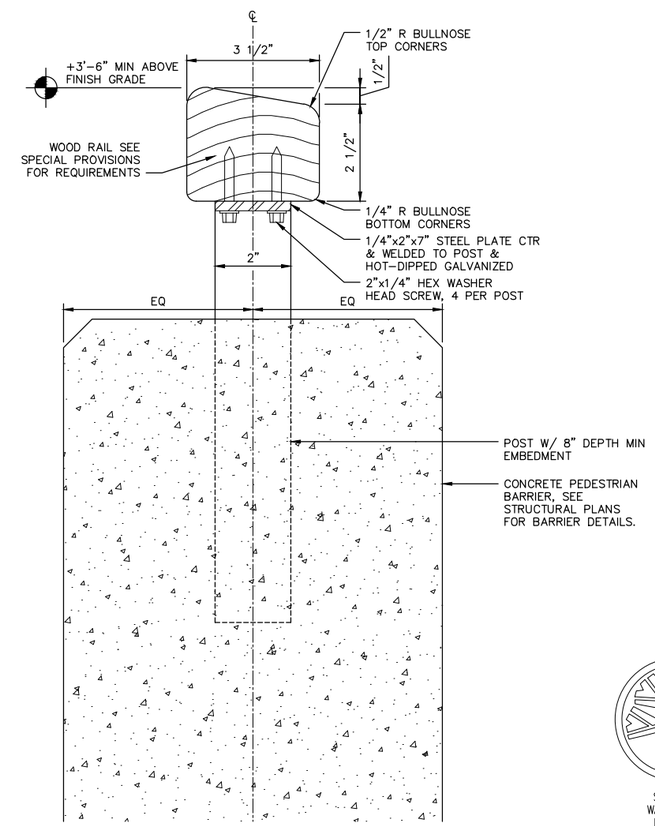

DETAIL (4)
SCALE: N.T.S.

STATE OF
WASHINGTON
LICENSED
LANDSCAPE ARCHITECT

MATTHEW C. GURRAD
LICENSE NO. 1094
EXPIRES ON _____

NO.	DATE	BY	APPR.	REVISIONS

Approved By

TRANSPORTATION DESIGN MANAGER — DATE
M. ARAKELYAN
PROJECT MANAGER — DATE

M. GURRAD — DESIGNED BY — DATE
M. GURRAD — DRAWN BY — DATE
L. PATY — CHECKED BY — DATE

City of Bellevue
TRANSPORTATION DEPARTMENT

HDR

124th Ave NE - NE Spring Blvd to NE Ichigo Way

PEDESTRIAN RAILING AND THROW FENCE DETAILS

SHEET NAME **PRD02**

SHT 142 OF 198

GENERAL NOTES:

1. UNLESS OTHERWISE NOTED, ALL DIMENSIONS ARE IN FEET.
2. FOR SIGNING DETAILS SEE SIGNING SHEETS.
3. FOR TRAFFIC ISLAND CURB PAINTING SEE TRAFFIC ISLAND DETAIL SHEET
4. FOR PAVING DIMENSIONS SEE PAVING PLANS.

SECTION 28, T. 25 N., R5E., W.M.
KING COUNTY

95% SUBMITTAL NOT FOR CONSTRUCTION

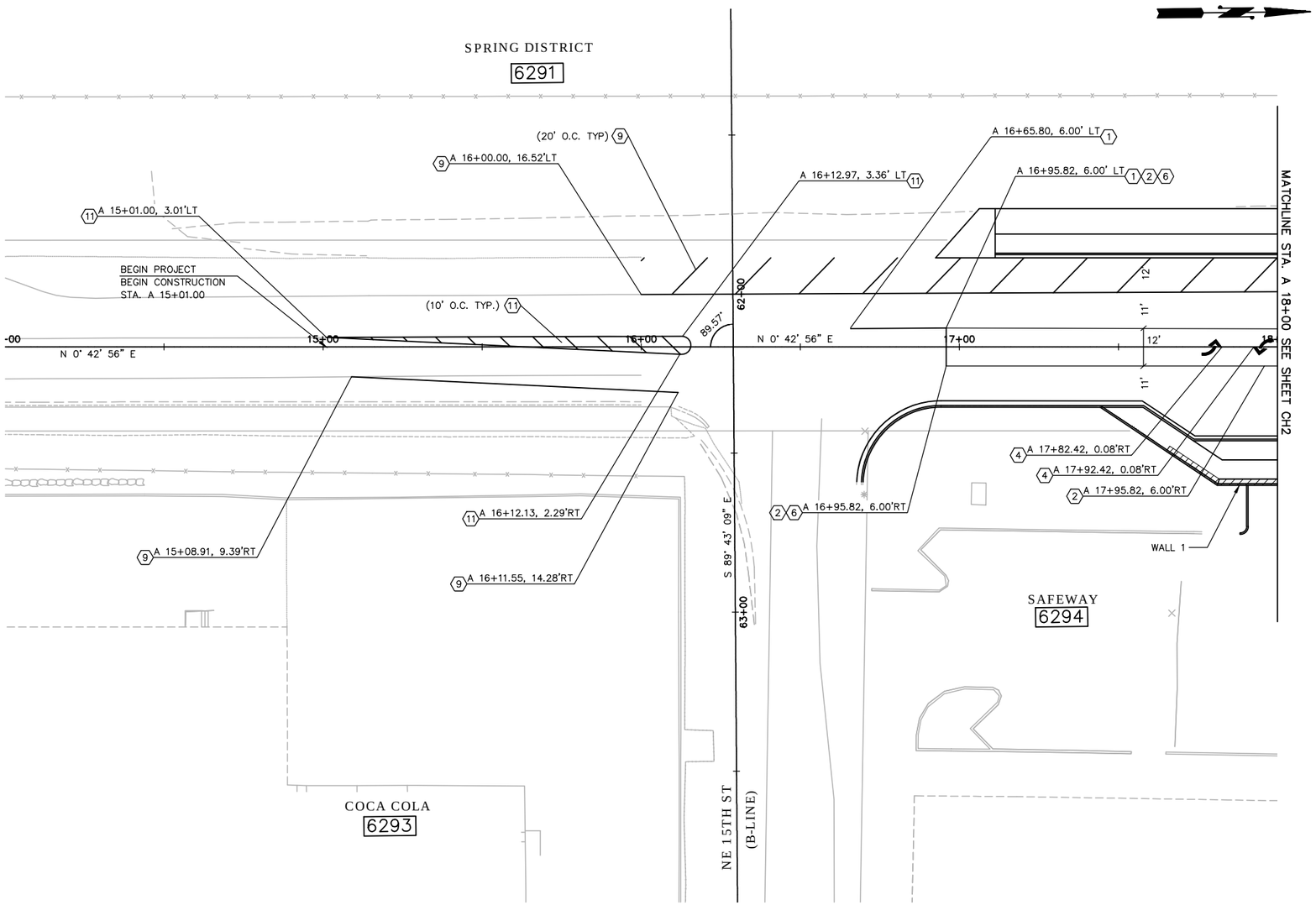

CHANNELIZATION NOTES

1. INSTALL WHITE SOLID LANE LINE USING TYPE 1 AND TYPE 2 RPMS PER COB STD. DWG. NO TE-4A AND TE-5.
2. INSTALL TWO-WAY LEFT TURN LINE USING TYPE 1 AND TYPE 2 RPMS PER COB STD. DWG. NO TE-4A AND TE-5.
4. INSTALL PLASTIC ARROW PER COB STD. DWG. NO TE-6.
6. INSTALL 12" PLASTIC STOP LINE PER WSDOT STD PAN M-24.60-03.
9. INSTALL 4" WIDE WHITE PAINT STRIPE.
11. INSTALL 4" WIDE YELLOW PAINT STRIPE

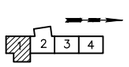

KEY PLAN

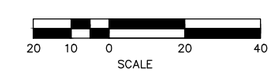

NO.	DATE	BY	APPR.	REVISIONS

Approved By

TRANSPORTATION DESIGN MANAGER — DATE
M. ARAKELYAN
PROJECT MANAGER — DATE

S. HAYS — DESIGNED BY — DATE
J. FRYE — DRAWN BY — DATE
G. ROYCROFT — CHECKED BY — DATE

City of Bellevue
TRANSPORTATION DEPARTMENT

HDR

124th Ave NE - NE Spring Blvd to NE Ichigo Way

CHANNELIZATION PLAN
BEGIN TO STA. A 18+00

SHEET NAME CH1

SHT 143 OF 198

GENERAL NOTES:

1. UNLESS OTHERWISE NOTED, ALL DIMENSIONS ARE IN FEET.
2. FOR SIGNING DETAILS SEE SIGNING SHEETS.
3. FOR TRAFFIC ISLAND CURB PAINTING SEE TRAFFIC ISLAND DETAIL SHEET
4. FOR PAVING DIMENSIONS SEE PAVING PLANS.

SECTION 28, T. 25 N., R5E., W.M.
KING COUNTY

95% SUBMITTAL NOT FOR CONSTRUCTION

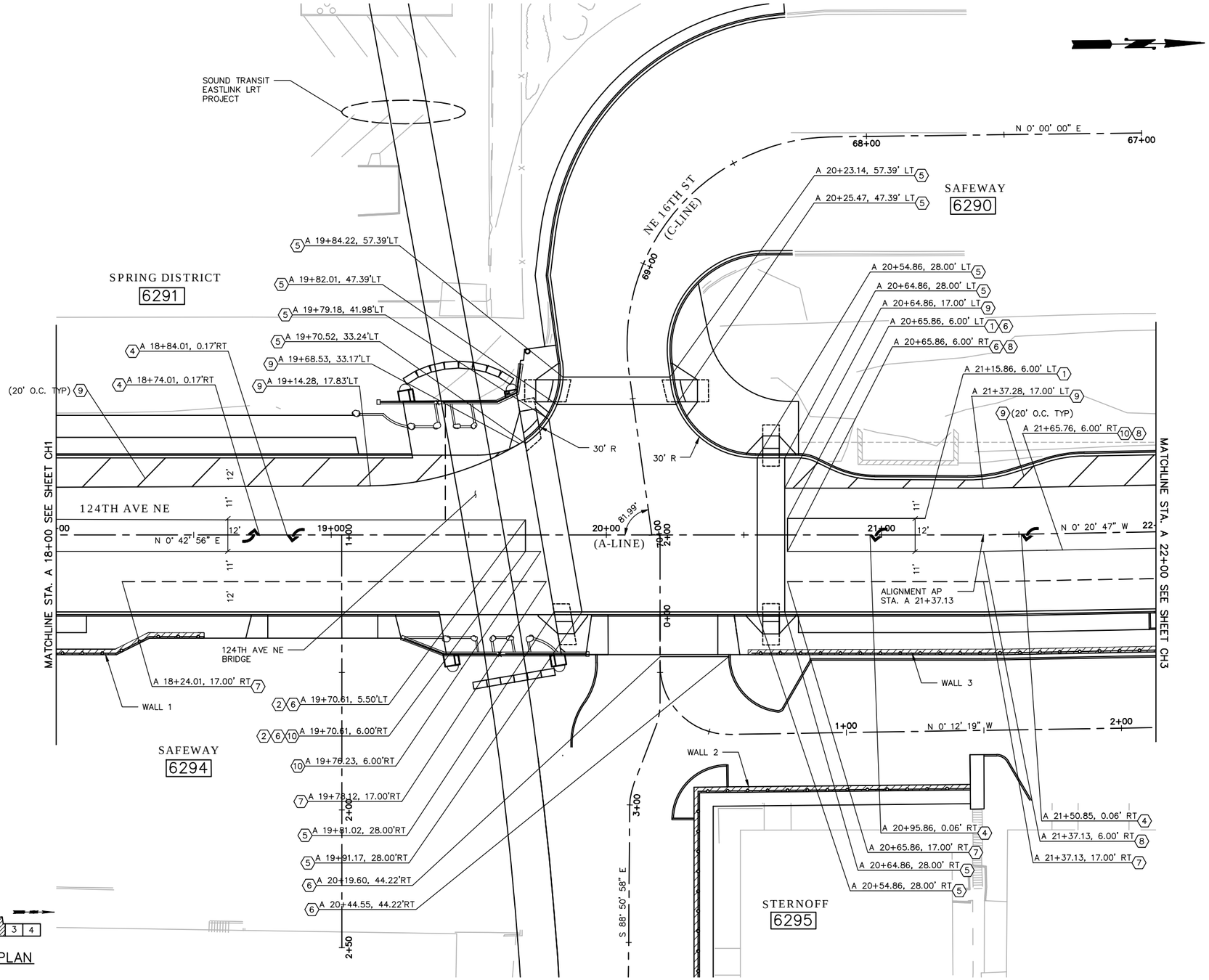

CHANNELIZATION NOTES

1. INSTALL WHITE SOLID LANE LINE USING TYPE 1 AND TYPE 2 RPMS PER COB STD. DWG. NO TE-4A AND TE-5.
2. INSTALL TWO-WAY LEFT TURN LINE USING TYPE 1 AND TYPE 2 RPMS PER COB STD. DWG. NO TE-4A AND TE-5.
4. INSTALL PLASTIC ARROW PER COB STD. DWG. NO TE-6.
5. INSTALL PLASTIC CROSSWALK MARKING PER COB STD. DWG. NO TE-7A AND TE-7B.
6. INSTALL 12" PLASTIC STOP LINE PER WSDOT STD PAN M-24.60-03.
7. INSTALL WHITE BROKEN LANE LINE USING TYPE 1 AND TYPE 2 RPMS PER COB STD. DWG. TE-4A AND TE-5.
8. INSTALL DOUBLE CENTER LINE USING TYPE 1 AND TYPE 2 RPMS PER COB STD. DWG. TE-4A AND TE-5.
9. INSTALL 4" WIDE WHITE PAINT STRIPE.
10. INSTALL YELLOW EDGE LINE USING TYPE 1 AND TYPE 2 RPMS PER COB STD. DWG. TE-4A AND TE-5

KEY PLAN

SCALE 20 10 0 20 40

PAUL A. FERRIER STATE OF WASHINGTON 43172 REGISTERED PROFESSIONAL ENGINEER

NO.	DATE	BY	APPR.	REVISIONS

Approved By

TRANSPORTATION DESIGN MANAGER — DATE
M. ARAKELYAN
PROJECT MANAGER — DATE

S. HAYS — DESIGNED BY — DATE
J. FRYE — DRAWN BY — DATE
G. ROYCROFT — CHECKED BY — DATE

City of Bellevue
TRANSPORTATION DEPARTMENT

HDR

124th Ave NE - NE Spring Blvd to NE Ichigo Way

CHANNELIZATION PLAN
STA. A 18+00 TO STA. A 22+00

SHEET NAME CH2

SHT 144 OF 198

GENERAL NOTES:

1. UNLESS OTHERWISE NOTED, ALL DIMENSIONS ARE IN FEET.
2. FOR SIGNING DETAILS SEE SIGNING SHEETS.
3. FOR TRAFFIC ISLAND CURB PAINTING SEE TRAFFIC ISLAND DETAIL SHEET
4. FOR PAVING DIMENSIONS SEE PAVING PLANS.

SECTION 28, T. 25 N., R5E., W.M.
KING COUNTY

95% SUBMITTAL NOT FOR CONSTRUCTION

CHANNELIZATION NOTES

(4) INSTALL PLASTIC ARROW PER COB STD. DWG. NO TE-6.
(7) INSTALL WHITE BROKEN LANE LINE USING TYPE 1 AND TYPE 2 RPMS PER COB STD. DWG. TE-4A AND TE-5.
(9) INSTALL 4" WIDE WHITE PAINT STRIPE.
(10) INSTALL YELLOW EDGE LINE USING TYPE 1 AND TYPE 2 RPMS PER COB STD. DWG. TE-4A AND TE-5

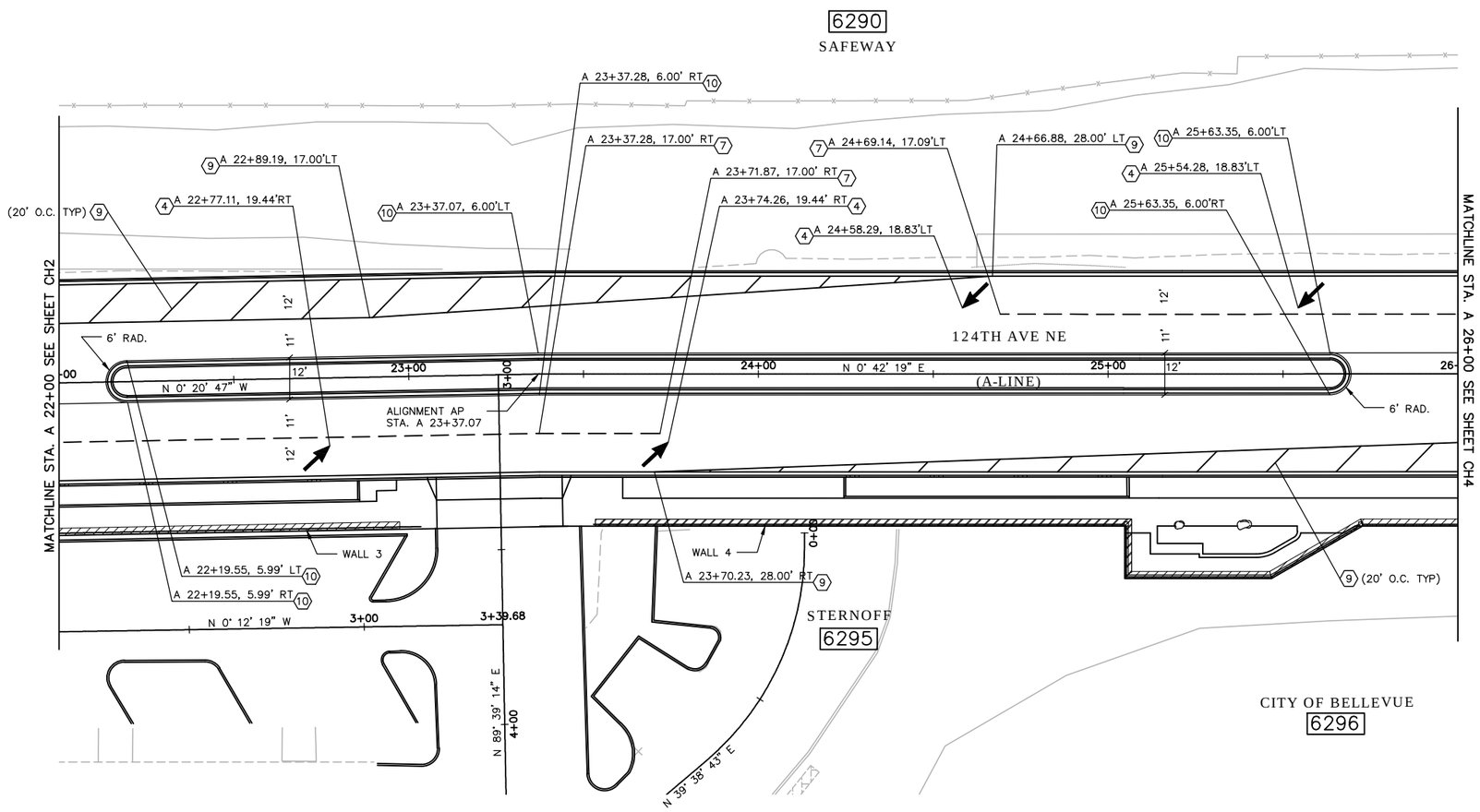

KEY PLAN

SCALE 20 10 0 20 40

NO.	DATE	BY	APPR.	REVISIONS

Approved By

TRANSPORTATION DESIGN MANAGER — DATE
M. ARAKELYAN
PROJECT MANAGER — DATE

S. HAYS — DESIGNED BY — DATE
J. FRYE — DRAWN BY — DATE
G. ROYCROFT — CHECKED BY — DATE

City of Bellevue
TRANSPORTATION DEPARTMENT

HDR

124th Ave NE - NE Spring Blvd to NE Ichigo Way

CHANNELIZATION PLAN
STA. A 22+00 TO STA. A 26+00

SHEET NAME CH3

SHT 145 OF 198

GENERAL NOTES:

1. UNLESS OTHERWISE NOTED, ALL DIMENSIONS ARE IN FEET.
2. FOR SIGNING DETAILS SEE SIGNING SHEETS.
3. FOR TRAFFIC ISLAND CURB PAINTING SEE TRAFFIC ISLAND DETAIL SHEET
4. FOR PAVING DIMENSIONS SEE PAVING PLANS.

SECTION 28, T. 25 N., R5E., W.M.
KING COUNTY

95% SUBMITTAL NOT FOR CONSTRUCTION

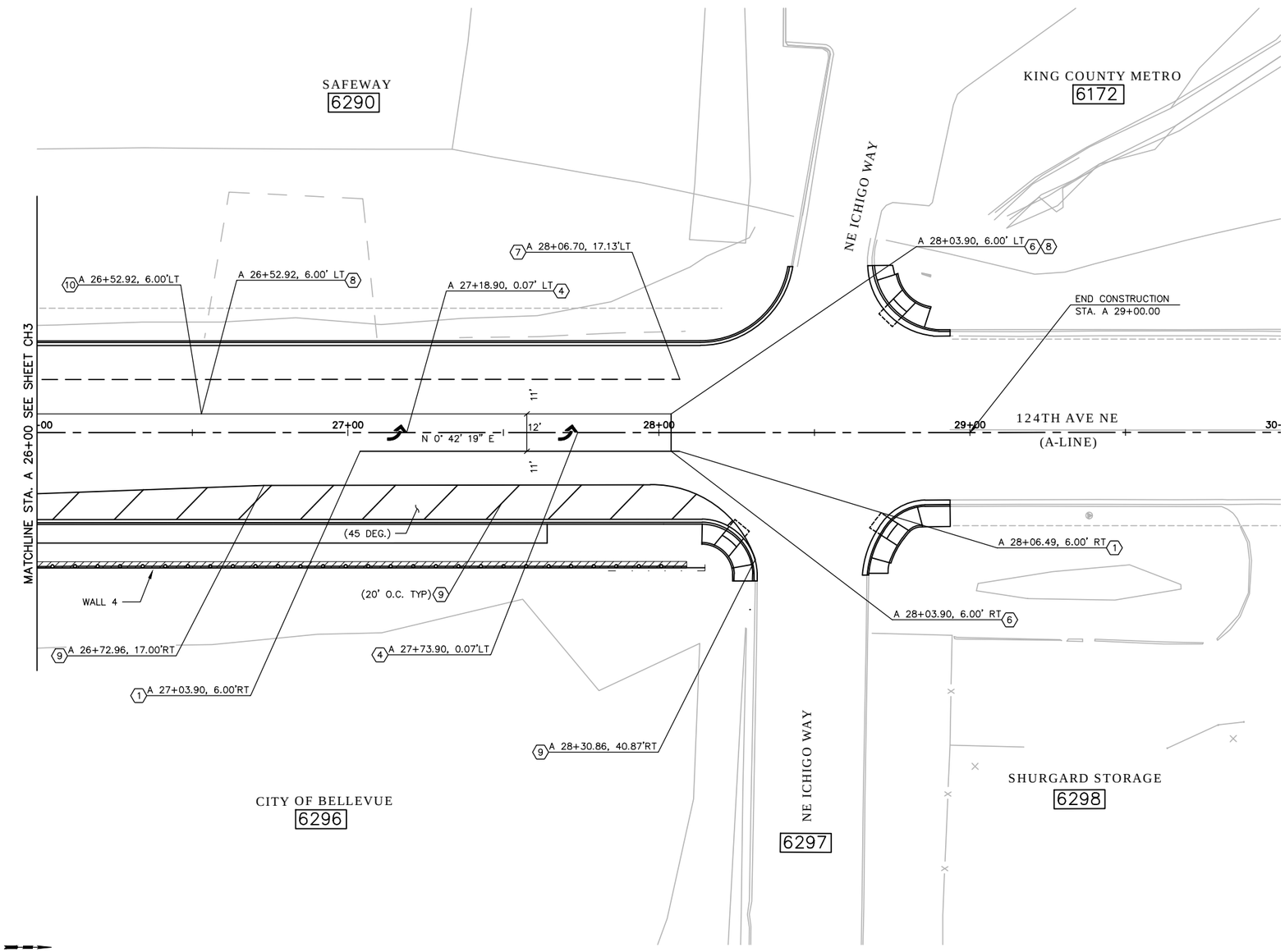

CHANNELIZATION NOTES

1. INSTALL WHITE SOLID LANE LINE USING TYPE 1 AND TYPE 2 RPMS PER COB STD. DWG. NO TE-4A AND TE-5.
4. INSTALL PLASTIC ARROW PER COB STD. DWG. NO TE-6.
6. INSTALL 12" PLASTIC STOP LINE PER WSDOT STD PAN M-24.60-03.
7. INSTALL WHITE BROKEN LANE LINE USING TYPE 1 AND TYPE 2 RPMS PER COB STD. DWG. TE-4A AND TE-5.
8. INSTALL DOUBLE CENTER LINE USING TYPE 1 AND TYPE 2 RPMS PER COB STD. DWG. TE-4A AND TE-5.
9. INSTALL 4" WIDE WHITE PAINT STRIPE.
10. INSTALL YELLOW EDGE LINE USING TYPE 1 AND TYPE 2 RPMS PER COB STD. DWG. TE-4A AND TE-5

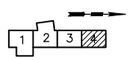

KEY PLAN

20 10 0 20 40
SCALE

PAUL A. FERRER STATE OF WASHINGTON 43172 REGISTERED PROFESSIONAL ENGINEER

NO.	DATE	BY	APPR.	REVISIONS

Approved By

TRANSPORTATION DESIGN MANAGER — DATE
M. ARAKELYAN
PROJECT MANAGER — DATE

S. HAYS — DESIGNED BY — DATE
J. FRYE — DRAWN BY — DATE
G. ROYCROFT — CHECKED BY — DATE

City of Bellevue
TRANSPORTATION DEPARTMENT

HDR

124th Ave NE - NE Spring Blvd to NE Ichigo Way

CHANNELIZATION PLAN
STA. A 26+00 TO END

SHEET NAME CH4

SECTION 28, T. 25 N., R5E., W.M.
KING COUNTY

95% SUBMITTAL NOT FOR CONSTRUCTION

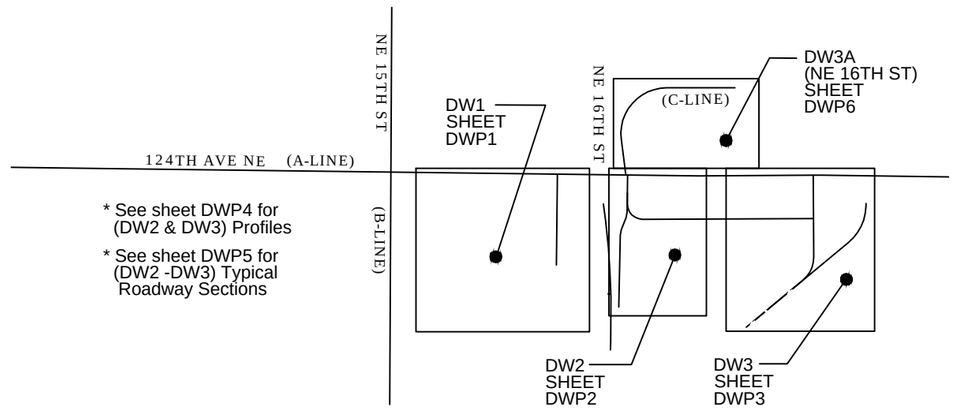

DRIVEWAY APPROACH KEY PLAN

NTS

DRIVEWAY APPROACH LEGEND

- CEMENT CONCRETE SIDEWALK
- CEMENT CONCRETE PAVEMENT
- CEMENT CONCRETE CROSSWALK
- CONCRETE
- ASPHALT PAVEMENT – HMA CL 1/2 IN. PG 70–22
- ASPHALT PARKING LOT – HMA CL 1/2 IN. PG 64–22
- CEMENT LANDING
- PIGMENTED CEMENT CONC.
- CUT — CUT LINE
- FILL — FILL LINE

DRIVEWAY APPROACH SECTION LEGEND

1. HMA CL 1/2 IN., PG 70–22
2. HMA CL 1/2 IN., PG 64–22 (COB STD. DWG. TE–11)
3. CEMENT CONC. PAVEMENT
4. CRUSHED SURFACING TOP COURSE
5. GRAVEL BORROW INCL. HAUL
6. CEMENT CONC. SIDEWALK (COB STD. DWG. TE–11)
7. TOP SOIL – TYPE A
8. CEMENT CONCRETE TRAFFIC CURB AND GUTTER (COB STD. DWG. TE–10)
9. CEMENT CONCRETE TRAFFIC CURB (COB STD. DWG. TE–10)
10. 18" CEMENT CONCRETE TRAFFIC CURB AND GUTTER (SEE PVD1)
11. GRAVEL BACKFILL FOR STRUCTURAL EARTH WALL

PAUL A. FERRER
STATE OF WASHINGTON
43172
REGISTERED
PROFESSIONAL ENGINEER

NO.	DATE	BY	APPR.	REVISIONS

Approved By

TRANSPORTATION DESIGN MANAGER — DATE
M. ARAKELYAN
PROJECT MANAGER — DATE

S. HAYS
DESIGNED BY — DATE
J. FRYE
DRAWN BY — DATE
G. ROYCROFT
CHECKED BY — DATE

City of Bellevue
TRANSPORTATION DEPARTMENT

HDR

124th Ave NE - NE Spring Blvd to NE Ichigo Way

DRIVEWAY APPROACH KEY PLAN & LEGEND

SHEET NAME DWP0

SHT 147 OF 198

GENERAL NOTES:

1. UNLESS OTHERWISE NOTED, ALL DIMENSIONS ARE IN FEET AND INCHES.
2. SEE SHEET DWP0 FOR KEY PLAN AND LEGEND.
3. SAW CUT ASPHALT AND CONCRETE PAVEMENT AT JOINTS BETWEEN NEW AND EXISTING PAVEMENT.

SECTION 28, T. 25 N., R5E., W.M.
KING COUNTY

95% SUBMITTAL NOT FOR CONSTRUCTION

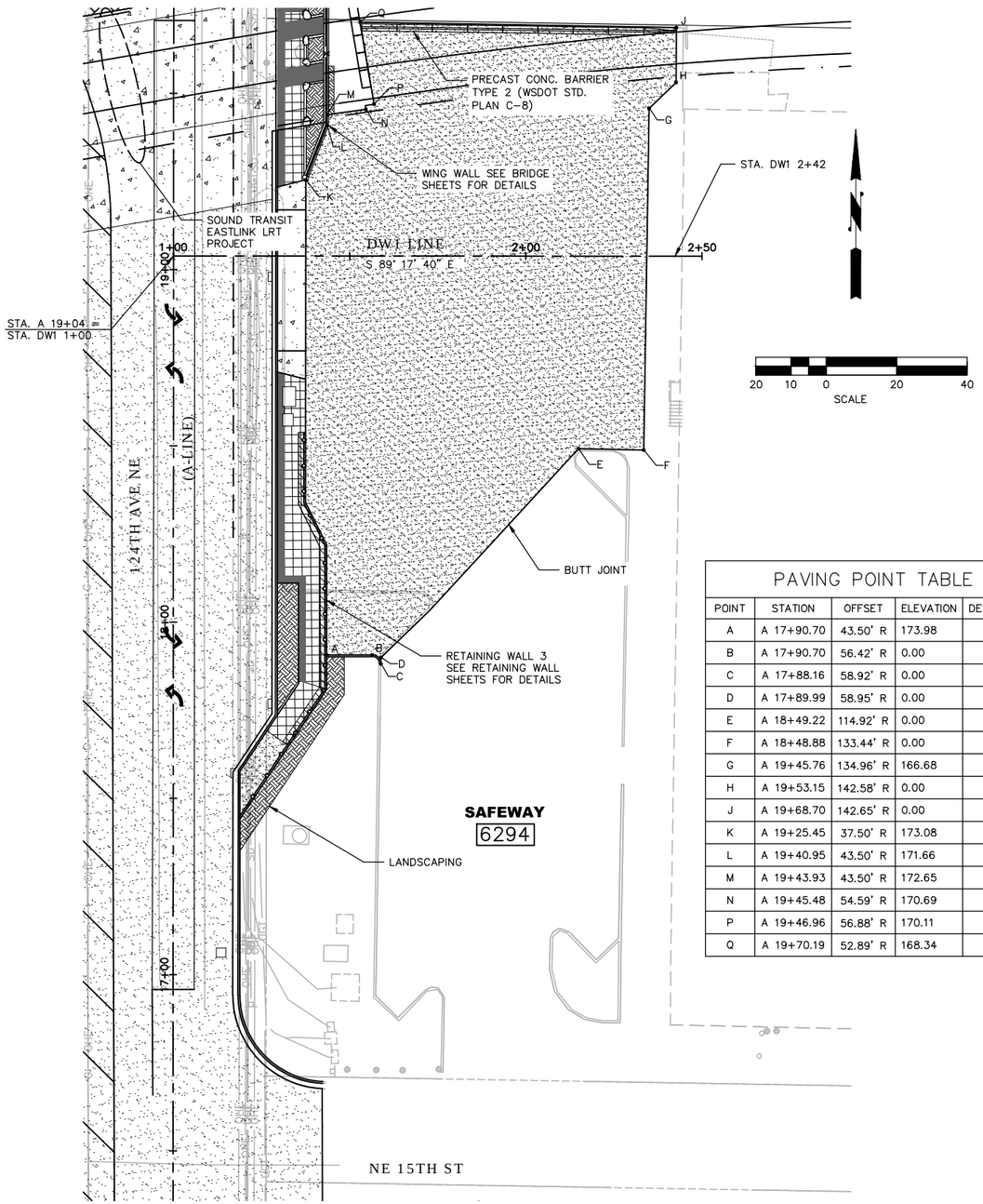

DW1 LINE PLAN

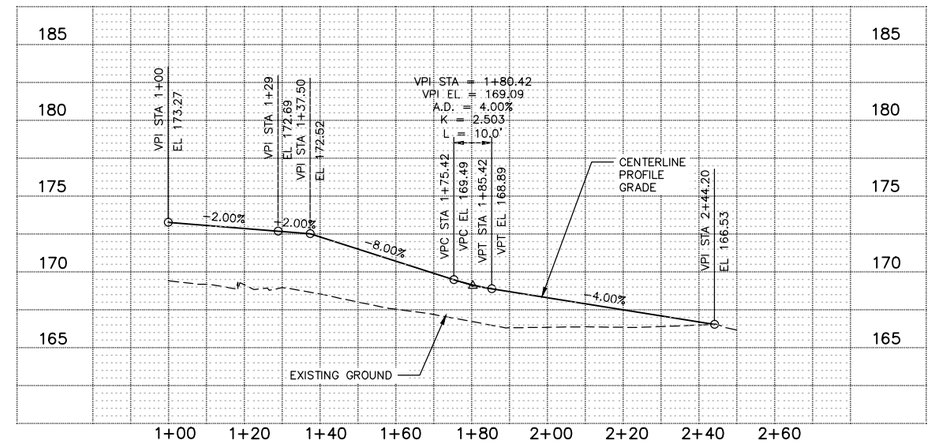

DW1 LINE PROFILE

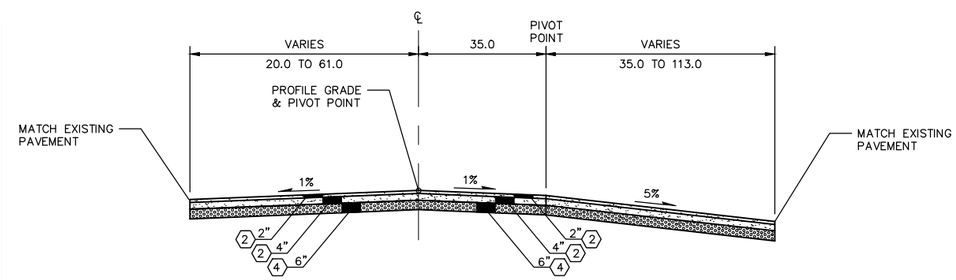

DW1 APPROACH SECTION A

STA. DW1 1+37.50 TO 2+32.75

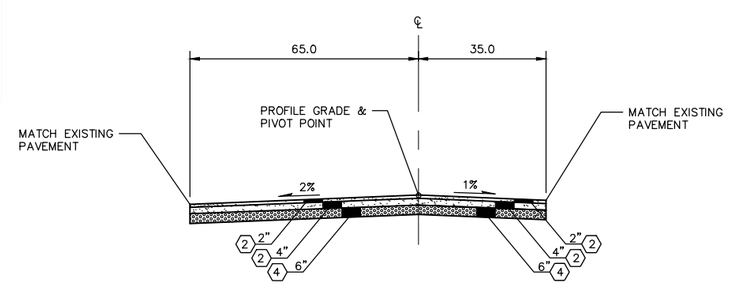

DW1 APPROACH SECTION B

STA. DW1 2+32.75 TO 2+42.37

PAVING POINT TABLE

POINT	STATION	OFFSET	ELEVATION	DESCRIPTION
A	A 17+90.70	43.50' R	173.98	
B	A 17+90.70	56.42' R	0.00	
C	A 17+88.16	58.92' R	0.00	
D	A 17+89.99	58.95' R	0.00	
E	A 18+49.22	114.92' R	0.00	
F	A 18+48.88	133.44' R	0.00	
G	A 19+45.76	134.96' R	166.68	
H	A 19+53.15	142.58' R	0.00	
J	A 19+68.70	142.65' R	0.00	
K	A 19+25.45	37.50' R	173.08	
L	A 19+40.95	43.50' R	171.66	
M	A 19+43.93	43.50' R	172.65	
N	A 19+45.48	54.59' R	170.69	
P	A 19+46.96	56.88' R	170.11	
Q	A 19+70.19	52.89' R	168.34	

QUANTITIES TABLE:

ITEM	QTY	UNITS
HMA CL 64-22	532	TONS
CSTC	480	TONS
ROADWAY EXC.	302	CY
PRECAST CONC. BARRIER TYPE 2	9	EACH
GRAVEL BORROW INCL. HAUL	582	CY

PAUL A. FERRIER STATE OF WASHINGTON 43172 REGISTERED PROFESSIONAL ENGINEER

NO.	DATE	BY	APPR.	REVISIONS

Approved By

TRANSPORTATION DESIGN MANAGER — DATE
M. ARAKELYAN
PROJECT MANAGER — DATE

S. HAYS — DESIGNED BY — DATE
J. FRYE — DRAWN BY — DATE
G. ROYCROFT — CHECKED BY — DATE

City of Bellevue
TRANSPORTATION DEPARTMENT

HDR

124th Ave NE - NE Spring Blvd to NE Ichigo Way

DRIVEWAY APPROACH PLAN & PROFILE

SHEET NAME DWP1

SHT 148 OF 198

GENERAL NOTES:

1. UNLESS OTHERWISE NOTED, ALL DIMENSIONS ARE IN FEET AND INCHES.
2. SEE SHEET DWP0 FOR KEY PLAN AND LEGEND.
3. SAW CUT ASPHALT AND CONCRETE PAVEMENT AT JOINTS BETWEEN NEW AND EXISTING PAVEMENT.

SECTION 28, T. 25 N., R5E., W.M.
KING COUNTY

95% SUBMITTAL NOT FOR CONSTRUCTION

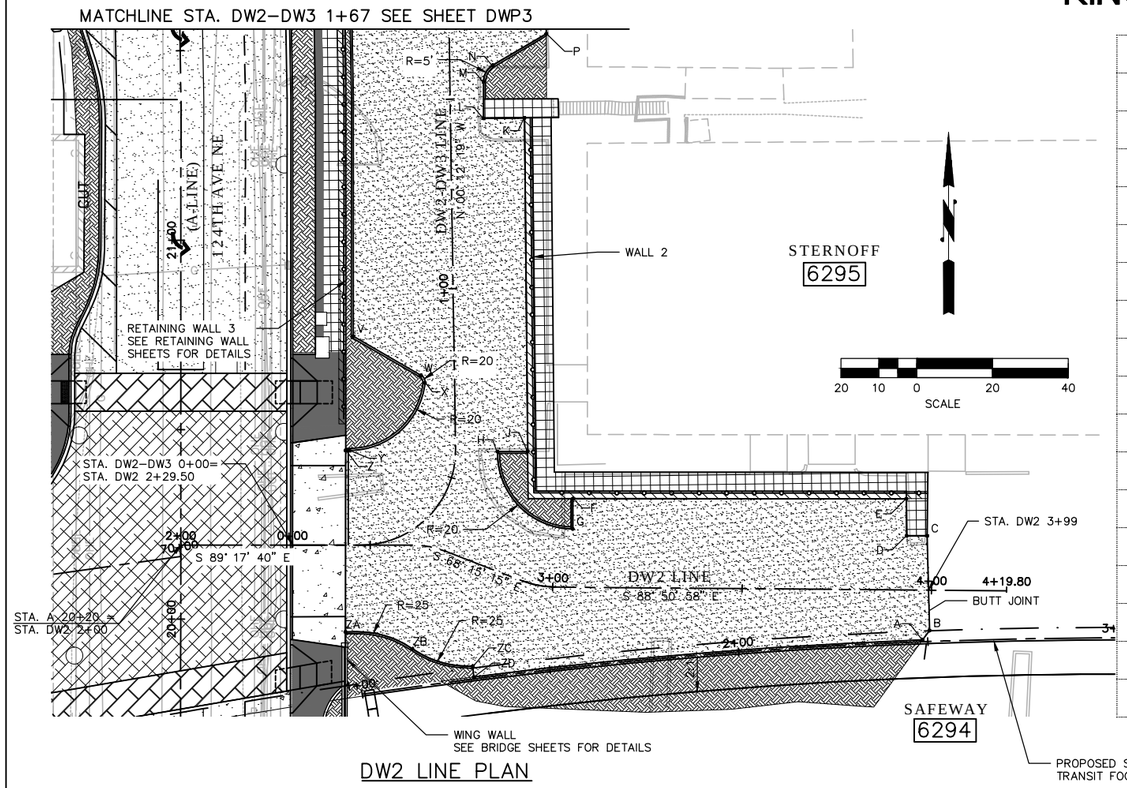

DW2 LINE PLAN

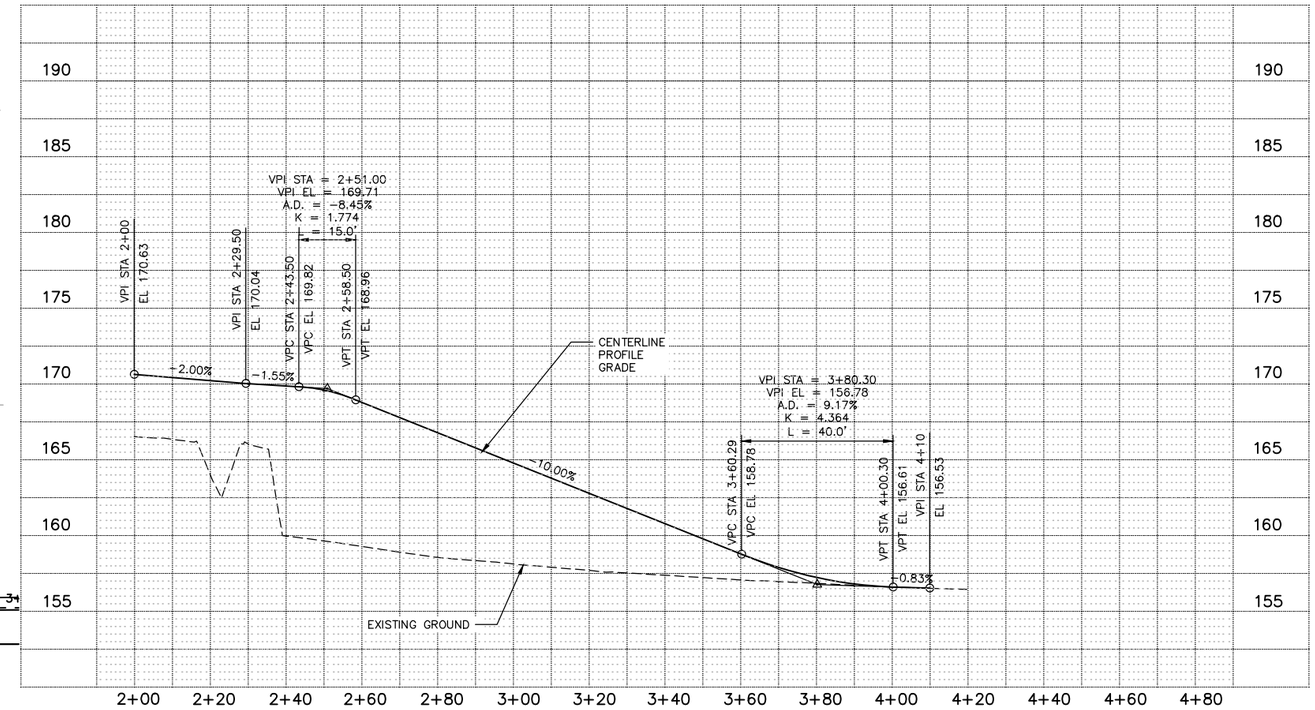

DW2 LINE PROFILE

CURVE DATA					
P.I.STATION	DELTA	RADIUS	TANGENT	LENGTH	S
DW2 2+61.02	21°02'25" RT	25.00'	4.64'	9.18'	–
DW2 2+91.72	20°35'43" LT	25.00'	4.54'	8.99'	–
DW2–3 0+18.02	90°54'39" LT	25.00'	25.41'	39.67'	–

QUANTITIES TABLE:

ITEM	QTY	UNITS
HMA CL 64–22	252	TONS
CSTC	228	TONS
ROADWAY EXC.	97	CY
GRAVEL BORROW INCL. HAUL	1163	CY

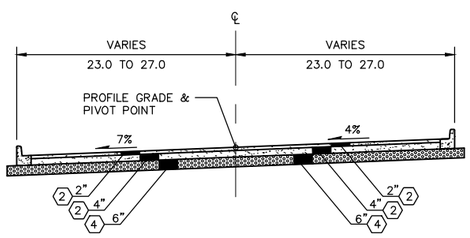

DW2 APPROACH SECTION A

STA. DW2 2+43.50 TO 2+70.30

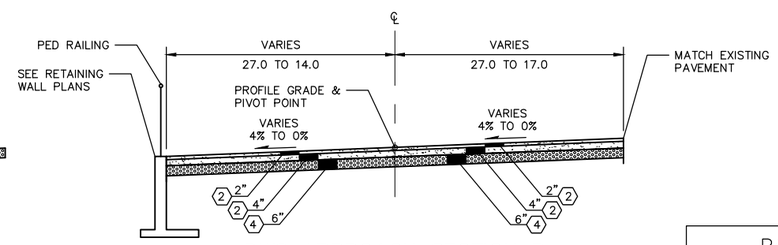

DW2 APPROACH SECTION B

STA. DW2 2+70.30 TO 3+05 +/–

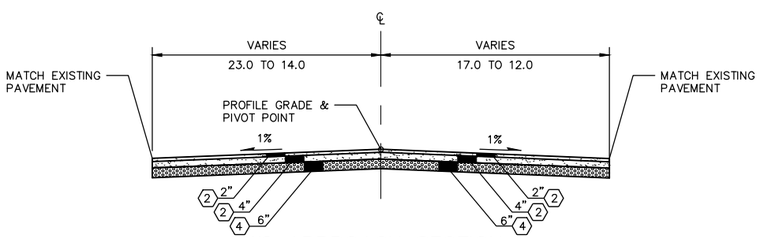

DW2 APPROACH SECTION C

STA. DW2 3+05 +/– TO 3+98 +/–

PAVING POINT TABLE				
POINT	STATION	OFFSET	ELEVATION	DESCRIPTION
A	A 19+94.61	195.82' R	156.93	AP
B	A 19+97.11	197.64' R	157.05	AP
C	A 20+22.10	197.01' R	156.69	AP
D	A 20+22.08	191.55' R	156.79	AP
E	A 20+31.86	191.47' R	157.17	AP
F	A 20+31.86	103.47' R	164.58	AP
G	A 20+23.86	103.47' R	164.17	AP
H	A 20+44.26	83.57' R	166.23	AP
J	A 20+44.34	91.56' R	166.44	AP
K	A 21+32.32	90.68' R	159.46	AP

PAVING POINT TABLE				
POINT	STATION	OFFSET	ELEVATION	DESCRIPTION
L	A 21+32.20	79.87' R	159.13	AP
M	A 21+40.39	79.91' R	158.83	PC
N	A 21+44.67	82.45' R	158.66	PT
P	A 21+52.73	96.72' R	158.14	AP
V	A 20+74.67	45.50' R	163.86	AP
W	A 20+64.34	63.39' R	164.60	PT
X	A 20+62.40	64.38' R	164.78	PCC
Y	A 20+44.55	44.50' R	169.46	PC
Z	A 20+44.55	43.50' R	169.62	
ZA	A 19+96.66	43.50' R	171.52	

PAVING POINT TABLE				
POINT	STATION	OFFSET	ELEVATION	DESCRIPTION
ZB	A 19+92.16	61.16' R	168.66	PRC
ZC	A 19+87.62	77.11' R	166.67	
ZD	A 19+84.78	77.37' R	166.72	AP

PAUL A. FERRIER STATE OF WASHINGTON 43172 REGISTERED PROFESSIONAL ENGINEER

NO.	DATE	BY	APPR.	REVISIONS

Approved By

TRANSPORTATION DESIGN MANAGER — DATE
M. ARAKELYAN
PROJECT MANAGER — DATE

S. HAYS
DESIGNED BY — DATE
J. FRYE
DRAWN BY — DATE
G. ROYCROFT
CHECKED BY — DATE

CITY OF BELLEVUE WASHINGTON

City of Bellevue
TRANSPORTATION DEPARTMENT

HDR

124th Ave NE - NE Spring Blvd to NE Ichigo Way

DRIVEWAY APPROACH PLAN & PROFILE

SHEET NAME DWP2

SHT 149 OF 198

SECTION 28, T. 25 N., R5E., W.M.
KING COUNTY

95% SUBMITTAL NOT FOR CONSTRUCTION

GENERAL NOTES:

1. UNLESS OTHERWISE NOTED, ALL DIMENSIONS ARE IN FEET AND INCHES.
2. SEE SHEET DWP0 FOR KEY PLAN AND LEGEND.
3. SAW CUT ASPHALT AND CONCRETE PAVEMENT AT JOINTS BETWEEN NEW AND EXISTING PAVEMENT.
4. SEE DWP4 FOR DW2–DW3 DRIVEWAY PROFILE.
5. SEE DWP6 FOR DW2–DW3 DRIVEWAY APPROACH SECTIONS.

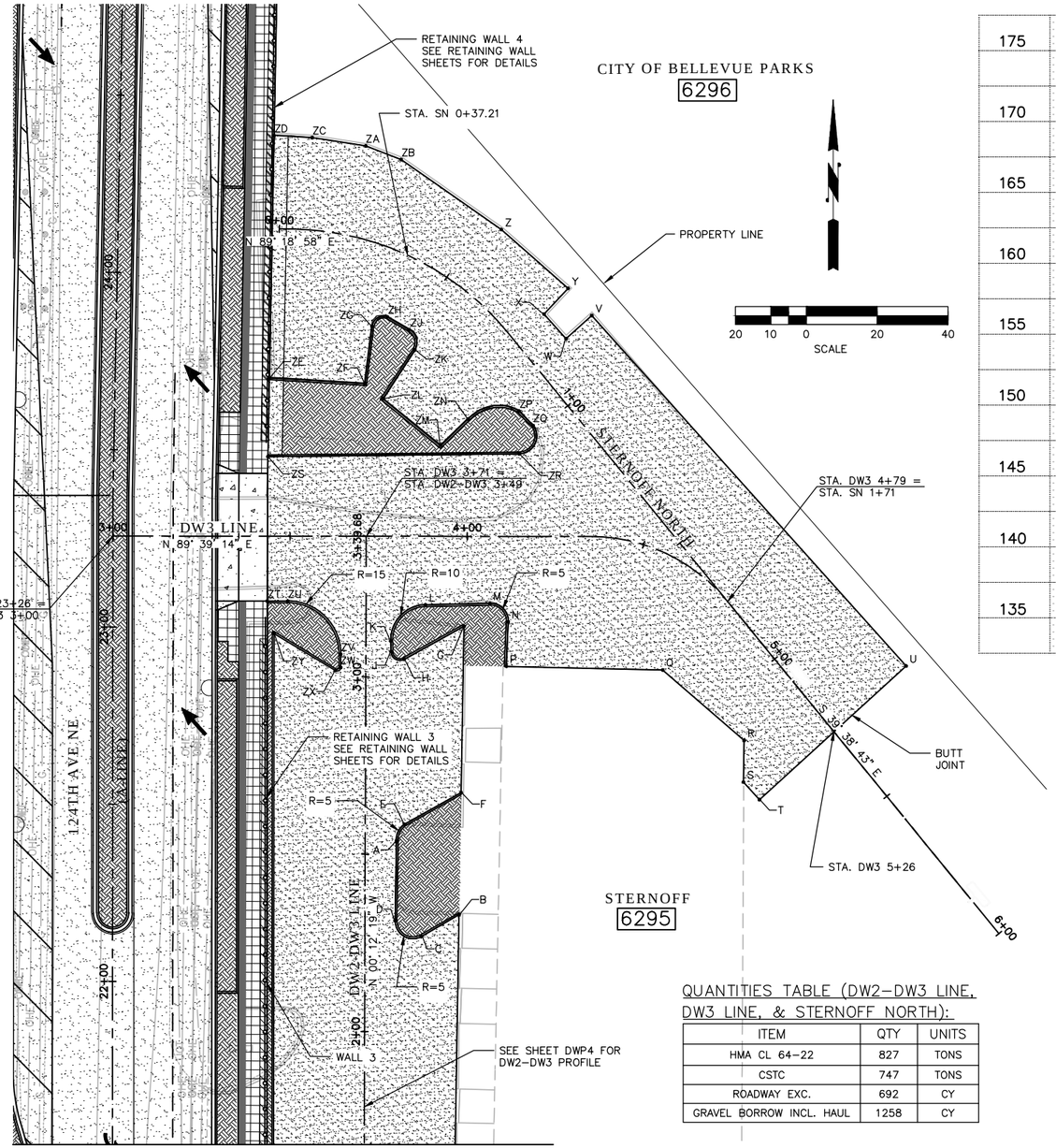

DW3 LINE PLAN

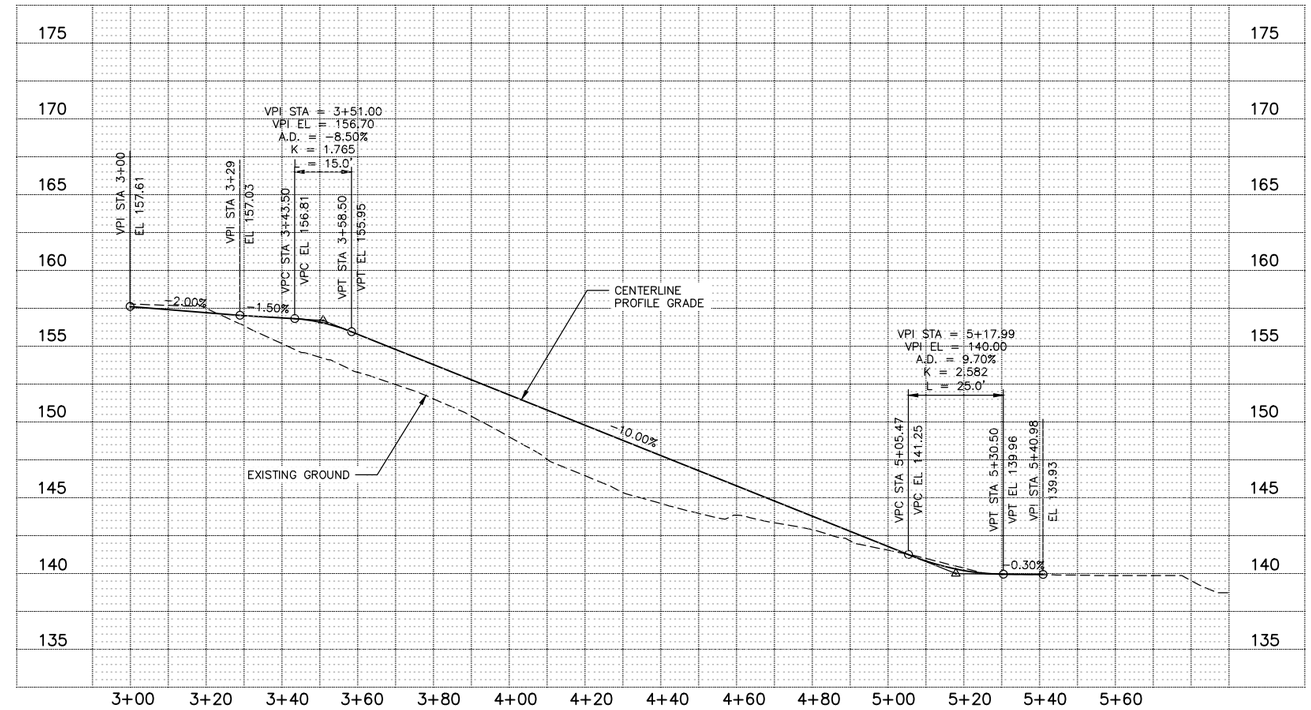

DW3 LINE PROFILE

QUANTITIES TABLE (DW2–DW3 LINE, DW3 LINE, & STERNOFF NORTH):

ITEM	QTY	UNITS
HMA CL 64–22	827	TONS
CSTC	747	TONS
ROADWAY EXC.	692	CY
GRAVEL BORROW INCL. HAUL	1258	CY

CURVE DATA

P.I.STATION	DELTA	RADIUS	TANGENT	LENGTH	S
DW3 4+34.79	50°42'03" RT	50.00'	23.69'	44.25'	–
STERNOFF NORTH 0+37.21	49°40'15" RT	80.00'	37.03'	69.35'	–

PAVING POINT TABLE

POINT	STATION	OFFSET	ELEVATION	DESCRIPTION
A	A 22+39.55	80.04' R	156.12	
B	A 22+18.91	97.78' R	156.26	
C	A 22+12.80	87.23' R	156.44	
D	A 22+17.20	79.73' R	156.55	
E	A 22+44.41	82.35' R	155.94	
F	A 22+53.35	98.32' R	155.48	
G	A 23+00.26	99.08' R	154.81	
H	A 22+90.93	82.20' R	155.14	
J	A 22+93.07	78.49' R	154.96	
K	A 22+96.13	78.44' R	154.69	
L	A 23+06.29	88.21' R	153.30	
M	A 23+06.71	106.40' R	151.37	
N	A 23+01.51	111.51' R	150.64	
P	A 22+88.98	111.01' R	150.25	
Q	A 22+87.98	155.14' R	144.79	
R	A 22+68.14	178.13' R	141.73	
S	A 22+56.37	177.95' R	141.56	
T	A 22+51.38	182.51' R	141.26	
U	A 22+89.16	223.84' R	140.82	
V	A 23+90.43	134.15' R	146.24	

PAVING POINT TABLE

POINT	STATION	OFFSET	ELEVATION	DESCRIPTION
W	A 23+83.77	127.00' R	146.06	
X	A 23+90.58	120.62' R	145.12	
Y	A 23+97.95	127.31' R	145.21	
Z	A 24+14.16	108.13' R	143.70	
ZA	A 24+37.01	69.42' R	0.00	
ZB	A 24+33.38	79.49' R	0.00	
ZC	A 24+39.05	54.29' R	0.00	
ZD	A 24+39.44	43.50' R	0.00	
ZE	A 23+71.09	43.50' R	0.00	
ZF	A 23+70.01	70.48' R	0.00	
ZG	A 23+86.19	72.19' R	0.00	
ZH	A 23+88.91	76.48' R	145.12	
ZJ	A 23+85.45	82.69' R	144.62	
ZK	A 23+79.73	84.37' R	144.79	
ZL	A 23+65.84	75.81' R	145.16	
ZM	A 23+53.05	92.13' R	147.65	
ZN	A 23+60.54	99.77' R	147.53	
ZP	A 23+63.09	114.10' R	147.32	
ZQ	A 23+59.04	118.13' R	148.03	
ZR	A 23+51.00	114.41' R	149.90	

PAVING POINT TABLE

POINT	STATION	OFFSET	ELEVATION	DESCRIPTION
ZS	A 23+48.85	43.50' R	156.54	
ZT	A 23+07.34	43.56' R	157.44	
ZU	A 23+07.34	49.32' R	157.21	
ZV	A 22+92.34	64.32' R	155.02	
ZW	A 22+88.61	64.32' R	155.26	
ZX	A 22+87.75	62.80' R	155.56	
ZY	A 22+98.15	45.52' R	155.78	

PAUL A. FERRER STATE OF WASHINGTON 43172 REGISTERED PROFESSIONAL ENGINEER

NO.	DATE	BY	APPR.	REVISIONS

Approved By

TRANSPORTATION DESIGN MANAGER — DATE
M. ARAKELYAN
PROJECT MANAGER — DATE

S. HAYS — DESIGNED BY — DATE
J. FRYE — DRAWN BY — DATE
G. ROYCROFT — CHECKED BY — DATE

City of Bellevue
TRANSPORTATION DEPARTMENT

HDR

124th Ave NE - NE Spring Blvd to NE Ichigo Way

DRIVEWAY APPROACH PLAN & PROFILE

SHEET NAME DWP3

SHT 150 OF 198

GENERAL NOTES:

1. UNLESS OTHERWISE NOTED, ALL DIMENSIONS ARE IN FEET AND INCHES.
2. SEE SHEETS DWP3 & DWP4 FOR PLANS.
3. SAW CUT ASPHALT AND CONCRETE PAVEMENT AT JOINTS BETWEEN NEW AND EXISTING PAVEMENT.

95% SUBMITTAL NOT FOR CONSTRUCTION

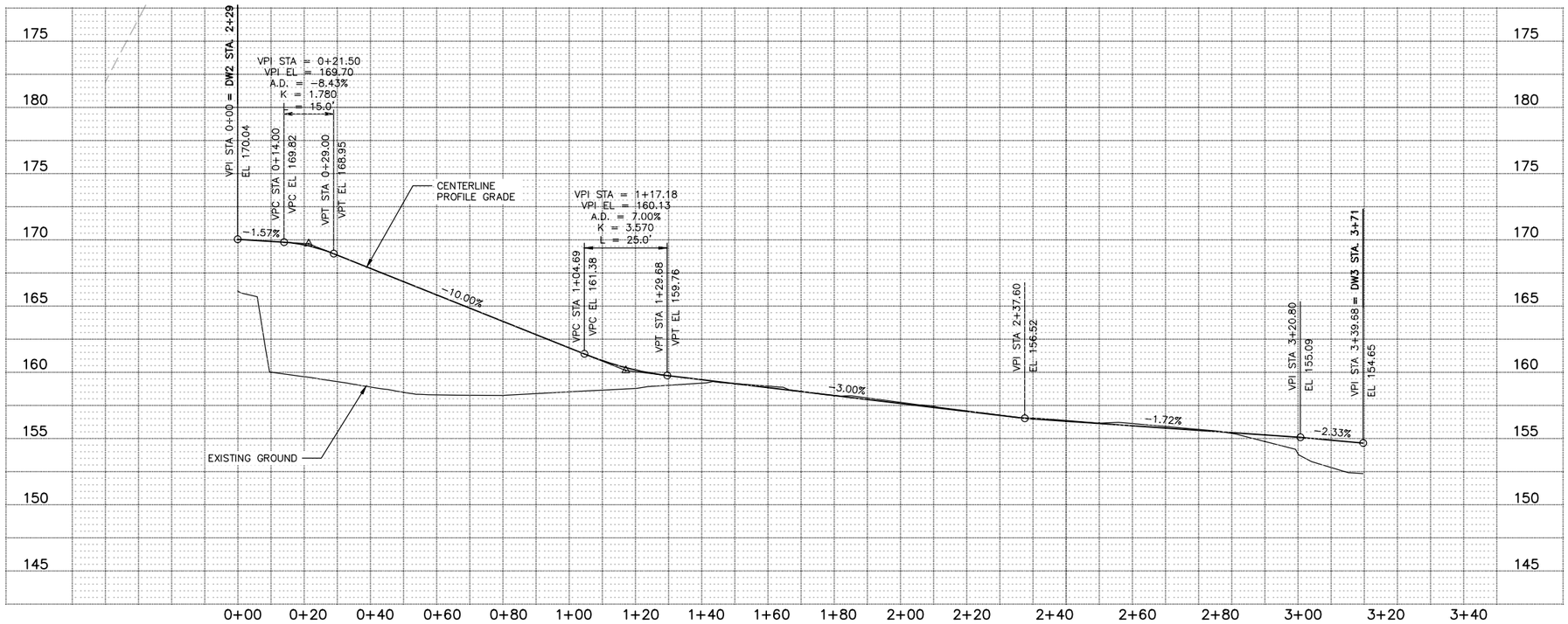

DW2–DW3 LINE PROFILE

NO.	DATE	BY	APPR.	REVISIONS

Approved By

TRANSPORTATION DESIGN MANAGER — DATE
M. ARAKELYAN
PROJECT MANAGER — DATE

S. HAYS — DESIGNED BY — DATE
J. FRYE — DRAWN BY — DATE
G. ROYCROFT — CHECKED BY — DATE

City of Bellevue
TRANSPORTATION DEPARTMENT

124th Ave NE - NE Spring Blvd to NE Ichigo Way

DRIVEWAY APPROACH PROFILE

SHEET NAME DWP4

SHT 151 OF 198

GENERAL NOTES:

1. UNLESS OTHERWISE NOTED, ALL DIMENSIONS ARE IN FEET AND INCHES.
2. SEE SHEETS DWP3 & DWP4 FOR PLANS.
3. SAW CUT ASPHALT AND CONCRETE PAVEMENT AT JOINTS BETWEEN NEW AND EXISTING PAVEMENT.

95% SUBMITTAL NOT FOR CONSTRUCTION

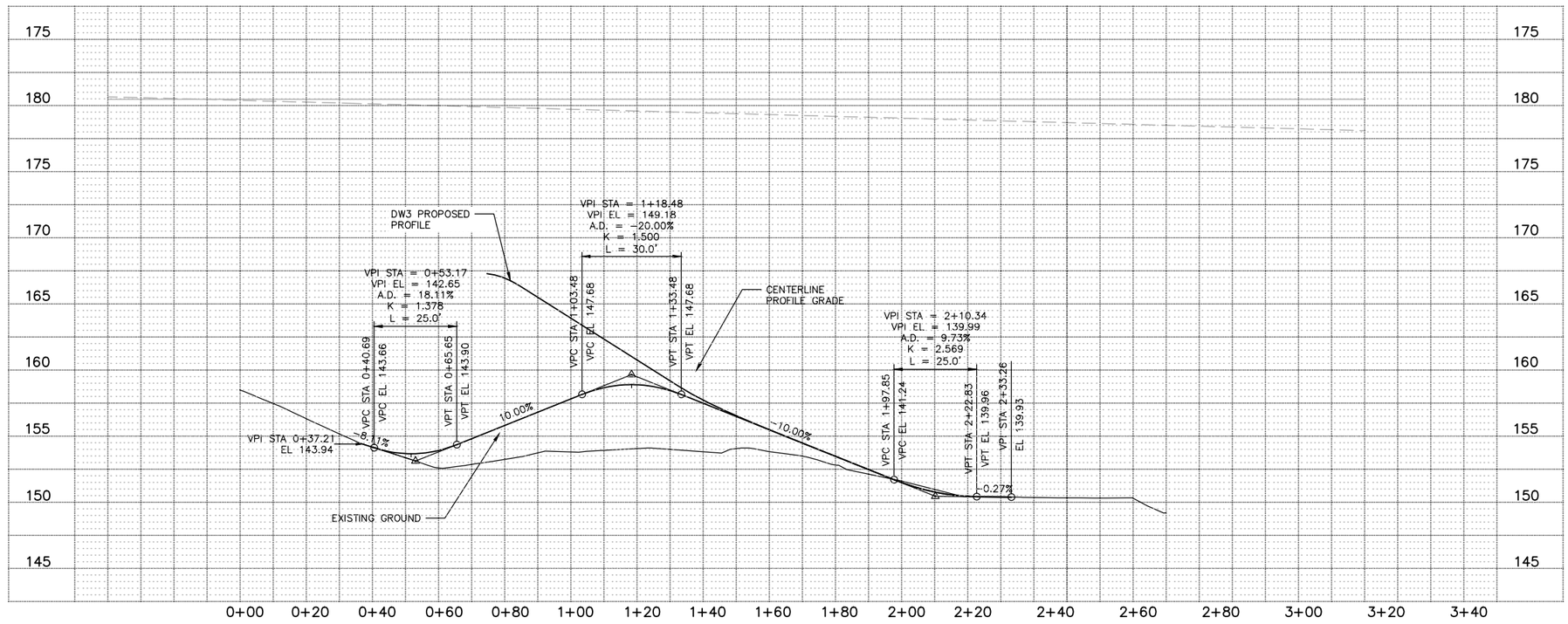

STERNOFF NORTH LINE PROFILE

NO.	DATE	BY	APPR.	REVISIONS

Approved By

TRANSPORTATION DESIGN MANAGER — DATE
M. ARAKELYAN
PROJECT MANAGER — DATE

S. HAYS — DESIGNED BY — DATE
J. FRYE — DRAWN BY — DATE
G. ROYCROFT — CHECKED BY — DATE

City of Bellevue
TRANSPORTATION DEPARTMENT

124th Ave NE - NE Spring Blvd to NE Ichigo Way

DRIVEWAY APPROACH PROFILE

SHEET NAME DWP5

SHT 152 OF 198

GENERAL NOTES:

1. UNLESS OTHERWISE NOTED, ALL DIMENSIONS ARE IN FEET AND INCHES.
2. SEE SHEET DWP0 FOR KEY PLAN AND LEGEND.
3. SAW CUT ASPHALT AND CONCRETE PAVEMENT AT JOINTS BETWEEN NEW AND EXISTING PAVEMENT.

SECTION 28, T. 25 N., R5E., W.M.
KING COUNTY

95% SUBMITTAL NOT FOR CONSTRUCTION

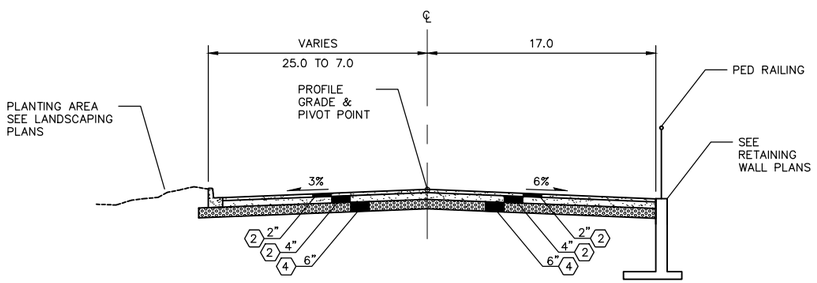

DW2–DW3 APPROACH SECTION A
STA. DW2–DW3 0+57 TO 0+76

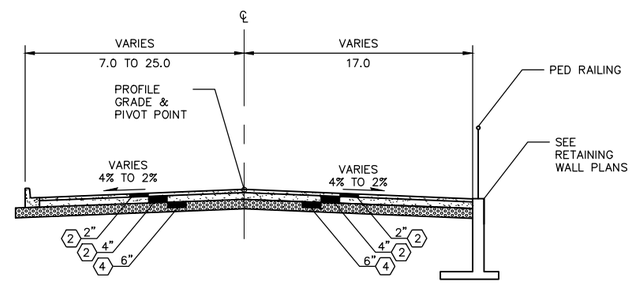

DW2–DW3 APPROACH SECTION B
STA. DW2–DW3 0+76 TO 0+87.3

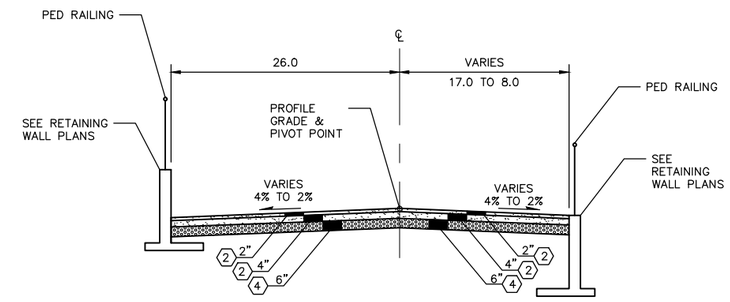

DW2–DW3 APPROACH SECTION C
STA. DW2–DW3 0+87.83 TO 1+38.50

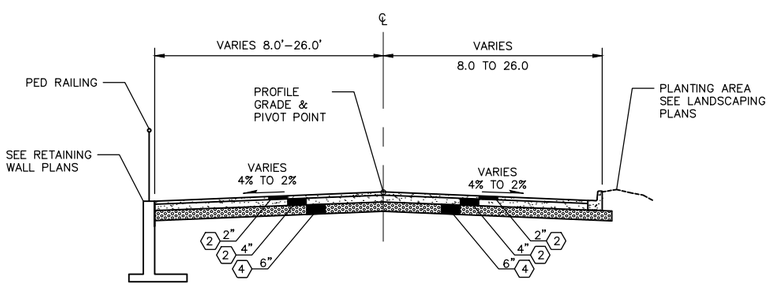

DW2–DW3 APPROACH SECTION D
STA. DW2–DW3 1+38.50 TO 3+20.85

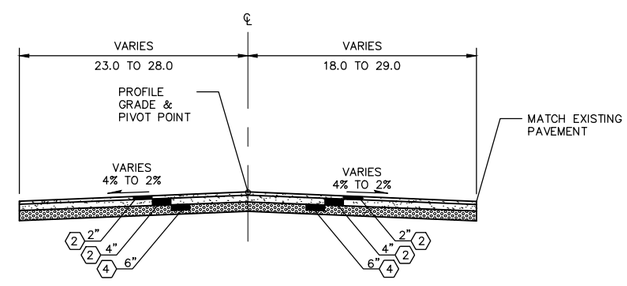

DW3 APPROACH SECTION A
STA. DW3 3+43.62 TO 4+31.22

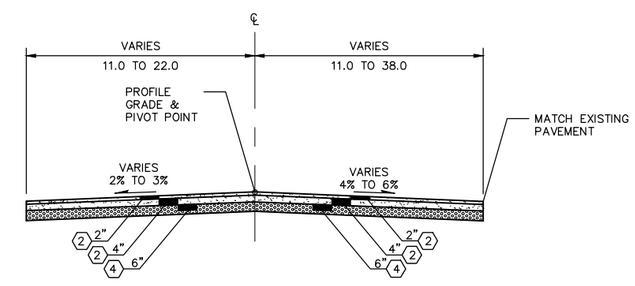

STERNOFF NORTH APPROACH SECTION A
STA. STERNOFF NORTH 0+37.21 TO 1+02.80

NO.	DATE	BY	APPR.	REVISIONS

Approved By

TRANSPORTATION DESIGN MANAGER — DATE
M. ARAKELYAN
PROJECT MANAGER — DATE

S. HAYS
DESIGNED BY — DATE
J. FRYE
DRAWN BY — DATE
G. ROYCROFT
CHECKED BY — DATE

City of Bellevue
TRANSPORTATION DEPARTMENT

124th Ave NE - NE Spring Blvd to NE Ichigo Way

DRIVEWAY APPROACH
TYPICAL ROADWAY SECTIONS

SHEET NAME DWP6

SHT 153 OF 198

GENERAL NOTES:

1. UNLESS OTHERWISE NOTED, ALL DIMENSIONS ARE IN FEET AND INCHES.
2. SEE SHEET DWP0 FOR KEY PLAN AND LEGEND.
3. SAW CUT ASPHALT AND CONCRETE PAVEMENT AT JOINTS BETWEEN NEW AND EXISTING PAVEMENT.

SECTION 28, T. 25 N., R5E., W.M.
KING COUNTY

95% SUBMITTAL NOT FOR CONSTRUCTION

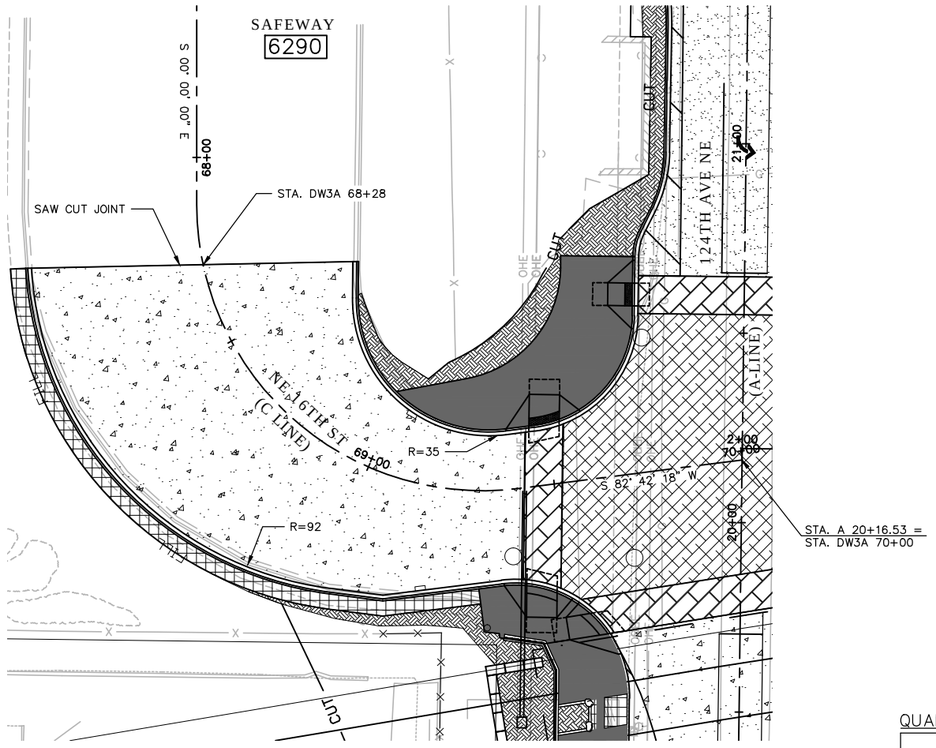

NE 16TH ST (DW3A LINE) PLAN

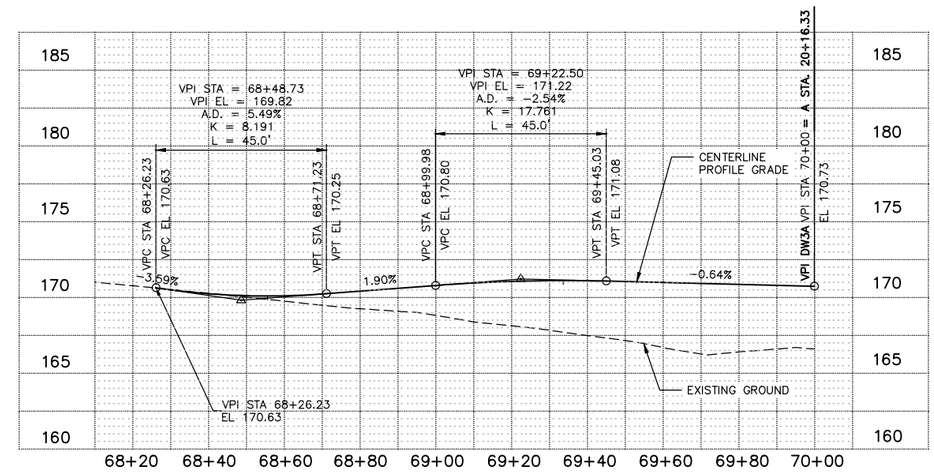

NE 16TH ST (DW3A LINE) PROFILE

QUANTITIES TABLE:

ITEM	QTY	UNITS
CONC.	1171	CY
CSTC	433	TONS
ROADWAY EXC.	300	CY
GRAVEL BORROW INCL. HAUL	390	CY

CURVE DATA					
P.I.STATION	DELTA	RADIUS	TANGENT	LENGTH	S
C 68+12.55	97°17'41" RT	75.42'	85.69'	128.07'	–

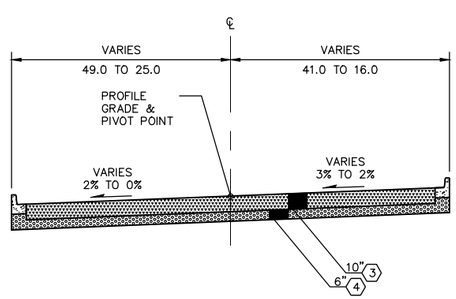

C–LINE APPROACH SECTION A

STA. C–LINE 68+28.41 TO 69+42.00

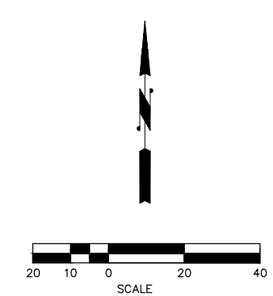

NO.	DATE	BY	APPR.	REVISIONS

Approved By

TRANSPORTATION DESIGN MANAGER — DATE
M. ARAKELYAN
PROJECT MANAGER — DATE

S. HAYS — DESIGNED BY — DATE
J. FRYE — DRAWN BY — DATE
G. ROYCROFT — CHECKED BY — DATE

City of Bellevue
TRANSPORTATION DEPARTMENT

HDR

124th Ave NE - NE Spring Blvd to NE Ichigo Way

DRIVEWAY APPROACH PLAN & PROFILE

SHEET NAME DWP7

SHT 154 OF 198

SECTION 28, T. 25 N., R5E., W.M.
KING COUNTY

95% SUBMITTAL NOT FOR CONSTRUCTION

GENERAL NOTES:

1. ALL DIMENSIONS ARE IN FEET UNLESS OTHERWISE NOTED.
2. ALL SIGNS AND SPACING SHALL CONFORM TO THE MANUAL ON UNIFORM TRAFFIC CONTROL DEVICES (MUTCD).
3. ALL PROPOSED CONDUIT SHALL BE SCHEDULE 40 PVC UNLESS NOTED OTHERWISE.
4. ALL SIGNS INSTALLED SHALL BE 7 FEET FROM THE FINISHED GRADE TO THE BOTTOM OF THE SIGN EXCEPT AS NOTED IN THE SIGN SCHEDULE.
5. FOR SIGN INSTALLATION DETAILS, SEE COB STD. DRAWINGS TE-21A AND TE-21C.
6. ALL REMOVED SIGNS SHALL REMAIN THE PROPERTY OF THE CITY OF BELLEVUE, UNLESS NOTED TO BE REMOVED BY OTHERS.
7. ALL PROPOSED CONDUITS SHALL BE SCHEDULE 40 PVC, UNLESS NOTED OTHERWISE.
8. LIGHT POLES, COBRA HEADS, AND BRACKET ARMS SHALL BE BLACK.

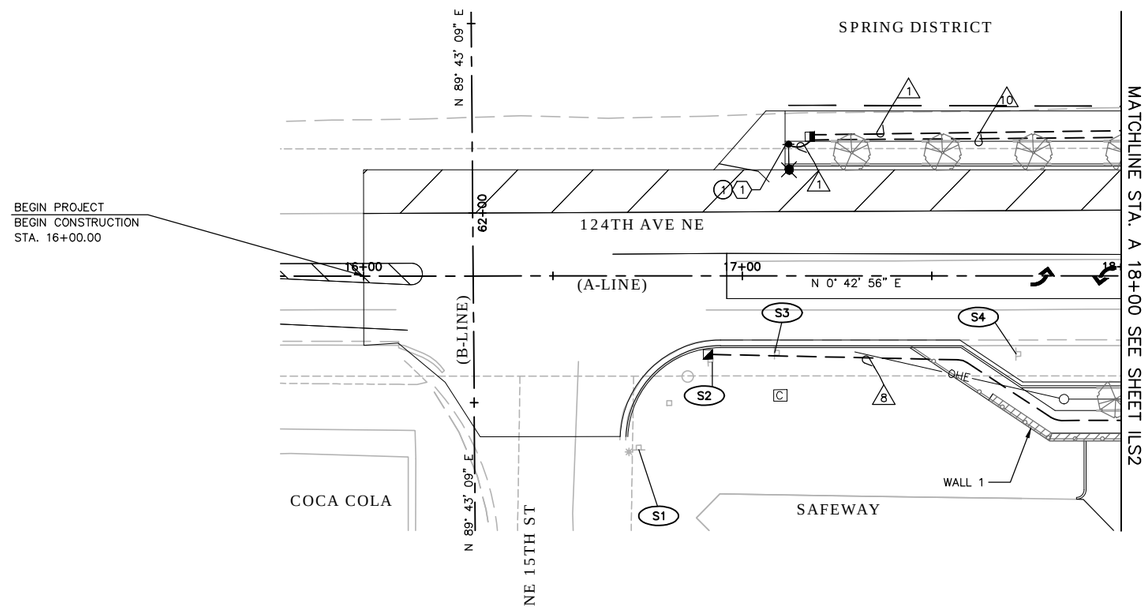

ILLUMINATION CONSTRUCTION NOTES:

(1) CONSTRUCT FOUNDATION AND INSTALL 30-FT ROADWAY LIGHT STANDARD WITH LED LUMINAIRE FIXTURE AT 30-FT MOUNTING HEIGHT. SEE SHEET ILD1 FOR DETAILS.

WIRING SCHEDULE

RUN # △	CONDUCTORS	CONDUIT SIZE (IN)
1	2#8 (ILL.), 2-#4 (REC.), 1#8 (GROUND)	2
8	SPARE	2
10	SPARE	3
	SPARE	2

LUMINAIRE SCHEDULE

COB POLE NO.*	LUM. NO. (#)	SERVICE CABINET #	LUMINAIRE CKT. NO.	RECEPTACLE CKT. NO.	STATION (OFFSET)	TYPE-DISTRIBUTION-WATT	POLE HEIGHT	POLE TYPE	ARM (FT)	COMMENTS
	1	1	IL1	R1	A-LINE 17+12.0, 34.5' LT	LEOTEK-60W-MV-NW-3-BK-350	30	CONC.	8	

SIGN SCHEDULE: (X)

SIGN NO.	STATION/OFFSET	NEW/EX	DESIGNATION	X	Y	COLOR	DESCRIPTION	REMARKS
S1	A 16+73 (RT)	EX	R1-1	30"	30"	RED	STOP	MAINTAIN AND PROTECT
S2	A 16+91 (RT)	EX	SPECIAL	36"	24"	BLUE	BELLEVUE FLEET OPERATIONS	MAINTAIN AND PROTECT
S3	A 17+08 (RT)	EX	R7-101 (MOD)	12"	18"	WHITE	NO PARKING NORTH OF HERE	MAINTAIN AND PROTECT
S4	A 17+72 (RT)	EX	R7-101	12"	18"	WHITE	NO PARKING ANY TIME	REMOVE SIGN AND STEEL POST

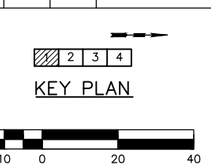

NO.	DATE	BY	APPR.	REVISIONS

Approved By

TRANSPORTATION DESIGN MANAGER — DATE
M. ARAKELYAN
PROJECT MANAGER — DATE

S. HAYS
DESIGNED BY — DATE
J. FRYE
DRAWN BY — DATE
G. ROYCROFT
CHECKED BY — DATE

City of Bellevue
TRANSPORTATION DEPARTMENT

HDR

124th Ave NE - NE Spring Blvd to NE Ichigo Way

ILLUMINATION AND SIGNING PLANS
BEGIN TO STA. A 18+00

SHEET NAME ILS1

SHT 155 OF 198

SECTION 28, T. 25 N., R5E., W.M.
KING COUNTY

95% SUBMITTAL NOT FOR CONSTRUCTION

LUMINAIRE SCHEDULE

COB POLE NO.*	LUM. NO. (#)	LUMINAIRE CKT. NO.	RECEPTACLE CKT. NO.	STATION (OFFSET)	TYPE–DISTRIBUTION–WATTAGE	POLE HEIGHT	POLE TYPE	ARM (FT)	COMMENTS
	2	IL1	R1	A–LINE 18+15.0, 34.5' LT	LEOTEK GC1–60F–MV–NW–3–BK–350	30	CONC.	8	
	3	IL1	R1	A–LINE 18+30.5, 35.5' RT	LEOTEK GC1–60F–MV–NW–3–BK–350	30	CONC.	8	
	4	IL1	–	SEE SHEET TS3	LEOTEK GC2–80F–MV–NW–3–BK–350	SEE TS3	SEE TS3	8	
	5	IL1	–	SEE SHEET TS3	LEOTEK GC1–80F–MV–NW–3–BK–350	SEE TS3	SEE TS3	8	
	6	IL1	–	SEE SHEET TS3	LEOTEK GC1–80F–MV–NW–3–BK–350	SEE TS3	SEE TS3	8	
	7	IL2	R2	A–LINE 20+89.0, 27.5'LT	LEOTEK GC1–60F–MV–NW–3–BK–350	30	CONC.	8	
	8	IL2	R2	A–LINE 22+00.0, 34.0'RT	LEOTEK GC1–60F–MV–NW–3–BK–350	30	CONC.	8	

SIGN SCHEDULE: (X)

SIGN NO.	STATION/OFFSET	NEW/EX	DESIGNATION	SIGN SIZE X	SIGN SIZE Y	COLOR	DESCRIPTION	REMARKS
S5	A 18+24 (RT)	EX	R7-101	12"	18"	WHITE	NO PARKING ANY TIME	REMOVE SIGN AND STEEL POST
S6	A 18+26 (LT)	EX	R7-101 (MOD)	12"	18"	WHITE	NO PARKING NORTH OF HERE	REMOVE SIGN AND STEEL POST
S7	A 18+15 (LT)	NEW	R7-101	12"	18"	WHITE	NO PARKING ANY TIME	INSTALL NEW SIGN ON LUMINAIRE
S8	A 21+77 (RT)	NEW	R2-1	30"	36"	WHITE	SPEED LIMIT 30	INSTALL NEW SIGN ON NEW STEEL POST
S9	A 18+89 (RT)	EX	R7-101	12"	18"	WHITE	NO PARKING ANY TIME	REMOVE SIGN AND STEEL POST
S10	A 19+04 (LT)	EX	R7-101	12"	18"	WHITE	NO PARKING ANY TIME	REMOVE SIGN AND STEEL POST
S11	A 19+73 (LT)	EX	R1-1	30"	30"	RED	STOP	REMOVE SIGN AND WOOD POST
S12	A 19+75 (RT)	EX	R7-101	12"	18"	WHITE	NO PARKING ANY TIME	REMOVE SIGN AND STEEL POST
S13	SEE TS3	NEW	SPECIAL	84"	18"	GREEN	NE 16TH ST	INSTALL NEW SIGN ON MAST ARM (SEE TS SHEETS)
S14	SEE TS3	NEW	SPECIAL	86"	18"	GREEN	124TH AVE NE	INSTALL NEW SIGN ON MAST ARM (SEE TS SHEETS)
S15	SEE TS3	NEW	SPECIAL	86"	18"	GREEN	124th AVE NE	INSTALL NEW SIGN ON MAST ARM (SEE TS SHEETS)
S16	SEE TS3	NEW	SPECIAL	84"	18"	GREEN	NE 16TH ST	INSTALL NEW SIGN ON MAST ARM (SEE TS SHEETS)
S17	A 21+00 (RT)	EX	R7-101	12"	18"	WHITE	NO PARKING ANY TIME	REMOVE SIGN AND STEEL POST
S18	A 21+41 (RT)	EX	R2-1	18"	24"	WHITE	SPEED LIMIT 5	REMOVE SIGN AND WOOD POST
S19	A 21+72 (LT)	NEW	R7-101	12"	18"	WHITE	NO PARKING ANY TIME	REMOVE BY OTHERS
S20	A 21+81 (RT)	EX	SPECIAL	48"	48"	WHITE	124TH PLAZA - BUSINESS SIGN	RELOCATE SIGN TO STA A 20+48, 50' RT

GENERAL NOTES:

1. ALL DIMENSIONS ARE IN FEET UNLESS OTHERWISE NOTED.
2. ALL SIGNS AND SPACING SHALL CONFORM TO THE MANUAL ON UNIFORM TRAFFIC CONTROL DEVICES (MUTCD),
3. ALL PROPOSED CONDUIT SHALL BE SCHEDULE 40 PVC UNLESS NOTED OTHERWISE.
4. SEE SHEET TS1 FOR INSTALLATION OF SERVICE PEDESTAL.
5. ALL SIGNS INSTALLED SHALL BE 7 FEET FROM THE FINISHED GRADE TO THE BOTTOM OF THE SIGN EXCEPT AS NOTED IN THE SIGN SCHEDULE.
6. FOR SIGN INSTALLATION DETAILS, SEE CITY OF BELLEVUE STANDARD DRAWINGS TE–21A AND TE–21C.
7. ALL REMOVED SIGNS SHALL REMAIN THE PROPERTY OF THE CITY OF BELLEVUE, UNLESS NOTED TO BE REMOVED BY OTHERS.
8. ALL PROPOSED CONDUITS SHALL BE SCHEDULE 40 PVC, UNLESS NOTED OTHERWISE.
9. LIGHT POLES, COBRA HEADS, AND BRACKET ARMS SHALL BE BLACK.

ILLUMINATION CONSTRUCTION NOTES:

1. CONSTRUCT FOUNDATION. PROVIDE AND INSTALL 30–FT ROADWAY LIGHT STANDARD WITH LED LUMINAIRE AT 30–FT MOUNTING HEIGHT.
2. ROUTE CONDUCTORS TO IRRIGATION CONTROLLER. SEE IRRIGATION PLANS FOR FURTHER DETAILS.
3. SEE SHEET TS1 FOR ADDITIONAL CONDUIT AND CONDUCTORS AT THE INTERSECTION.

WIRING SCHEDULE

RUN # (△)	CONDUCTORS	CONDUIT SIZE (IN)
1	2#8 (ILL.), 2#4(REC.), 1#8 (GROUND)	2
2	6PR (INTC.), 12–STRAND SMFO (ITS) CABLE	3
	SPARE	3
	SPARE	2
3	2#8 (ILL.), 2#4 (REC.), 2#8 (IRR.), 1#8 (GROUND)	2
	SPARE	3
	SPARE	2
4	2#8 (ILL.), 2#4 (REC.), 2#8 (IRR.), 1#8 (GROUND)	2"RGS
	SPARE	3"RGS
5	2#8 (IRR.), 1#8 (GROUND)	2
6	2#8 (ILL.), 2#4 (REC.), 1#8 (GROUND)	2"RGS
	SPARE	2"RGS
7	2#8 (ILL.), 2#4 (REC.), 1#8 (GROUND)	2
	SPARE	2
8	SPARE	2
10	SPARE	3
	SPARE	2
11	2#8 (ILL.), 1#8 (GROUND)	2

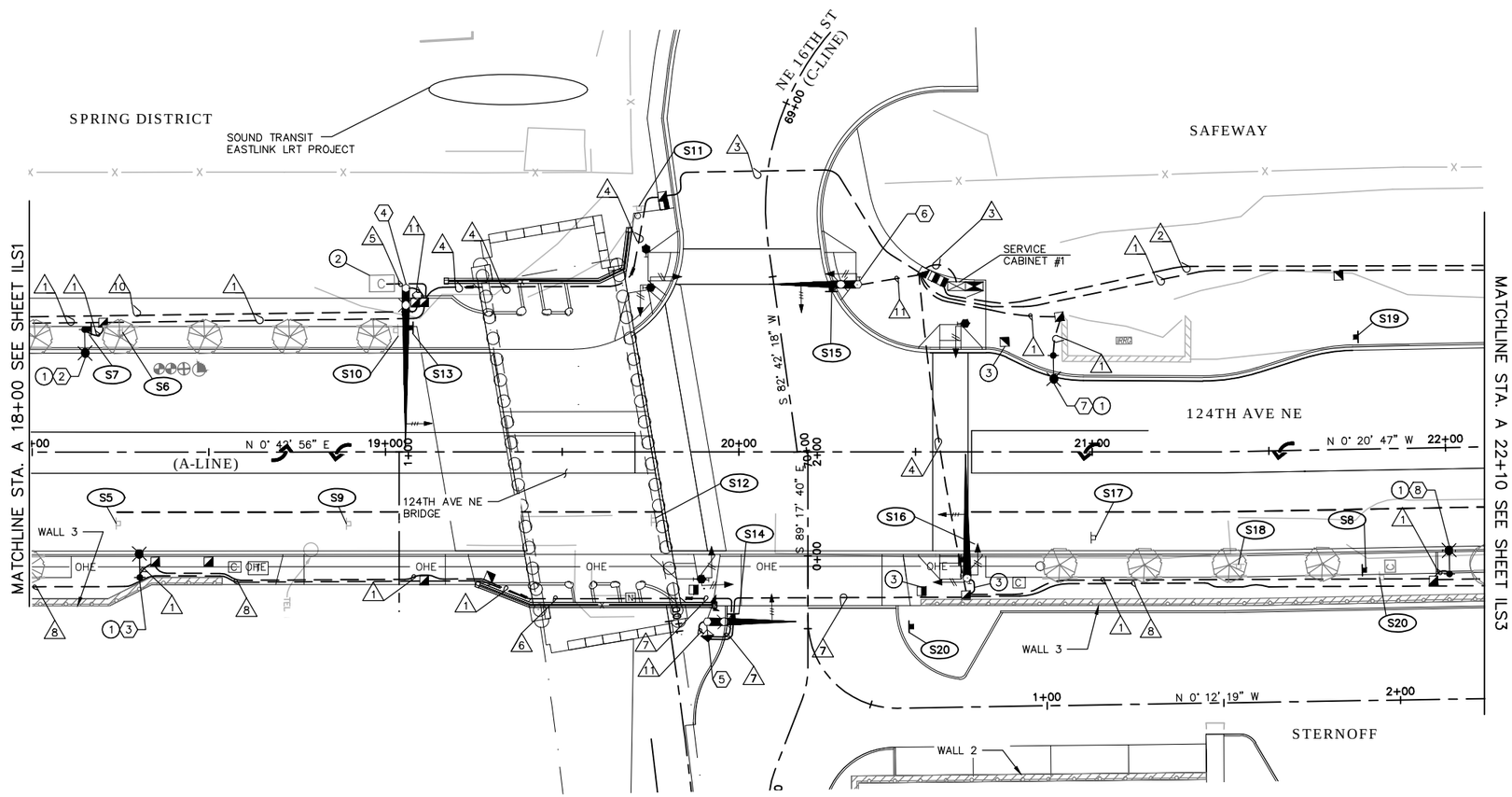

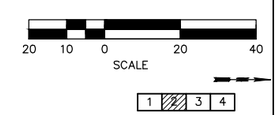

NO.	DATE	BY	APPR.	REVISIONS

Approved By

TRANSPORTATION DESIGN MANAGER — DATE
M. ARAKELYAN
PROJECT MANAGER — DATE

S. HAYS — DESIGNED BY — DATE
J. FRYE — DRAWN BY — DATE
G. ROYCROFT — CHECKED BY — DATE

City of Bellevue
TRANSPORTATION DEPARTMENT

HDR

124th Ave NE - NE Spring Blvd to NE Ichigo Way

ILLUMINATION AND SIGNING PLANS
STA. A 18+00 TO STA. A 22+00

SHEET NAME **ILS2**

SHT 156 OF 198

SECTION 28, T. 25 N., R5E., W.M.
KING COUNTY

95% SUBMITTAL NOT FOR CONSTRUCTION

GENERAL NOTES:

1. ALL DIMENSIONS ARE IN FEET UNLESS OTHERWISE NOTED.
2. ALL SIGNS AND SPACING SHALL CONFORM TO THE MANUAL ON UNIFORM TRAFFIC CONTROL DEVICES (MUTCD),
3. ALL PROPOSED CONDUIT SHALL BE SCHEDULE 40 PVC UNLESS NOTED OTHERWISE.
4.
5. ALL SIGNS INSTALLED SHALL BE 7 FEET FROM THE FINISHED GRADE TO THE BOTTOM OF THE SIGN EXCEPT AS NOTED IN THE SIGN SCHEDULE.
6. FOR SIGN INSTALLATION DETAILS, SEE CITY OF BELLEVUE STANDARD DRAWINGS TE-21A AND TE-21C.
7. ALL REMOVED SIGNS SHALL REMAIN THE PROPERTY OF THE CITY OF BELLEVUE, UNLESS NOTED TO BE REMOVED BY OTHERS.
8. ALL PROPOSED CONDUITS SHALL BE SCHEDULE 40 PVC, UNLESS NOTED OTHERWISE.
9. LIGHT POLES, COBRA HEADS, AND BRACKET ARMS SHALL BE BLACK.

ILLUMINATION CONSTRUCTION NOTES:

(1) CONSTRUCT FOUNDATION AND INSTALL 30-FT ROADWAY LIGHT STANDARD WITH LED LUMINAIRE FIXTURE AT 30-FT MOUNTING HEIGHT. SEE SHEET ILD1 FOR DETAILS.

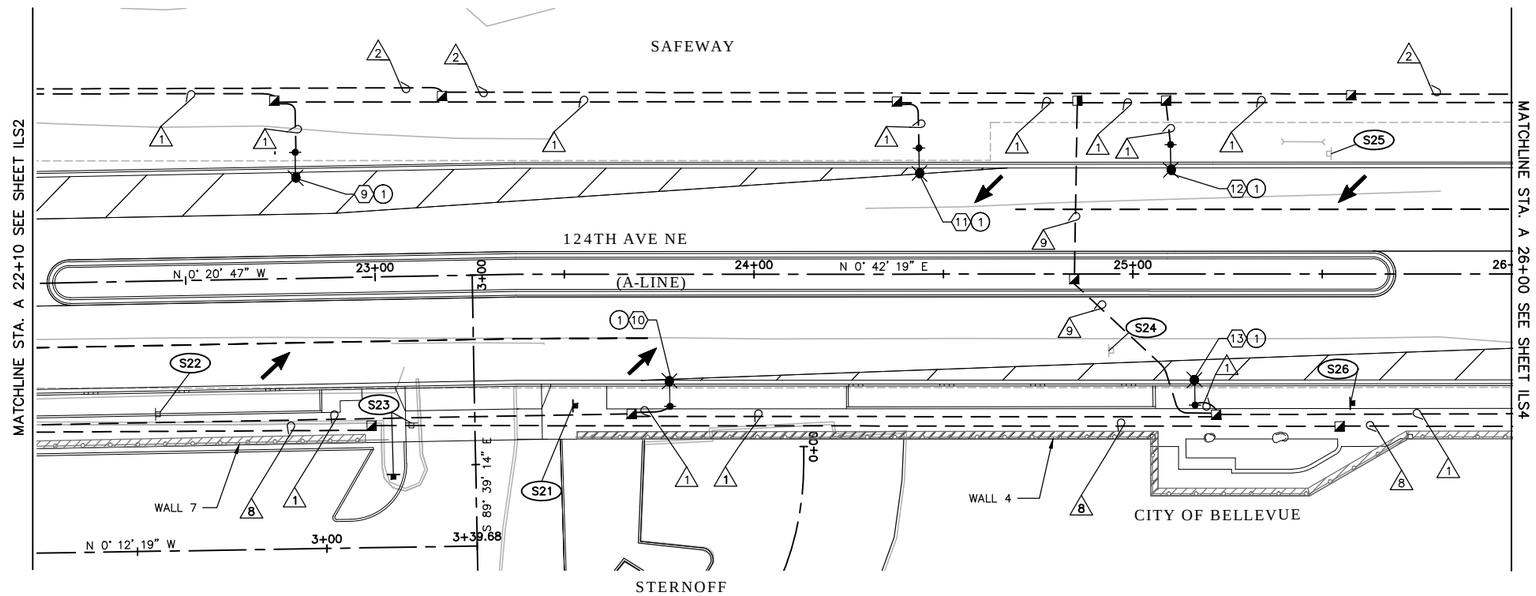

WIRING SCHEDULE

RUN #	CONDUCTORS	CONDUIT SIZE (IN)
1	2#8 (ILLUM.), 2#4 (REC.), 1#8 (GROUND)	2
2	6PR (INTC.), 12-STRAND SMFO (ITS) CABLE	3
	SPARE	3
	SPARE	2
8	SPARE	2
9	SPARE	3
	SPARE	3

SIGN SCHEDULE: (X)

SIGN NO.	STATION/OFFSET	NEW/EX	DESIGNATION	X	Y	COLOR	DESCRIPTION	REMARKS
S21	A 22+52 (RT)	NEW	R7-101	12"	18"	WHITE	NO PARKING ANY TIME	INSTALL NEW SIGN ON NEW STEEL POST
S22	A 22+41 (RT)	EX	SPECIAL	72"	60"	WHITE	COLLIER'S INTERNATIONAL - FOR LEASE	REMOVE SIGN AND 3 WOOD POSTS
S23	A 23+09 (RT)	EX	R2-1	18"	24"	WHITE	SPEED LIMIT 5	REMOVE AND RELOCATE SIGN AND WOOD POST
S24	A 24+94 (RT)	EX	R2-1	30"	36"	WHITE	SPEED LIMIT 30	REMOVE SIGN AND STEEL POST
S25	A 25+53 (LT)	EX	R7-101 (MOD)	12"	18"	WHITE	NO PARKING NORTH OF HERE	REMOVE SIGN AND STEEL POST
S26	A 25+57 (RT)	NEW	R2-1	30"	30"	WHITE	SPEED LIMIT 30	INSTALL NEW SIGN ON NEW STEEL POST

LUMINAIRE SCHEDULE

COB POLE NO.*	LUM. NO. (#)	LIGHT CKT. NO.	RECEPTACLE CKT. NO.	STATION (OFFSET)	TYPE-DISTRIBUTION-WATT	POLE HEIGHT	POLE TYPE	ARM (FT)	COMMENTS
	9	IL2	R2	A-LINE 22+79.5, 33.0' LT	LEOTEK GC1-60F-MV-NW-3-BK-350	30	CONC.	8	
	10	IL2	R2	A-LINE 23+78.0, 34.5' RT	LEOTEK GC2-80F-MV-NW-3-BK-350	30	CONC.	8	
	11	IL2	R2	A-LINE 24+43.5, 33.0' LT	LEOTEK GC1-60F-MV-NW-3-BK-350	30	CONC.	8	
	12	IL2	R2	A-LINE 25+10.0, 34.0' LT	LEOTEK GC1-80F-MV-NW-3-BK-350	30	CONC.	8	
	13	IL2	R2	A-LINE 25+16.5, 34.5' RT	LEOTEK GC1-80F-MV-NW-3-BK-350	30	CONC.	8	

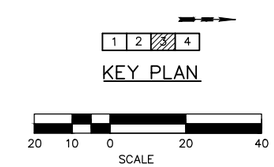

NO.	DATE	BY	APPR.	REVISIONS

Approved By

TRANSPORTATION DESIGN MANAGER — DATE
M. ARAKELYAN
PROJECT MANAGER — DATE

S. HAYS — DESIGNED BY — DATE
J. FRYE — DRAWN BY — DATE
G. ROYCROFT — CHECKED BY — DATE

City of Bellevue
TRANSPORTATION DEPARTMENT

HDR

124th Ave NE - NE Spring Blvd to NE Ichigo Way

ILLUMINATION AND SIGNING PLAN
STA. A 22+00 TO STA. A 26+00

SHEET NAME ILS3

SHT 157 OF 198

SECTION 28, T. 25 N., R5E., W.M.
KING COUNTY

95% SUBMITTAL NOT FOR CONSTRUCTION

GENERAL NOTES:

1. ALL DIMENSIONS ARE IN FEET UNLESS OTHERWISE NOTED.
2. ALL SIGNS AND SPACING SHALL CONFORM TO THE MANUAL ON UNIFORM TRAFFIC CONTROL DEVICES (MUTCD),
3. ALL PROPOSED CONDUIT SHALL BE SCHEDULE 40 PVC UNLESS NOTED OTHERWISE.
4. ALL SIGNS INSTALLED SHALL BE 7 FEET FROM THE FINISHED GRADE TO THE BOTTOM OF THE SIGN EXCEPT AS NOTED IN THE SIGN SCHEDULE.
5. FOR SIGN INSTALLATION DETAILS, SEE CITY OF BELLEVUE STANDARD DRAWINGS TE–21A AND TE–21C.
6. ALL REMOVED SIGNS SHALL REMAIN THE PROPERTY OF THE CITY OF BELLEVUE, UNLESS NOTED TO BE REMOVED BY OTHERS.
7. ALL PROPOSED CONDUITS SHALL BE SCHEDULE 40 PVC, UNLESS NOTED OTHERWISE.
8. LIGHT POLES, COBRA HEADS, AND BRACKET ARMS SHALL BE BLACK.

ILLUMINATION CONSTRUCTION NOTES:

(1) CONSTRUCT FOUNDATION AND INSTALL 30–FT ROADWAY LIGHT STANDARD WITH LED LUMINAIRE FIXTURE AT 30–FT MOUNTING HEIGHT. SEE SHEET ILD1 FOR DETAILS.

(2) COIL 100 FT OF 12–STRAND SMFO (ITS) AND 6 PR (INTC.) SLACK CABLE FOR FUTURE IN TYPE 2 JUNCTION BOX.

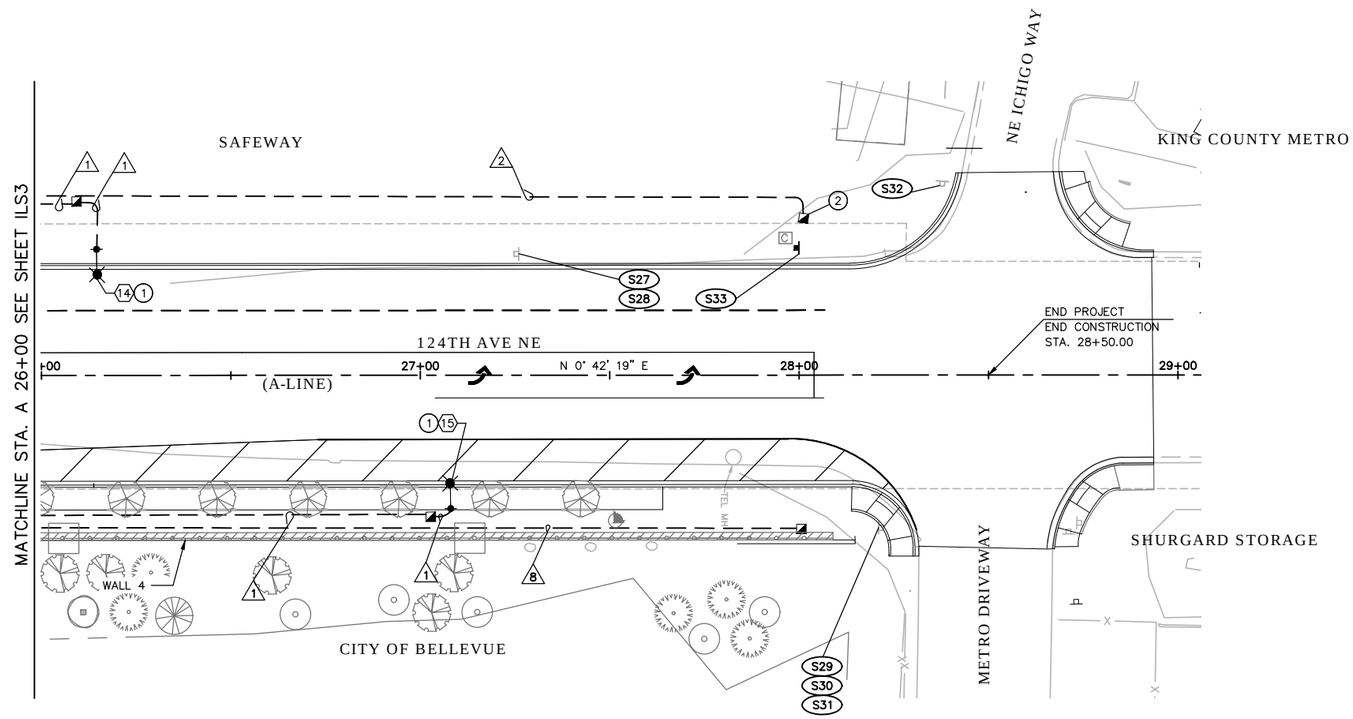

WIRING SCHEDULE

RUN #	CONDUCTORS	CONDUIT SIZE (IN)
1	2#8 (ILLUM.), 2#4 (REC.), 1#8 (GROUND)	2
2	6PR (INTC.), 12–STRAND SMFO (ITS) CABLE	3
	SPARE	3
	SPARE	2
8	SPARE	2

SIGN SCHEDULE: (X)

SIGN NO.	STATION/OFFSET	NEW/EX	DESIGNATION	X	Y	COLOR	DESCRIPTION	REMARKS
S27	A 27+26 (LT)	EX	R2–1	30"	36"	WHITE	SPEED LIMIT 30	REMOVE SIGN AND STEEL POST
S28	A 27+26 (LT)	EX	R7–101	12"	18"	WHITE	NO PARKING ANY TIME	REMOVE SIGN
S29	A 28+21 (RT)	EX	SPECIAL	36"	18"	WHITE	KING COUNTY – BELLEVUE BASE	MAINTAIN AND PROTECT
S30	A 28+21 (RT)	EX	SPECIAL	12"	18"	YELLOW	LEFT ARROW	MAINTAIN AND PROTECT
S31	A 28+21 (LT)	EX	SPECIAL	36"	18"	WHITE	PACIFIC TOPSOIL, INC.	MAINTAIN AND PROTECT
S32	A 28+38 (LT)	EX	R1–1	30"	30"	RED	STOP	MAINTAIN AND PROTECT
S33	A 28+00 (LT)	NEW	R2–1	30"	36"	WHITE	SPEED LIMIT 30	INSTALL NEW SIGN ON STEEL POST

LUMINAIRE SCHEDULE

COB POLE NO.*	LUM. NO. (#)	LIGHT CKT. NO.	RECEPTACLE CKT. NO.	STATION (OFFSET)	TYPE–DISTRIBUTION–WATT	POLE HEIGHT	POLE TYPE	ARM (FT)	COMMENTS
	14	IL2	R2	A–LINE 26+14.5, 33.5' LT	LEOTEK–GC1–60F–MV–NW–3 –BK–350	30	CONC.	8	
	15	IL2	R2	A–LINE 27+08.0, 35.0' RT	LEOTEK–GC1–60F–MV–NW–3 –BK–350	30	CONC.	8	

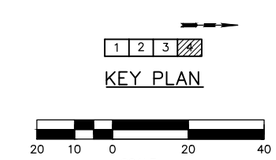

NO.	DATE	BY	APPR.	REVISIONS

Approved By

TRANSPORTATION DESIGN MANAGER — DATE
M. ARAKELYAN
PROJECT MANAGER — DATE

S. HAYS — DESIGNED BY — DATE
J. FRYE — DRAWN BY — DATE
G. ROYCROFT — CHECKED BY — DATE

City of Bellevue
TRANSPORTATION DEPARTMENT

HDR

124th Ave NE - NE Spring Blvd to NE Ichigo Way

ILLUMINATION AND SIGNING PLAN
STA. A 26+00 TO END

SHEET NAME **ILS4**

SHT 158 OF 198

GENERAL NOTES:

1. ALL DIMENSIONS ARE IN FEET UNLESS OTHERWISE NOTED.
2. SEE SHEETS ILS1–ILS4 FOR SIGN, WIRING, AND POLE SCHEDULES.

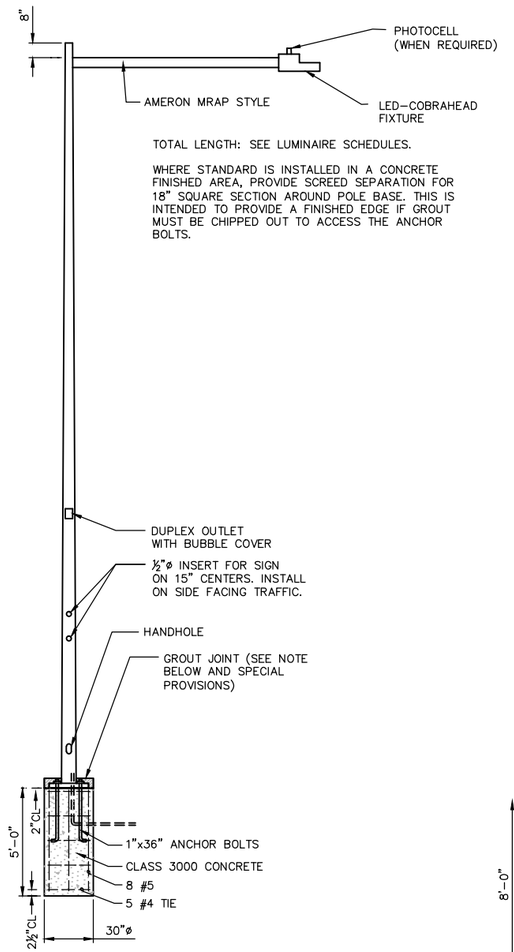

NOTE:
WHEN FOUNDATION IS IN SIDEWALK AREA TOP 6" SHALL CONSIST OF 4" SAND UNDER 2" GROUT. WHEN FOUNDATION IS IN PLANTING STRIP TOP 6" SHALL BE TOPSOIL.

CONCRETE LUMINAIRE POLE DETAIL (A –)
N.T.S.

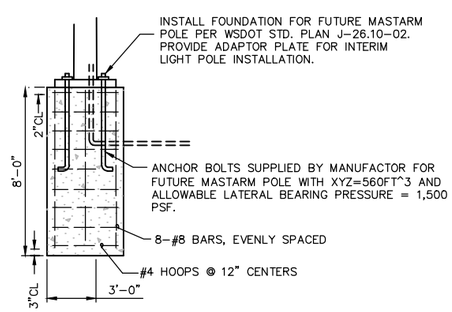

SPECIAL POLE FOUNDATION DETAIL (B –)
N.T.S.

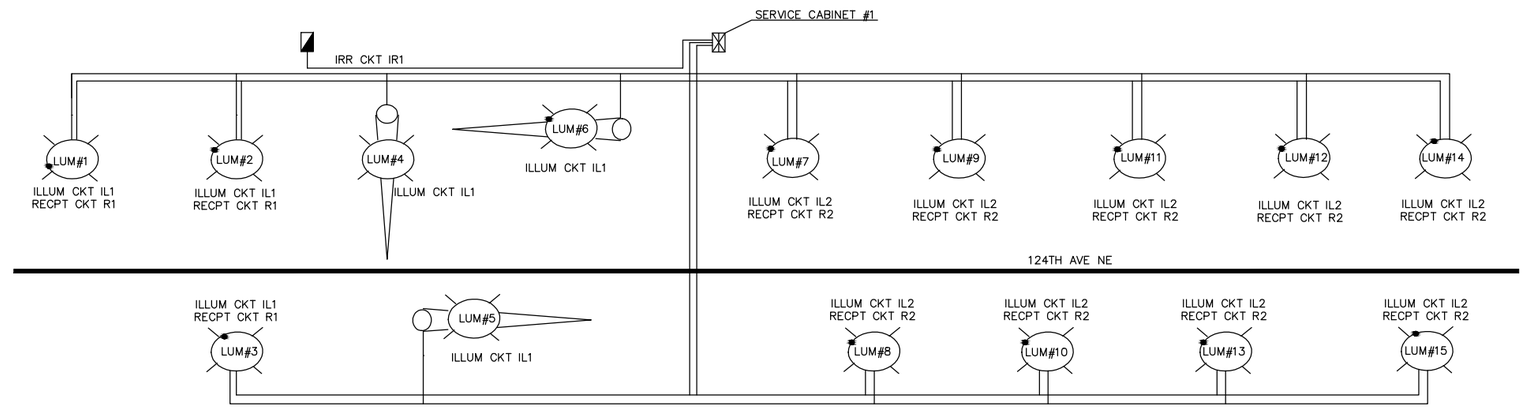

SERVICE CABINET SHALL CONFORM TO CITY OF BELLEVUE DWG. NO. TSSL–21 EXCEPT FOR THE FOLLOWING REQUIREMENTS:
ELECTRICAL SERVICE CABINET SHALL BE SUPPLIED WITH:

- 2–15 AMP 240V ILLUMINATION BRANCH BREAKERS (CKT. IL1, IL2)
- 2–20 AMP RECEPTABLE BRANCH BREAKERS (CKT. R1, R2)
- 1–15 AMP IRRIGATION CONTROL BREAKER (CKT. IR1)

CIRCUIT DIAGRAM
SCALE: NTS

LEGEND:

- SERVICE CABINET
- IRRIGATION CONTROL
- LUM# / ILLUM CKT # / RECPT CKT # — ROADWAY STREET LUMINAIRE WITH FESTOON

NO.	DATE	BY	APPR.	REVISIONS

Approved By
TRANSPORTATION DESIGN MANAGER — DATE
M. ARAKELYAN
PROJECT MANAGER — DATE

S. HAYS — DESIGNED BY — DATE
J. FRYE — DRAWN BY — DATE
G. ROYCROFT — CHECKED BY — DATE

City of Bellevue
TRANSPORTATION DEPARTMENT

HDR

124th Ave NE - NE Spring Blvd to NE Ichigo Way

LIGHTING DETAIL

SHEET NAME ILD1

SECTION 28, T. 25 N., R5E., W.M.
KING COUNTY

95% SUBMITTAL NOT FOR CONSTRUCTION

GENERAL NOTES:

1. SEE SHEET LG1 AND LG2 FOR LEGEND AND ABBREVIATIONS.
2. SEE SHEET ILS1–ILS4 FOR ILLUMINATION, ITS, SIGNING PLANS AND ILD1 FOR DETAILS.
3. ALL WORK SHALL BE PERFORMED IN ACCORDANCE WITH WSDOT STANDARD PLANS AND SPECIFICATIONS, AS AMENDED BY CITY OF BELLEVUE STANDARD, EXCEPT AS MODIFIED BY CONTRACT PLANS AND PROVISIONS.
4. UTILITY LOCATIONS ARE APPROXIMATE AND SHALL BE VERIFIED IN THE FIELD BY THE CONTRACTOR PRIOR TO ANY SIGNAL WORK. CONFLICTS SHALL BE IMMEDIATELY BROUGHT TO THE ATTENTION OF THE ENGINEER FOR RESOLUTION.
5. ALL PROPOSED CONDUIT SHALL BE SCHEDULE 40 PVC UNLESS NOTED OTHERWISE.
6. COORDINATE WITH PSE FOR POWER HOOK–UP TO CABINETS.
7. ALL POLES, TERMINAL CABINETS, SIGNAL HEADS, PEDESTRIAN SIGNAL HEADS, LUMINAIRES, MOUNTINGS, AND BRACKET ARMS SHALL BE POWDER COATED BLACK.
8. CALL UTILITIES UNDERGROUND LOCATION CENTER AT 1–800–424–5555 48 HOURS PRIOR TO CONSTRUCTION.
9. ALL POLE PENETRATIONS SHALL BE MADE IN THE FIELD.
10. OPTICOM SENSORS SHALL BE MOUNTED HIGHER THAN STREET NAME SIGNS.
11. POLE LOCATIONS SHALL BE STAKED IN THE FIELD BY THE ENGINEER PRIOR TO CONSTRUCTION.
12. THE LOCATIONS OF CONDUITS AND JUNCTION BOXES SHOWN IN THE PLANS ARE FOR GRAPHIC REPRESENTATION ONLY. EXACT LOCATIONS WILL BE DETERMINED IN THE FIELD.
13. ALL SIGNAL POLES SHALL BE INSTALLED A MINIMUM OF 3FT FROM THE FACE OF CURB.
14. TUNNEL VISORS AND BACKPLATES SHALL BE USED FOR ALL VEHICLE HEADS.
15. ALL POLES, TERMINAL CABINETS, VIDEO TERMINAL CABINETS, SIGNAL HEADS, PEDESTRIAN HEADS, CAMERAS, LUMINAIRE, AND MOUNTINGS SHALL BE POWDER COATED BLACK.

(X) CONSTRUCTION NOTES

1. CONSTRUCT FOUNDATION PER COB STANDARD PLAN TSSL–20. INSTALL CITY–PROVIDED TYPE P CONTROLLER CABINET. PROVIDE AND INSTALL AND SERVICE CABINET PER COB STANDARD PLAN TSSL–21.
2. INSTALL PREFORMED 6–FT LOOP PER WSDOT STANDARD PLAN J–50.16.01. SEE BRIDGE PLANS FOR DETAILS.
3. INSTALL 6–FT LOOP PER COB STANDARD PLANS TSSL–10 AND TSSL–11.
4. SEE SHEET ILS2 FOR LUMINAIRE, CONDUCTOR, AND WIRING DETAILS.
5. INSTALL CONDUIT DEFLECTION FITTING A PER DETAIL, SHEET BR26.
6. INSTALL NEMA 4X JUNCTION BOX IN BARRIER PER WSDOT SD. PLAN J–40.36–01.
7. ROUTE CONDUCTORS TO VAULT FOR SERVICE HOOK–UP. COORDINATE WITH ANDY SWAYNE AT PSE AT (425) 462–3852 OR (206) 604–5943.

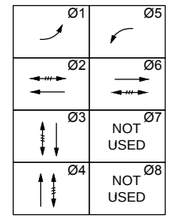

SIGNAL PHASE DIAGRAM

PERMISSIVE VEHICLE MOVEMENT
PROTECTED VEHICLE MOVEMENT
PEDESTRIAN MOVEMENT

20 10 0 20 40
SCALE

(X) POLE NOTES

1. CONSTRUCT FOUNDATION. PROVIDE AND INSTALL TYPE III SIGNAL STANDARD WITH A 25' MAST ARM. INSTALL TWO VEHICLE SIGNAL DISPLAYS, ONE PREEMPTION DETECTOR, AND ONE STREET NAME SIGN ON THE MASTARM. INSTALL ONE VEHICLE SIGNAL DISPLAY, ONE COUNTDOWN PEDESTRIAN DISPLAY, ONE APS PEDESTRIAN PUSH BUTTON ASSEMBLY AND ONE TERMINAL CABINET ON THE POLE. ATTACH ONE LED LUMINAIRE TO LUMINAIRE ARM ON SIGNAL POLE.
2. CONSTRUCT FOUNDATION. PROVIDE AND INSTALL TYPE PPB POST. INSTALL ONE APS PEDESTRIAN PUSH BUTTON ASSEMBLY.
3. CONSTRUCT FOUNDATION. PROVIDE AND INSTALL TYPE PS SIGNAL STANDARD. INSTALL TWO COUNTDOWN PEDESTRIAN DISPLAY AND ONE APS PEDESTRIAN PUSH BUTTON ASSEMBLY.
4. CONSTRUCT FOUNDATION. PROVIDE AND INSTALL TYPE III SIGNAL STANDARD WITH A 45' MAST ARM. INSTALL THREE VEHICLE SIGNAL DISPLAYS, ONE EMERGENCY PREEMPTION DETECTOR, AND ONE STREET NAME SIGN ON THE MASTARM. INSTALL ONE TERMINAL CABINET ON THE POLE. ATTACH ONE LED LUMINAIRE TO LUMINAIRE ARM ON SIGNAL POLE.
5. CONSTRUCT FOUNDATION. PROVIDE AND INSTALL TYPE PS SIGNAL STANDARD. INSTALL TWO COUNTDOWN PEDESTRIAN DISPLAYS AND TWO APS PEDESTRIAN PUSH BUTTON ASSEMBLIES.
6. CONSTRUCT FOUNDATION. PROVIDE AND INSTALL TYPE III SIGNAL STANDARD WITH A 25' MAST ARM. INSTALL TWO VEHICLE SIGNAL DISPLAYS, ONE EMERGENCY PREEMPTION DETECTOR, AND ONE STREET NAME SIGN ON THE MASTARM. INSTALL ONE VEHICLE SIGNAL DISPLAY AND ONE TERMINAL CABINET ON THE POLE. ATTACH ONE LED LUMINAIRE TO LUMINAIRE ARM ON SIGNAL POLE.
7. CONSTRUCT FOUNDATION. PROVIDE AND INSTALL TYPE II SIGNAL STANDARD WITH A 35' MAST ARM. INSTALL THREE VEHICLE SIGNAL DISPLAYS, ONE EMERGENCY PREEMPTION DETECTOR, AND ONE STREET NAME SIGN ON THE MASTARM. INSTALL TWO COUNTDOWN PEDESTRIAN DISPLAYS, TWO APS PEDESTRIAN PUSH BUTTON ASSEMBLIES, AND ONE TERMINAL CABINET ON THE POLE.
8. CONSTRUCT FOUNDATION. PROVIDE AND INSTALL TYPE PS SIGNAL STANDARD. INSTALL ONE COUNTDOWN PEDESTRIAN DISPLAY AND ONE APS PEDESTRIAN PUSH BUTTON ASSEMBLY ON THE POLE.

DETAIL A
SCALE: 1" = 10'

CHANNEL	PHASE
A	1 & 6
B	3
C	2 & 5
D	4

PREEMPT SEQUENCE

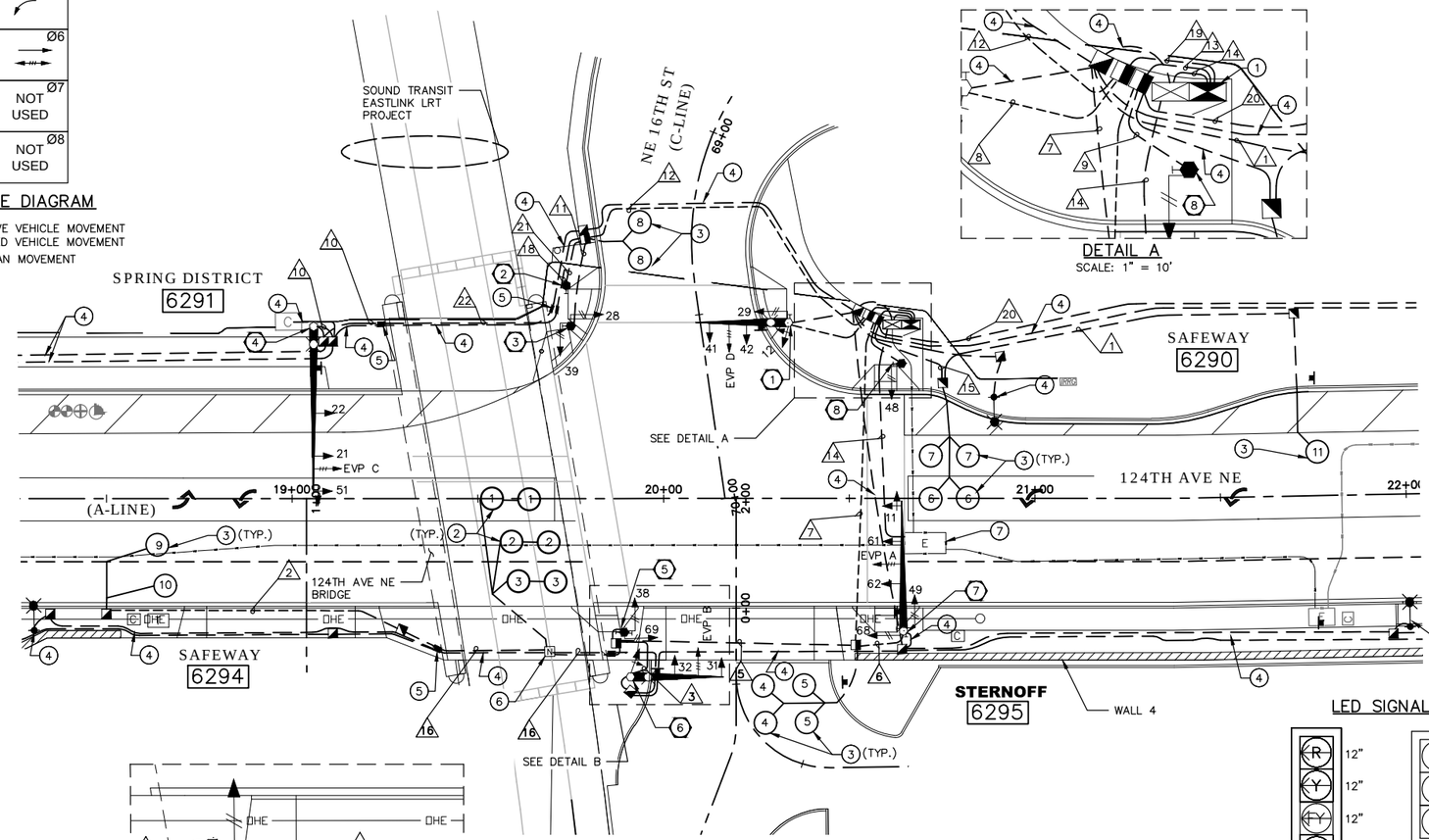

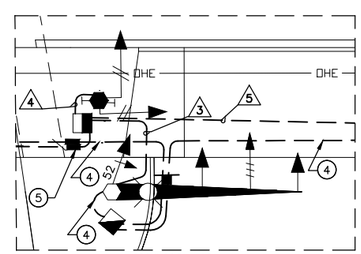

DETAIL B
SCALE: 1" = 10'

WIRING SCHEDULE

RUN #	CONDUIT SIZE (IN)	LOOP DETECTION (3PR)	PREEMPT DET (3CS)	SIGNAL HEAD 5C	COUNTDOWN PED. HEAD 5C	APS PUSH BUTTON 2CSH	POWER #2	INTERCONNECT 12SMFO	INTERCONNECT 6PCC(#19)	REMARKS
1	2"	1								
2	2"	2								
3	2"		1	2						
	2"									SPARE
4	2"				2	2				
5	2"	2	1	2	2	2				
	2"									SPARE
6	2"		1	2	2	2				
	2"									SPARE
7	4"	7	2	4	4	4				
	3"									SPARE
8	2"		1	2	1	1				
	2"									SPARE
9	2"				1	1				
10	2"		1	2						
11	2"				2	1				
12	3"	1	1	2	2	2				
	3"									SPARE
13	3"	5	2	4						
	3"	5			5	5				
	3"									SPARE
14	2"						3			
15	2"	3								
16	2" RGS	5								
17	2"		1	2	2	2				
18	2"					1				
19	3"	1	2	4	3	3				
20	3"							1	1	
	3"									SPARE
21	2"					1				
22	2" RGS		1	2						

1. ALL CONDUITS CONTAINING CONDUCTORS SHALL INCLUDE GROUND WIRE. GROUND WIRE SIZE SHALL MATCH THE LARGEST CONDUCTORS (MINIMUM #8 UNLESS OTHERWISE NOTED).
2. ALL EMPTY / SPARE CONDUITS SHALL CONTAIN MULE TAPE.

LED SIGNAL DISPLAYS

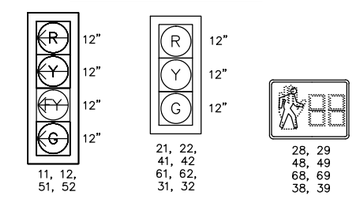

NOTES:

1. ALL VEHICLE SIGNAL DISPLAYS SHALL BE 12" LED WITH BACKPLATES AND SHALL HAVE TUNNEL VISORS.
2. ALL PEDESTRIAN SIGNAL HEADS SHALL BE COUNTDOWN SOLID LED AND UTILIZE TYPE E MOUNT. DO NOT OUTLINE LED WITH SYMBOLIC LEGENDS AND "Z"CRATE VISORS.
3. ALL VEHICLE SIGNAL HEADS ON A TYPE II OR III SIGNAL STANDARD SHALL UTILIZE TYPE "M" MOUNT ON MASTARM AND TYPE "K" MOUNT ON SIGNAL POLE.

NO.	DATE	BY	APPR.	REVISIONS

Approved By

TRANSPORTATION DESIGN MANAGER — DATE
M. ARAKELYAN
PROJECT MANAGER — DATE

M OLSON — DESIGNED BY — DATE
J. BUCHANAN — DRAWN BY — DATE
J. SHIPPY — CHECKED BY — DATE

City of Bellevue
TRANSPORTATION DEPARTMENT

HDR

124th Ave NE - NE Spring Blvd to NE Ichigo Way

TRAFFIC SIGNAL PLAN
16TH / 124TH INTERSECTION

SHEET NAME TS1

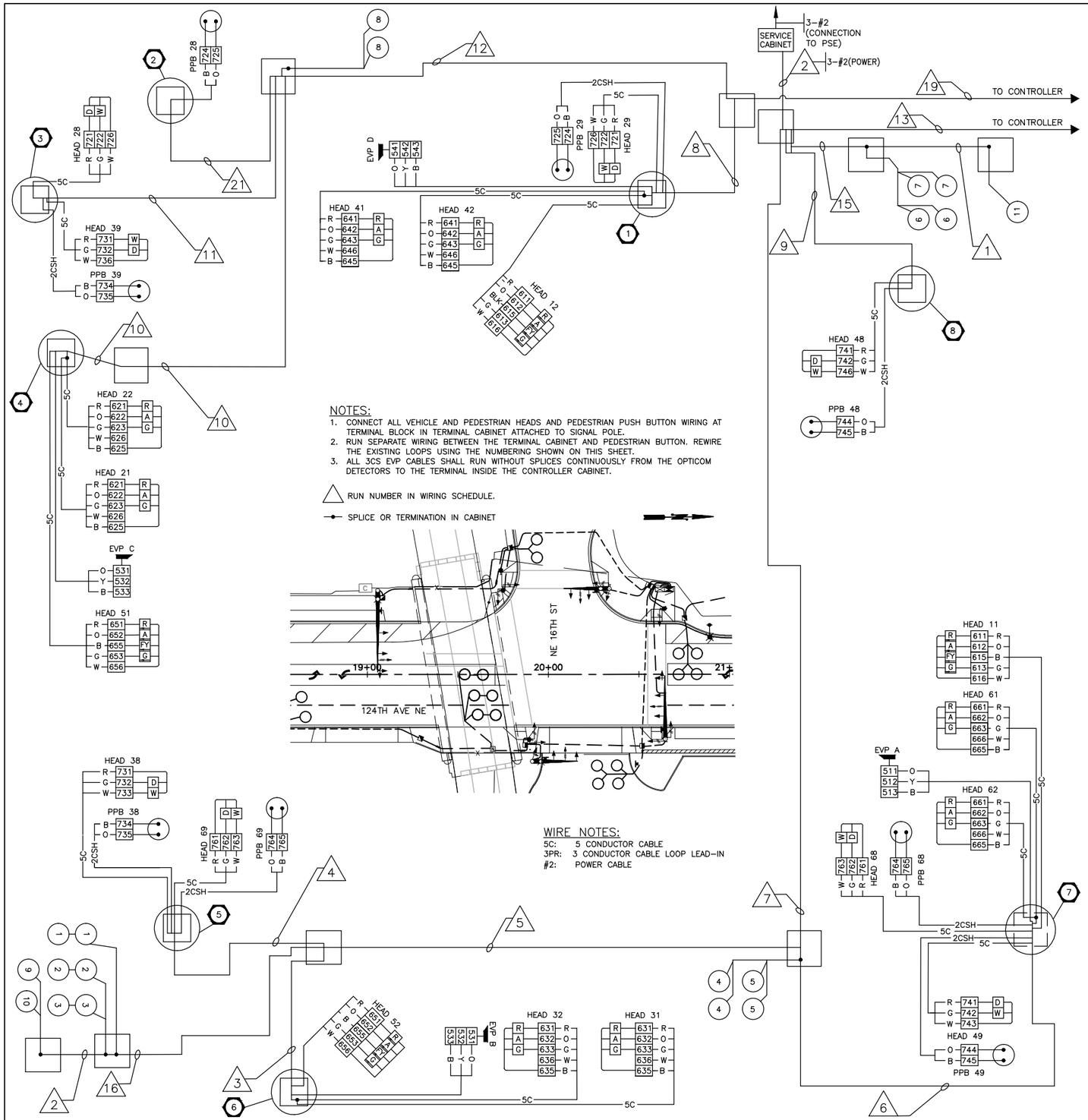

NOTES:

1. CONNECT ALL VEHICLE AND PEDESTRIAN HEADS AND PEDESTRIAN PUSH BUTTON WIRING AT TERMINAL BLOCK IN TERMINAL CABINET ATTACHED TO SIGNAL POLE.
2. RUN SEPARATE WIRING BETWEEN THE TERMINAL CABINET AND PEDESTRIAN BUTTON. REWIRE THE EXISTING LOOPS USING THE NUMBERING SHOWN ON THIS SHEET.
3. ALL 3CS EVP CABLES SHALL RUN WITHOUT SPLICES CONTINUOUSLY FROM THE OPTICOM DETECTORS TO THE TERMINAL INSIDE THE CONTROLLER CABINET.

△ RUN NUMBER IN WIRING SCHEDULE.

—•— SPLICE OR TERMINATION IN CABINET

WIRE NOTES:

5C: 5 CONDUCTOR CABLE
3PR: 3 CONDUCTOR CABLE LOOP LEAD-IN
#2: POWER CABLE

NOTES:

[X] NO TERMINAL REQUIRED. CONNECT IDENTIFIED WIRES TO NEUTRAL (AC-) BUS.

[+] NO TERMINAL REQUIRED. CONNECT IDENTIFIED WIRES TO DETECTOR COMMON BUS.

[ ] TERMINAL REQUIRED. CONNECT IDENTIFIED WIRES TO IDENTIFIED TERMINAL.

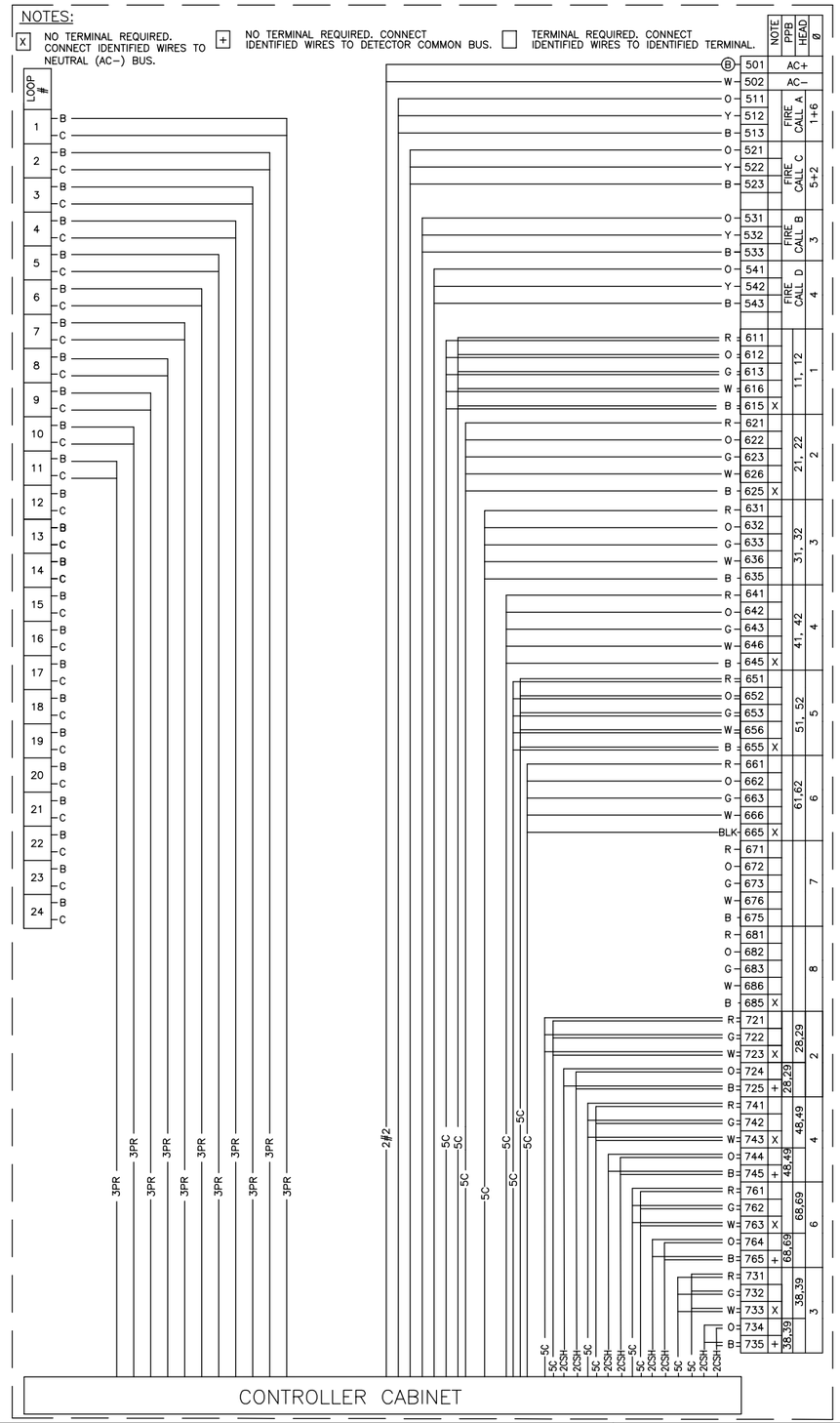

NO.	DATE	BY	APPR.	REVISIONS

Approved By

TRANSPORTATION DESIGN MANAGER — DATE
M. ARAKELYAN
PROJECT MANAGER — DATE

M. OLSON — DESIGNED BY — DATE
J. BUCHANAN — DRAWN BY — DATE
J. SHIPPY — CHECKED BY — DATE

City of Bellevue
TRANSPORTATION DEPARTMENT

HDR

124th Ave NE - NE Spring Blvd to NE Ichigo Way

WIRING DIAGRAM
16TH / 124TH INTERSECTION

SHEET NAME **TS2**

SHT 162 OF 198

95% SUBMITTAL NOT FOR CONSTRUCTION

GENERAL NOTES:

1. UNLESS OTHERWISE NOTED, ALL DIMENSIONS ARE IN FEET.
2. SEE COB STANDARD PLAN TSSL-18 FOR SIGNAL STANDARD FOUNDATION DETAIL.
3. SEE WSDOT STANDARD PLAN J-21.10-03 FOR TYPE PS AND TYPE 1 SIGNAL STANDARD FOUNDATION DETAILS.

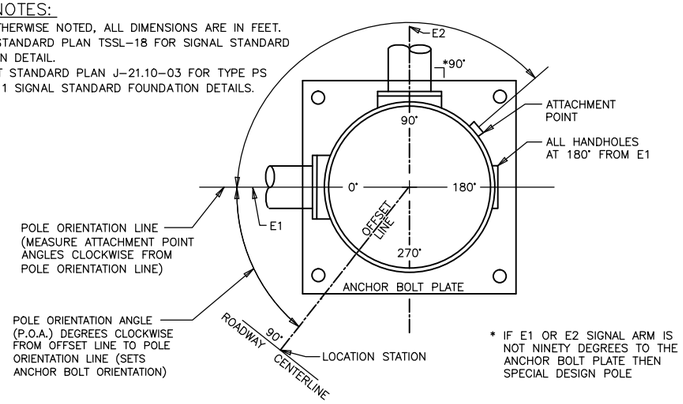

* IF E1 OR E2 SIGNAL ARM IS NOT NINETY DEGREES TO THE ANCHOR BOLT PLATE THEN SPECIAL DESIGN POLE

POLE ORIENTATION AND ATTACHMENT POINT DETAIL

NOT TO SCALE

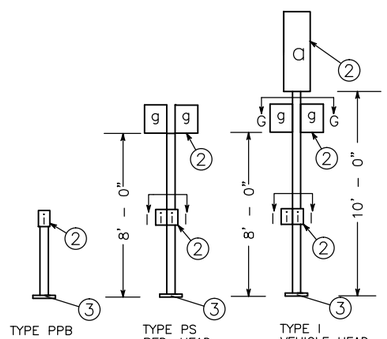

TYPE PPB
PPB POST

TYPE PS
PED. HEAD
STANDARD

TYPE I
VEHICLE HEAD
STANDARD

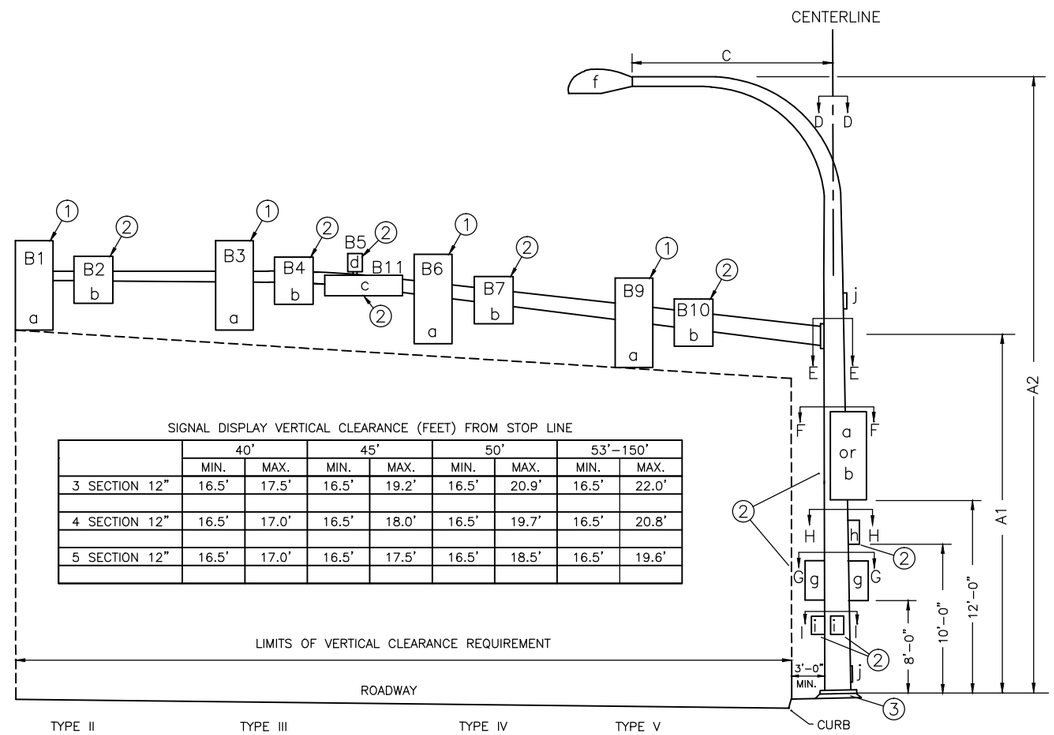

SIGNAL DISPLAY VERTICAL CLEARANCE (FEET) FROM STOP LINE

	40'		45'		50'		53'-150'	
	MIN.	MAX.	MIN.	MAX.	MIN.	MAX.	MIN.	MAX.
3 SECTION 12"	16.5'	17.5'	16.5'	19.2'	16.5'	20.9'	16.5'	22.0'
4 SECTION 12"	16.5'	17.0'	16.5'	18.0'	16.5'	19.7'	16.5'	20.8'
5 SECTION 12"	16.5'	17.0'	16.5'	17.5'	16.5'	18.5'	16.5'	19.6'

TYPE II
MAST ARM
SIGNAL STANDARD

TYPE III
COMBINATION LIGHTING
AND MAST ARM
SIGNAL STANDARD

TYPE IV
STRAIN POLE
STANDARD

TYPE V
COMBINATION LIGHTING
AND STRAIN
POLE STANDARD

TYPE SD
SPECIAL DESIGN STANDARD

NOTES

1. MOUNTING COUPLING INSTALLED AT OFFSET DISTANCE INDICATED IN CHART.
2. FIELD INSTALLED.
3. FOR FOUNDATION DETAILS, DEPTH TABLE, AND IDENTIFICATION TAGS, SEE WSDOT STANDARD PLANS

ALTERNATE NOTE 1 FOR TYPE N MOUNT ONLY:
DRILL 1" HOLE IN MAST ARM AND INSTALL PLASTIC SPLIT BUSHING FOR CABLE ENTRANCE.

LEGEND

a. Vehicle Display
b. Sign
c. Street Name Sign
d. Pre-Empt Detector
e. Deleted (10/22/90)
f. Luminaire
g. Pedestrian Display
h. Cabinet
i. PPB-M
j. Handhole

SIGNAL STANDARD DETAIL CHART

STD. No. (#)	FIELD LOCATION					TYPE	MOUNTING HEIGHT (FT)		MAST ARM LENGTH (FT)	SIGNAL MAST ARM DATA																				(X)(Y)(Z) TOTAL (FT)³	(X)(Y)(Z) ULTIMATE LOAD	LUMINAIRE ARM (FT)	POLE ATTACHMENT POINT ANGLES (deg)									FOUNDATION DEPTH* (FT)			REMARKS
										OFFSET DISTANCE (FT) (Z) (POLE ℄ TO ATTACHMENT POINT)										WINDLOAD AREAS (FT)² (X)(Y)																								
	STATION	OFFSET	LT	RT	P.O.A.		A1	A2		B1	B2	B3	B5	B6	B7	B9	B10	B11	B12	B1	B2	B3	B5	B6	B7	B9	B10	B11	B12			C	D	E1	E2	F	G1	G2	H	I1	I2	3' RD.	3' SQ.	4' RD.	
1	A-LINE 20+33.5	47.5	X		90	III	16.5	35	25	21.5		11.5	16.0					5.5		9.2		9.2						11		460	750	8	0	0		283	90		135	90		8	7	7	
2	A-LINE 19+74.0	57.0	X		0	PPB																																		0					FOUNDATION PER WSDOT STD. PLAN J-20.10-03
3	A-LINE 19+75.0	46.5	X		0	PS																														90	180		90					FOUNDATION PER WSDOT STD. PLAN J-21.10-04
4	A-LINE 19+06.0	46.0	X		0	III	16.5	35	45	44.0		35.0		23.5				10		11.6		9.2		9.2				11		1159	1816	8	0	0					135			13	8	8	
5	A-LINE 19+89.5	36.0		X	0	PS																														90			135					FOUNDATION PER WSDOT STD. PLAN J-21.10-04
6	A-LINE 19+91.0	48.0		X	90	III	16.5	35	25	24.0		11.5	18					4		9.2		9.2						11		375	575	8	0	0			90	180	135	0	270	8	7	7	
7	A-LINE 20+64.5	35.5		X	0	II	16.5		35	33.5		24.0	18.0	12.5				5.0		11.6		9.2		9.2				11		779	1239			0			90	180	135	180	270	11	8	8	
8	A-LINE 20+64.0	36.0	X		0	PS																														90			90					FOUNDATION PER WSDOT STD. PLAN J-21.10-04

* MAST ARM POLE FOUNDATION PER WSDOT STD. PLAN J-26.10-02 FOR ALLOWABLE LATERAL BEARING PRESSURE = 1,500 PSF.

NO.	DATE	BY	APPR.	REVISIONS

Approved By

TRANSPORTATION DESIGN MANAGER — DATE
M. ARAKELYAN
PROJECT MANAGER — DATE

M. OLSON
DESIGNED BY — DATE
J. BUCHANAN
DRAWN BY — DATE
J. SHIPPY
CHECKED BY — DATE

City of Bellevue
TRANSPORTATION DEPARTMENT

124th Ave NE - NE Spring Blvd to NE Ichigo Way

POLE SCHEDULE
16TH / 124TH INTERSECTION

SHEET NAME TS3

SECTION 28, T. 25 N., R5E., W.M.
KING COUNTY

95% SUBMITTAL NOT FOR CONSTRUCTION

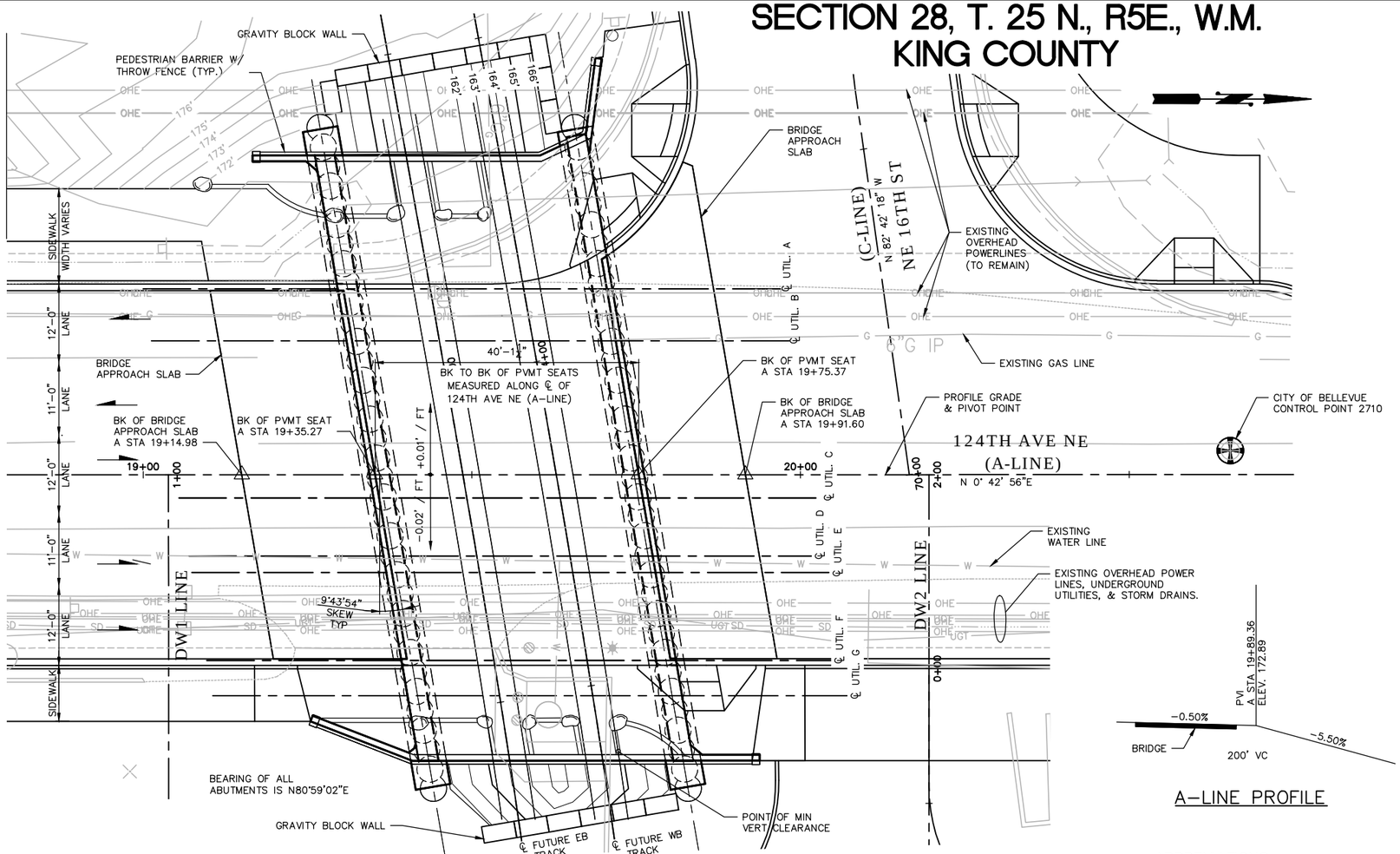

PLAN

A-LINE PROFILE

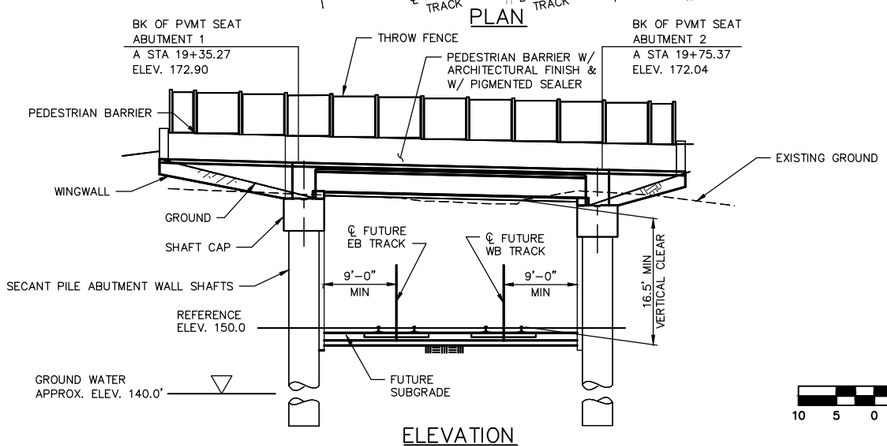

ELEVATION
(LOOKING WEST)

DATUM
(NAVD) 88

SCALE
10 5 0 10 20

NOTE: GRADE ELEVATIONS SHOWN ARE FINISHED GRADE AT TOP OF ROADWAY ON A-LINE AND ARE EQUAL TO PROFILE GRADE.

GENERAL NOTES:

1. ALL MATERIALS AND WORKMANSHIP SHALL BE IN ACCORDANCE WITH THE REQUIREMENTS OF THE WITH THE WASHINGTON STATE DEPARTMENT OF TRANSPORTATION STANDARD SPECIFICATIONS FOR ROAD, BRIDGE AND MUNICIPAL CONSTRUCTION, DATED 2014, AND AMENDMENTS.
2. THE STRUCTURE HAS BEEN DESIGNED IN ACCORDANCE WITH THE REQUIREMENTS OF THE AASHTO LRFD BRIDGE DESIGN SPECIFICATIONS SEVENTH EDITION–2014 AND INTERIMS, AND THE SOUND TRANSIT LINK DESIGN CRITERIA MANUAL (DCM) REVISION 2, JULY 2012. SEISMIC DESIGN HAS BEEN COMPLETED USING THE FOLLOWING SEISMIC PARAMETERS:

SEISMIC DESIGN PARAMETERS			
SEISMIC DESIGN CASE:	OPERATING DESIGN EARTHQUAKE (ODE) 150–YEAR RETURN PERIOD	MAXIMUM DESIGN EARTHQAKE (MDE) 2,500–YEAR RETURN PERIOD	AASHTO/WSDOT 1,000–YEAR RETURN PERIOD
(Fpga)(PGA) = As	(1.44)(0.18) = 0.259	(1.0)(.0.592) = 0.592	(1.07)(.425) = 0.454
(Fa)(Ss) = SDs	(1.49)(.39) = 0.581	(1.0)(1.336) = 1.336	(1.12)(.951) = 1.065
(Fv)(S1) = SD1	(2.28)(.13) = 0.296	(1.55)(.452) = 0.700	(1.76)(.316) = 0.556
SITE CLASS	D	D	D
Kh (DESIGN)	0.259 (NO REDUCTION OF As)	0.296 (50% REDUCTION OF As)	0.227 (50% REDUCTION OF As)

3. DEAD LOAD INCLUDES ADDITIONAL ROADWAY WEARING SURFACE OF 25 POUNDS PER SQUARE FOOT.
4. DESIGN DEAD LOAD:

WATERLINE W/ CASING	187 LB/FT 1 EA.
STORM DRAIN W/ CASING	187 LB/FT 2 EA.
JOINT UTILITY CONDUITS (JUT)	120 LB/FT 2 EA.
OCS LINE	8000 LB/GIRDER.

5. MAXIMUM DESIGN LOADS FOR 4'–0" DIAMETER SECONDARY SHAFTS FOR ABUTMENT 1 & 2 IS AS FOLLOWS:

   ULT. END BEARING PRESSURE = 60 KSF
   ULT. SKIN FRICTION = 1 KSF

6. FALSEWORK SHALL BE CAREFULLY RELEASED TO PREVENT IMPACT OR UNDUE STRESS IN THE STRUCTURE.
7. CONCRETE IN THE ROADWAY DECK SHALL BE CONC CL 4000D, PRIMARY SHAFTS SHALL BE LEAN CONCRETE, SECONDARY SHAFTS SHALL BE CONC CL 4000P, ALL OTHER CAST–IN–PLACE CONCRETE SHALL BE CLASS 4000 UNLESS NOTED OTHERWISE.
8. ALL STEEL REINFORCING SHALL CONFORM TO ASTM A706 UNLESS NOTED OTHERWISE.
9. THE EXPOSED EXTERIOR SURFACE OF WINGWALLS, BRIDGE GIRDERS, END DIAPHRAGMS, SHAFT CAP, & CONCRETE FASCIA SHALL RECEIVE A PIGMENTED SEALER.
10. UNLESS OTHERWISE SHOWN ON THE PLANS, THE CONCRETE COVER MEASURED FROM THE FACE OF THE CONCRETE TO THE FACE OF ANY REINFORCING BAR SHALL BE AS FOLLOWS:

TOP OF ROADWAY SLAB	2½"
BOTTOM OR ROADWAY SLAB	1"
CONCRETE CAST AGAINST EARTH	3"
CONCRETE EXPOSED TO EARTH OR WEATHER	
PRIMARY REINFORCEMENT	2"
SECONDARY REINFORCEMENT (TIES OR STIRRUPS)	1½"

11. NXX INDICATES REINFORCING BAR MARK NUMBER.
12. ▽ INDICATES EPOXY COATED BAR.
13. ALL EXISTING DIMENSIONS AND EXISTING ELEVATIONS SHALL BE VERIFIED IN THE FIELD BY THE CONTRACTOR.
14. THE UTILITY ℄ ARE APPROXIMATE ONLY. CONTRACTOR SHALL COORDINATE THESE PLANS WITH THE RELEVANT UTILITY AND DRAINAGE PLAN SHEETS.
15. U.N.O. – ALL EXPOSED CIP CONCRETE SURFACES SHALL RECEIVE A CLASS 1 FINISH.

ABBREVIATIONS

ABUT.	ABUTMENT
BK	BACK
BF	BACK FACE
DIAPH.	DIAPHRAGM
DIA/DIAM.	DIAMETER
EB	EAST BOUND
EF	EACH FACE
EW	EACH WAY
FF	FRONT FACE
PVMT	PAVEMENT
NTS/N.T.S.	NOT TO SCALE
TEMP	TEMPORARY
U.N.O.	UNLESS NOTED OTHERWISE
WB	WEST BOUND

LEGEND:

A / BRW2 — IDENTIFIES SECTION, VIEW, OR DETAIL
TAKEN OR SHOWN ON BRIDGE SHEET BRW2

A / – — TAKEN OR SHOWN ON SAME SHEET

PRESTRESSED PRECAST GIRDERS (W42G)
LIVE LOADING: HL–93

NO.	DATE	BY	APPR.	REVISIONS

Approved By
TRANSPORTATION DESIGN MANAGER — DATE
M. ARAKELYAN
PROJECT MANAGER — DATE

R. RICHARDSON
DESIGNED BY — DATE
J. FRYE
DRAWN BY — DATE
D. KORPI
CHECKED BY — DATE

City of Bellevue
TRANSPORTATION DEPARTMENT

HDR

124th Ave NE - NE Spring Blvd to NE Ichigo Way

BRIDGE PLAN, PROFILE & NOTES

SHEET NAME BR01

SHT 164 OF 198

95% SUBMITTAL NOT FOR CONSTRUCTION

GENERAL NOTES:

1. FOLLOW STEPS 1 THRU 6 FOR "STAGE 1 CONSTRUCTION".
2. REPEAT STEPS 3 THRU 5 FOR "STAGE 2 CONSTRUCTION".
3. PLACE DECK CLOSURE POUR AND COMPLETE STEP 6 AFTER "STAGE 2 CONSTRUCTION" IS COMPLETE.
4. SEE SHEET BR03 FOR STAGED CONSTRUCTION SEQUENCE AND DETAILS.

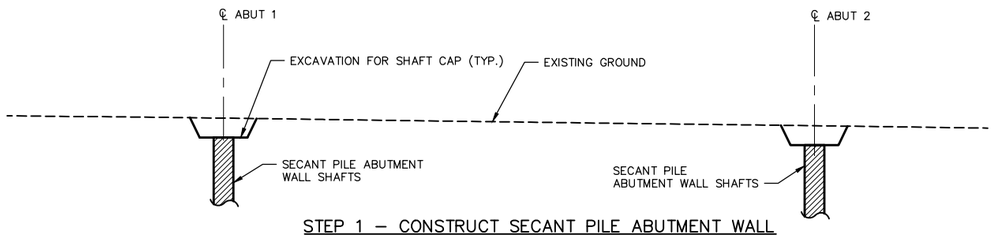

STEP 1 – CONSTRUCT SECANT PILE ABUTMENT WALL

1. GRADE AND EXCAVATE TO BOTTOM OF SHAFT CAP.
2. CONSTRUCT SECANT PILE ABUTMENT WALL PRIMARY SHAFTS AND SECONDARY SHAFTS AS SHOWN ON SHAFT CONSTRUCTION SEQUENCE.

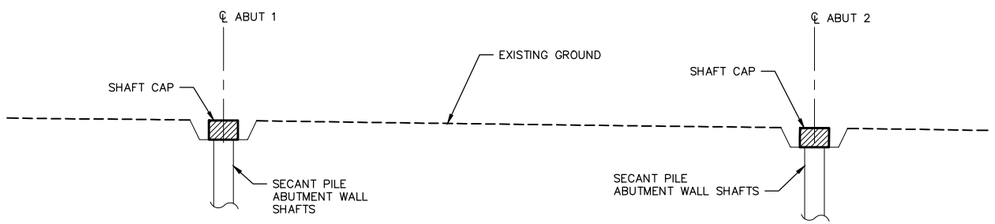

STEP 2 – CONSTRUCT SHAFT CAPS

1. CONSTRUCT SHAFT CAPS TO LIMITS FOR STAGED CONSTRUCTION.

BRIDGE CONSTRUCTION SEQUENCE – SUBSTRUCTURE

N.T.S.

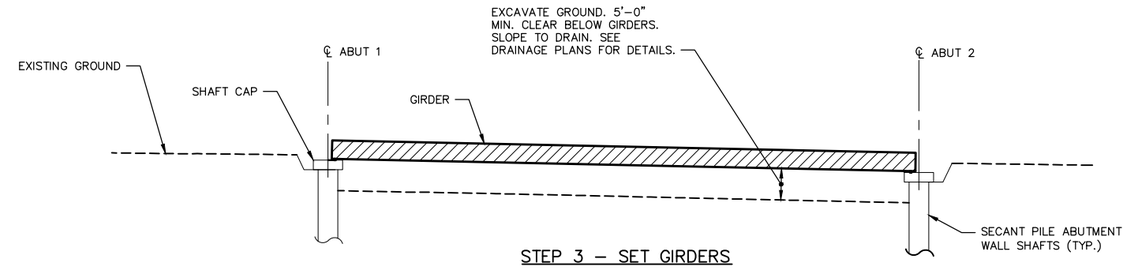

STEP 3 – SET GIRDERS

INSTALL TEMPORARY BRACING FOR ERECTION IN ACCORDANCE WITH STD. SPEC SECTION 6-02.3(17)F.

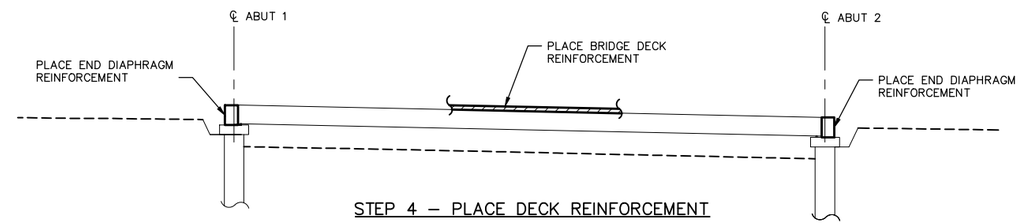

STEP 4 – PLACE DECK REINFORCEMENT

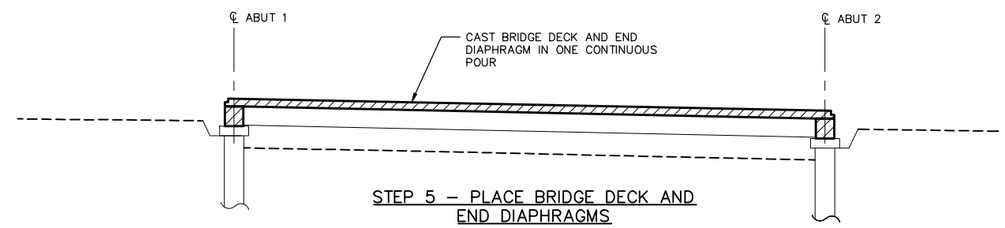

STEP 5 – PLACE BRIDGE DECK AND END DIAPHRAGMS

1. REPEAT STEPS 3 THRU 5 FOR HALF OF BRIDGE CONSTRUCTED IN STAGE 2.
2. PLACE CLOSURE POUR.

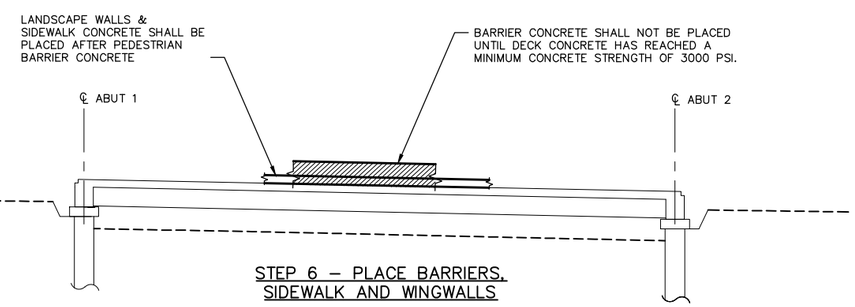

STEP 6 – PLACE BARRIERS, SIDEWALK AND WINGWALLS

1. CONSTRUCT BARRIERS, SIDEWALK AND WINGWALLS.
2. BACKFILL BEHIND ABUTMENT AFTER WINGWALLS ARE COMPLETED.
3. CONSTRUCT BRIDGE APPROACH SLABS.

BRIDGE CONSTRUCTION SEQUENCE – SUPERSTRUCTURE

N.T.S.

NO.	DATE	BY	APPR.	REVISIONS

Approved By

TRANSPORTATION DESIGN MANAGER M. ARAKELYAN DATE
PROJECT MANAGER DATE

R. RICHARDSON
DESIGNED BY DATE
J. FRYE
DRAWN BY DATE
D. KORPI
CHECKED BY DATE

City of Bellevue
TRANSPORTATION DEPARTMENT

124th Ave NE - NE Spring Blvd to NE Ichigo Way

BRIDGE CONSTRUCTION SEQUENCE

SHEET NAME BR02

SHT 165 OF 198

95% SUBMITTAL NOT FOR CONSTRUCTION

GENERAL NOTES:

1. SEE SHEET BR02 FOR BRIDGE CONSTRUCTION SEQUENCE.
2. SEE STC SHEETS FOR ROADWAY STAGING PLAN & DETAILS.
3. PRIOR TO CONSTRUCTION OF SHAFT CAP AND SUPERSTRUCTURE, CONSTRUCT ALL ABUTMENT 1 AND ABUTMENT 2 PRIMARY AND SECONDARY SHAFTS.
4. CONTRACTOR SHALL DESIGN AND CONSTRUCT A TEMPORARY CROSSING TO SUPPORT ROADWAY TRAFFIC OVER THE SHAFTS AT ABUTMENTS 1 AND 2. TEMPORARY CROSSING SHALL SUPPORT HS-20 LIVE LOAD WITH 30% DYNAMIC IMPACT.
5. VERIFY ALL EXISTING UTILITIES HAVE BEEN RELOCATED PRIOR TO BEGINING CONSTRUCTION OF THE SHAFTS.

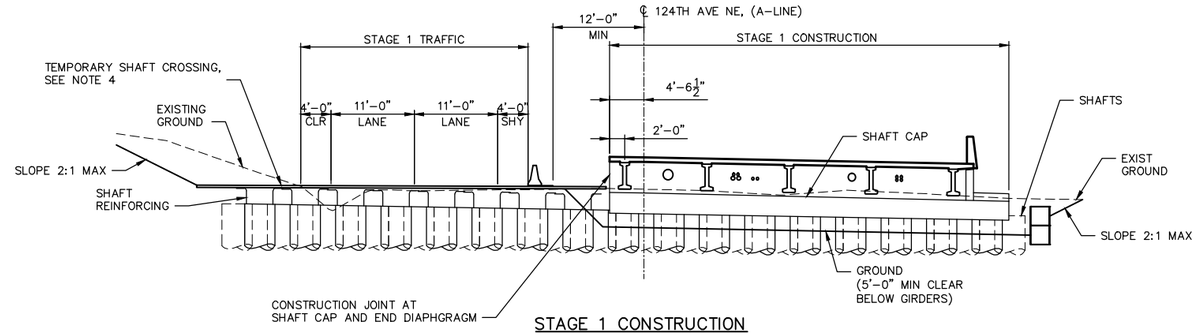

STAGE 1 CONSTRUCTION

CONSTRUCT EAST PORTION OF SHAFT CAP AND SUPERSTRUCTURE.

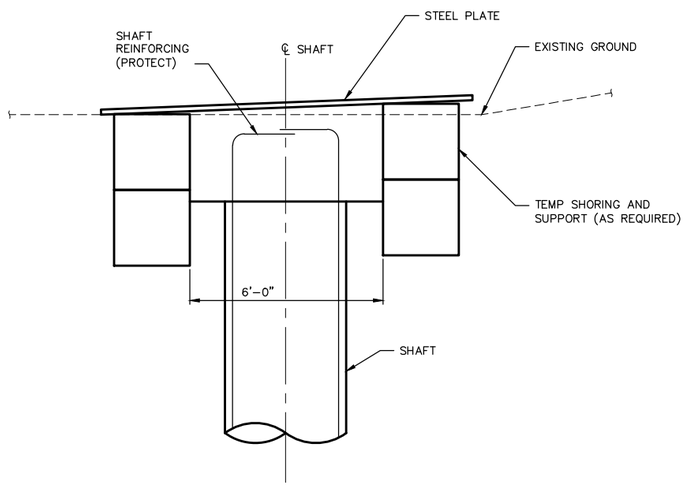

TEMPORARY SHAFT CROSSING

N.T.S.

(CONCEPTUAL OPTION SHOWN. SEE NOTE 4)

A

–

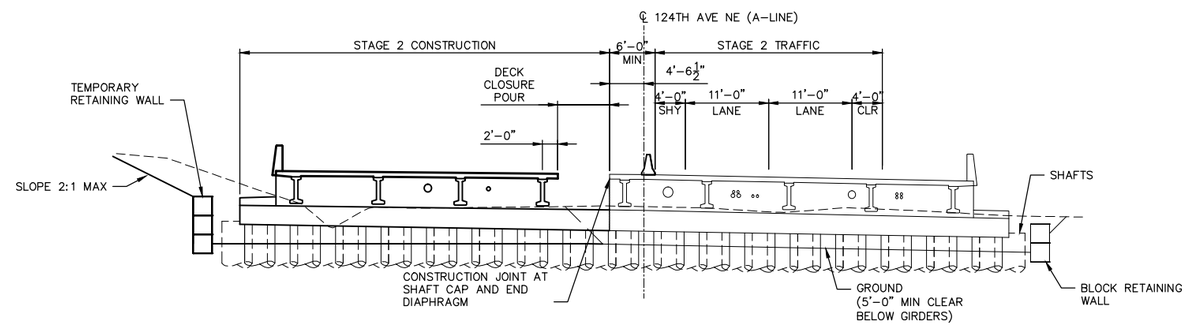

STAGE 2 CONSTRUCTION

CONSTRUCT WEST PORTION OF SHAFT CAP AND SUPERSTRUCTURE

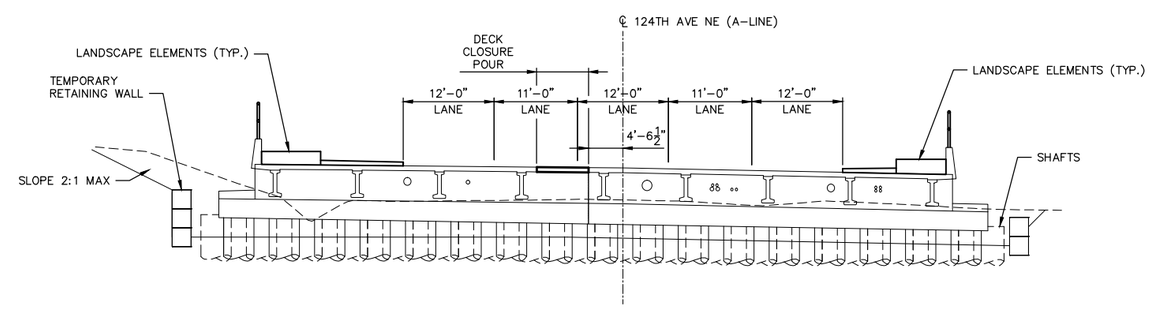

FSTAGE 3 CONSTRUCTION

CONSTRUCT CLOSURE POUR, SIDEWALKS, PEDESTRIAN BARRIERS, AND LANDSCAPE ELEMENTS

STAGED CONSTRUCTION SEQUENCE

N.T.S. (LOOKING AHEAD ON STATION)

HORIZONTAL DIMENSIONS MEASURED NORMAL TO ℄ OF 124TH AVE NE

NO.	DATE	BY	APPR.	REVISIONS

Approved By

TRANSPORTATION DESIGN MANAGER — DATE
M. ARAKELYAN
PROJECT MANAGER — DATE

R. RICHARDSON
DESIGNED BY — DATE
J. FRYE
DRAWN BY — DATE
D. KORPI
CHECKED BY — DATE

City of Bellevue
TRANSPORTATION DEPARTMENT

HDR

124th Ave NE - NE Spring Blvd to NE Ichigo Way

BRIDGE
STAGED CONSTRUCTION

SHEET NAME BR03

SHT 166 OF 198

95% SUBMITTAL NOT FOR CONSTRUCTION

GENERAL NOTES:

1. CONCRETE IN PRIMARY SHAFTS SHALL BE LEAN CONCRETE.
2. CONCRETE IN SECONDARY SHAFTS SHALL BE CONCRETE CLASS 4000P.
3. SHAFT DESIGNATION:
   P## = PRIMARY SHAFT
   S## = SECONDARY SHAFT
4. DURING SHAFT CONSTRUCTION, AT LEAST ONE TRAFFIC LANE IN EACH DIRECTION SHALL REMAIN OPEN. SEE STC SHEETS FOR ADDITIONAL DETAILS.
5. ALL UNDERGROUND FRANCHISE UTILITIES SHALL BE TEMPORARILY RELOCATED PRIOR TO SHAFT CONSTRUCTION BY OTHERS.
6. CONTRACTOR SHALL BE RESPONSIBLE FOR ALL TEMPORARY RELOCATION OF WATER LINES, GAS LINES, STORM DRAIN LINES AND OVERHEAD ELECTRICAL (OHE) PRIOR TO SHAFT CONSTRUCTION.
7. OHE ON WEST SIDE OF 124TH AVENUE NE TO REMAIN. CONTRACTOR SHALL EXERCISE EXTREME CAUTION WHEN CONSTRUCTING THE SHAFT FOUNDATION WITHIN THE VICINITY OF THE (OHE).

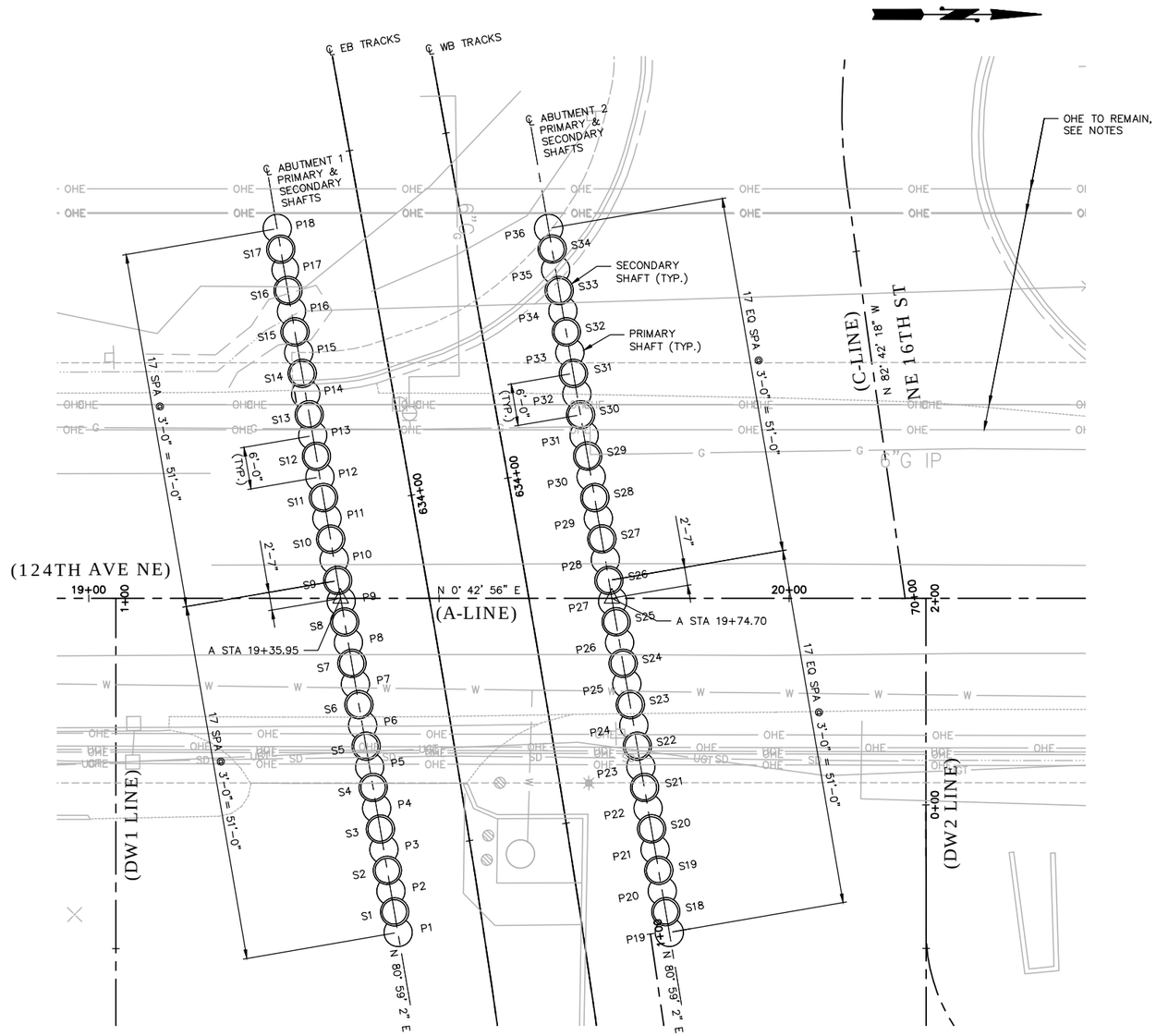

FOUNDATION PLAN

SECANT PILE ABUTMENT WALL – PRIMARY SHAFT SCHEDULE

	SHAFT NO.	TOP OF SHAFT ELEV. 'A'	BOTTOM OF SHAFT ELEV. 'B'	SHAFT LENGTH
	#	(FT)	(FT)	(FT)
ABUTMENT 1	P1	163.1	146.4	16.6
	P2	163.2	146.4	16.7
	P3	163.3	146.5	16.8
	P4	163.4	146.5	16.9
	P5	163.5	146.5	17.0
	P6	163.6	146.5	17.1
	P7	163.7	146.5	17.2
	P8	163.8	146.5	17.3
	P9	163.9	146.6	17.3
	P10	164.0	146.6	17.4
	P11	164.1	146.6	17.5
	P12	164.2	146.6	17.6
	P13	164.3	146.6	17.7
	P14	164.4	146.6	17.8
	P15	164.5	146.7	17.9
	P16	164.6	146.7	18.0
	P17	164.7	146.7	18.0
	P18	164.8	146.7	18.1
ABUTMENT 2	P19	162.2	146.4	15.8
	P20	162.3	146.4	15.9
	P21	162.4	146.4	16.0
	P22	162.5	146.5	16.1
	P23	162.6	146.5	16.2
	P24	162.7	146.5	16.3
	P25	162.9	146.5	16.3
	P26	163.0	146.5	16.4
	P27	163.1	146.5	16.5
	P28	163.2	146.6	16.6
	P29	163.3	146.6	16.7
	P30	163.4	146.6	16.8
	P31	163.5	146.6	16.9
	P32	163.7	146.6	17.0
	P33	163.8	146.6	17.1
	P34	163.9	146.6	17.2
	P35	164.0	146.7	17.3
	P36	164.1	146.7	17.4

SECANT PILE ABUTMENT WALL – SECONDARY SHAFT SCHEDULE

	SHAFT NO.	SHAFT TYPE	TOP OF SHAFT ELEV. 'A'	BOTTOM OF SHAFT ELEV. 'B'	SHAFT LENGTH
	#	TYPE	(FT)	(FT)	(FT)
ABUTMENT 1	S1	1	163.1	117.4	45.7
	S2	1	163.2	117.5	45.8
	S3	1	163.3	117.5	45.9
	S4	1	163.4	117.5	45.9
	S5	1	163.5	117.5	46.0
	S6	1	163.6	117.5	46.1
	S7	1	163.7	117.5	46.2
	S8	1	163.9	117.6	46.3
	S9	1	164.0	117.6	46.4
	S10	1	164.1	117.6	46.5
	S11	1	164.2	117.6	46.6
	S12	2	164.3	117.6	46.6
	S13	2	164.4	117.6	46.7
	S14	2	164.5	117.7	46.8
	S15	2	164.6	117.7	46.9
	S16	2	164.7	117.7	47.0
	S17	2	164.8	117.7	47.1
ABUTMENT 2	S18	1	162.2	117.4	44.8
	S19	1	162.3	117.4	44.9
	S20	1	162.5	117.4	45.0
	S21	1	162.6	117.5	45.1
	S22	1	162.7	117.5	45.2
	S23	1	162.8	117.5	45.3
	S24	1	162.9	117.5	45.4
	S25	1	163.0	117.5	45.5
	S26	1	163.1	117.5	45.6
	S27	1	163.3	117.6	45.7
	S28	1	163.4	117.6	45.8
	S29	2	163.5	117.6	45.9
	S30	2	163.6	117.6	46.0
	S31	2	163.7	117.6	46.1
	S32	2	163.8	117.6	46.2
	S33	2	163.9	117.7	46.3
	S34	2	164.1	117.7	46.4

TYPE–2 SHAFTS SHALL BE SPLICED IN THE FIELD WITH MECHANICAL COUPLERS.

10 5 0 10 20
SCALE

NO.	DATE	BY	APPR.	REVISIONS

Approved By

TRANSPORTATION DESIGN MANAGER — DATE
M. ARAKELYAN
PROJECT MANAGER — DATE

R. RICHARDSON — DESIGNED BY — DATE
J. FRYE — DRAWN BY — DATE
D. KORPI — CHECKED BY — DATE

City of Bellevue
TRANSPORTATION DEPARTMENT

HDR

124th Ave NE - NE Spring Blvd to NE Ichigo Way

BRIDGE FOUNDATION LAYOUT PLAN

SHEET NAME BR04

SHT 167 OF 198

95% SUBMITTAL NOT FOR CONSTRUCTION

GENERAL NOTES:

1. MULTIPLE PASSES OF SHAFT CONSTRUCTION WILL BE REQUIRED ALONG THE ABUTMENT.
2. PRIMARY SHAFTS SHALL BE FILLED WITH LEAN CONCRETE.
3. SECONDARY SHAFTS SHALL BE FILLED WITH CONCRETE CLASS 4000P.
4. SECONDARY SHAFTS SHALL BE CSL TESTED.

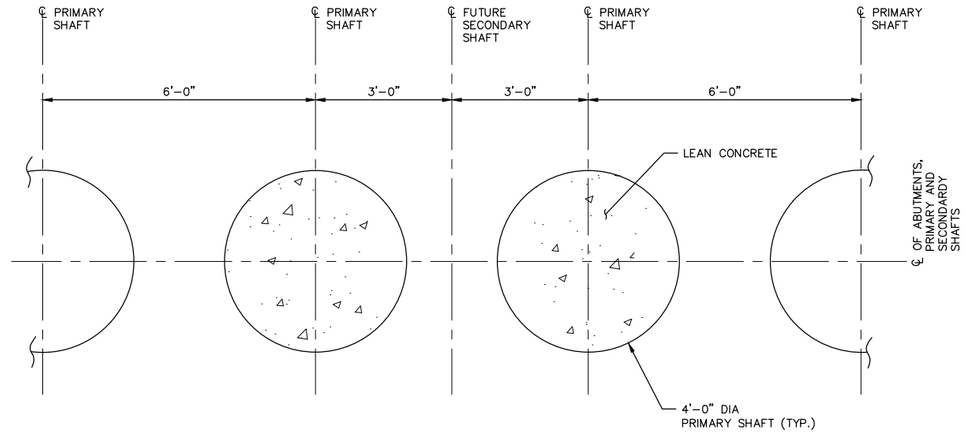

STEP 1 – CONSTRUCT PRIMARY SHAFTS (LEAN CONCRETE)
N.T.S.

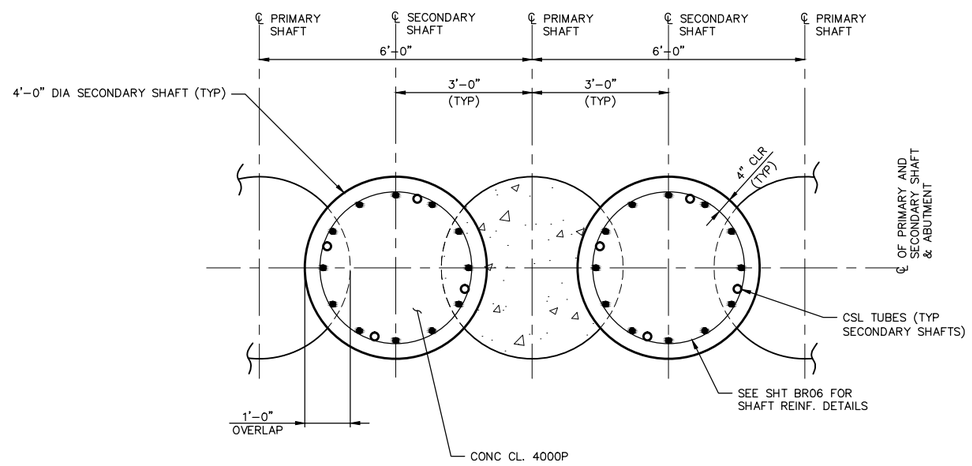

STEP 2 – CONSTRUCT SECONDARY SHAFTS (CONC CL4000P)
N.T.S.

SHAFT CONSTRUCTION SEQUENCE

NO.	DATE	BY	APPR.	REVISIONS

Approved By

TRANSPORTATION DESIGN MANAGER — DATE
M. ARAKELYAN
PROJECT MANAGER — DATE

R. RICHARDSON
DESIGNED BY — DATE
J. FRYE
DRAWN BY — DATE
D. KORPI
CHECKED BY — DATE

City of Bellevue
TRANSPORTATION DEPARTMENT

124th Ave NE - NE Spring Blvd to NE Ichigo Way

BRIDGE FOUNDATION
SHAFT CONSTRUCTION SEQUENCE

SHEET NAME BR05

SHT 168 OF 198

95% SUBMITTAL NOT FOR CONSTRUCTION

GENERAL NOTES:

1. FOR TOP & BOTTOM SHAFT ELEV. SEE SHEET BR04 FOR SHAFT SCHEDULE.

NXX
BAR MARK
ABUTMENT 1 OR 2

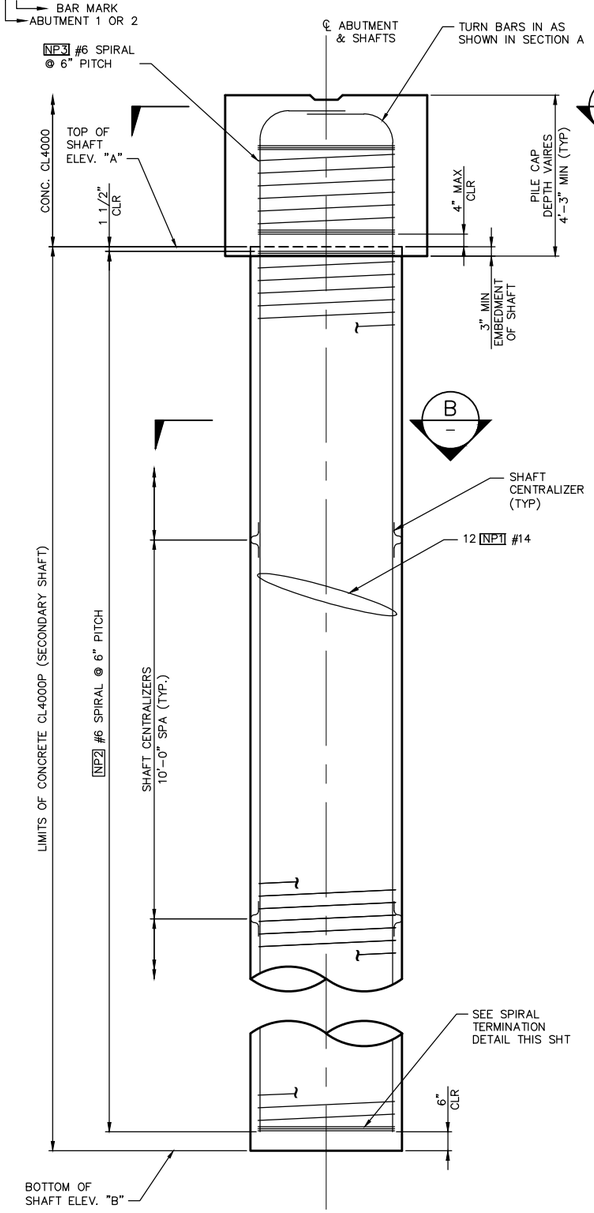

ELEVATION – SECONDARY SHAFT TYPE 1
N.T.S.

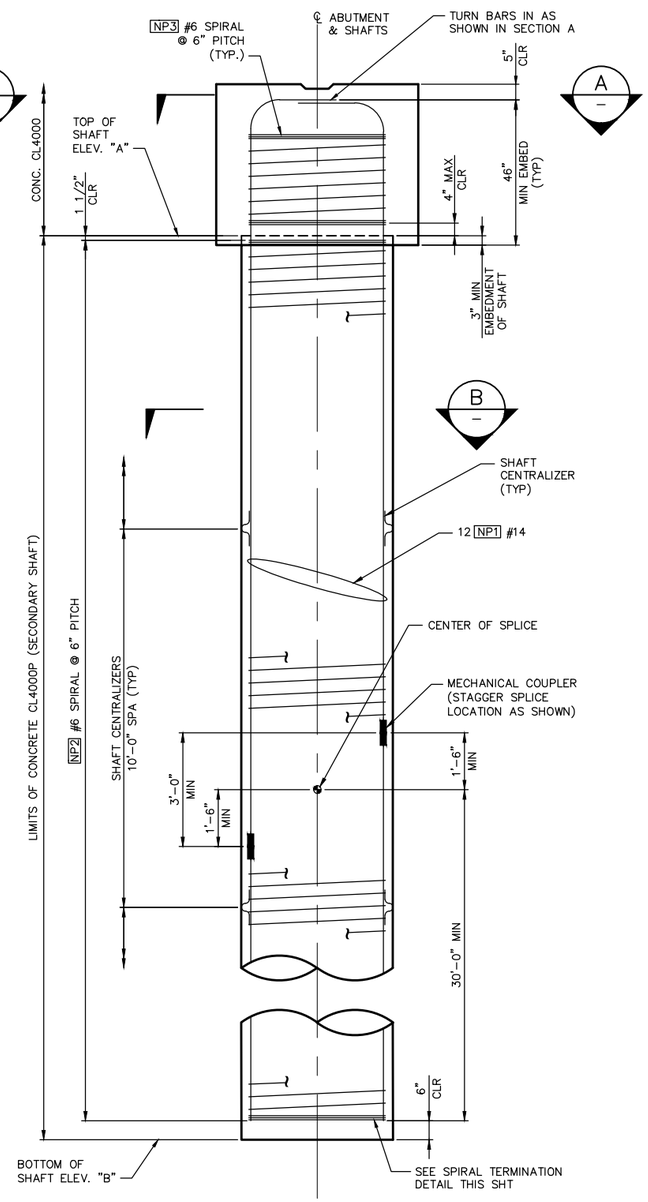

ELEVATION – SECONDARY SHAFT TYPE 2
N.T.S.

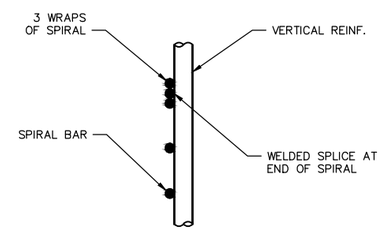

SPIRAL TERMINATION DETAIL
N.T.S.

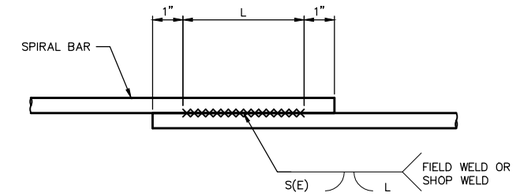

SPIRAL WELDED LAP SPLICE DETAIL
N.T.S.
SEE TABLE FOR WELD DIMENSIONS

	WELD DIMENSIONS (INCHES)		
BAR SIZE	S	E	LENGTH (L)
#6	3/8	3/16	6"

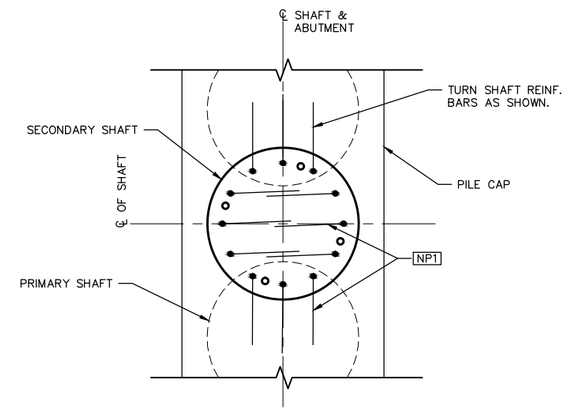

SECTION A
N.T.S.
(PILE CAP REINF. NOT SHOWN FOR CLARITY)

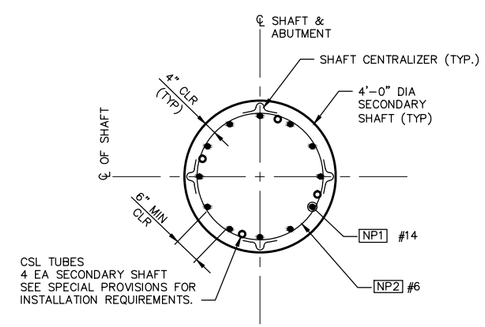

SECTION B
N.T.S.

SECONDARY SHAFT BAR LIST				
MARK	SIZE	QTY. (PER SHAFT)	LENGTH, L (OUT TO OUT)	TOTAL WEIGHT (LB PER SHAFT)
1P1	#14	12	VARIES PER SHAFT 48'-9" MIN 50'-2" MAX	VARIES PER SHAFT 4700 MIN 4800 MAX
1P2	#6	1	VARIES PER SHAFT 45'-1" MIN 46'-6" MAX	VARIES PER SHAFT 1400 MIN 1500 MAX
2P1	#14	12	VARIES PER SHAFT 47'-11" MIN 49'-6" MAX	VARIES PER SHAFT 4600 MIN 4800 MAX
2P2	#6	1	VARIES PER SHAFT 44'-2" MIN 45'-9" MAX	VARIES PER SHAFT 1400 MIN 1500 MAX
NP3	#6	1	3'-0"	93

WEIGHTS ARE PER SHAFT AND ARE OUT TO OUT DIMENSIONS. LENGTHS AND WEIGHT DO NOT INCLUDE WELDS, LAP SPLICES, MECHANICAL SPLICES OR ADDITIONAL TURNS AND TERMINATION LENGTHS.

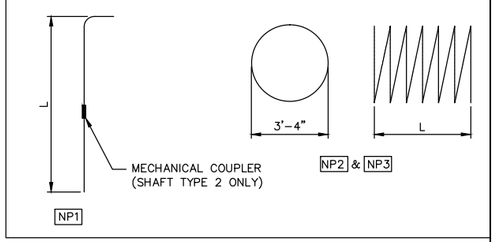

NO.	DATE	BY	APPR.	REVISIONS

Approved By
TRANSPORTATION DESIGN MANAGER — DATE
M. ARAKELYAN
PROJECT MANAGER — DATE

R. RICHARDSON — DESIGNED BY — DATE
J. FRYE — DRAWN BY — DATE
D. KORPI — CHECKED BY — DATE

City of Bellevue
TRANSPORTATION DEPARTMENT

124th Ave NE - NE Spring Blvd to NE Ichigo Way

BRIDGE FOUNDATION SHAFT DETAILS

SHEET NAME BR06

SHT 169 OF 198

GENERAL NOTES:
1. SEE SHEET BR03 FOR STAGED CONSTRUCTION DETAILS.

SECTION 28, T. 25 N., R5E., W.M.
KING COUNTY

95% SUBMITTAL NOT FOR CONSTRUCTION

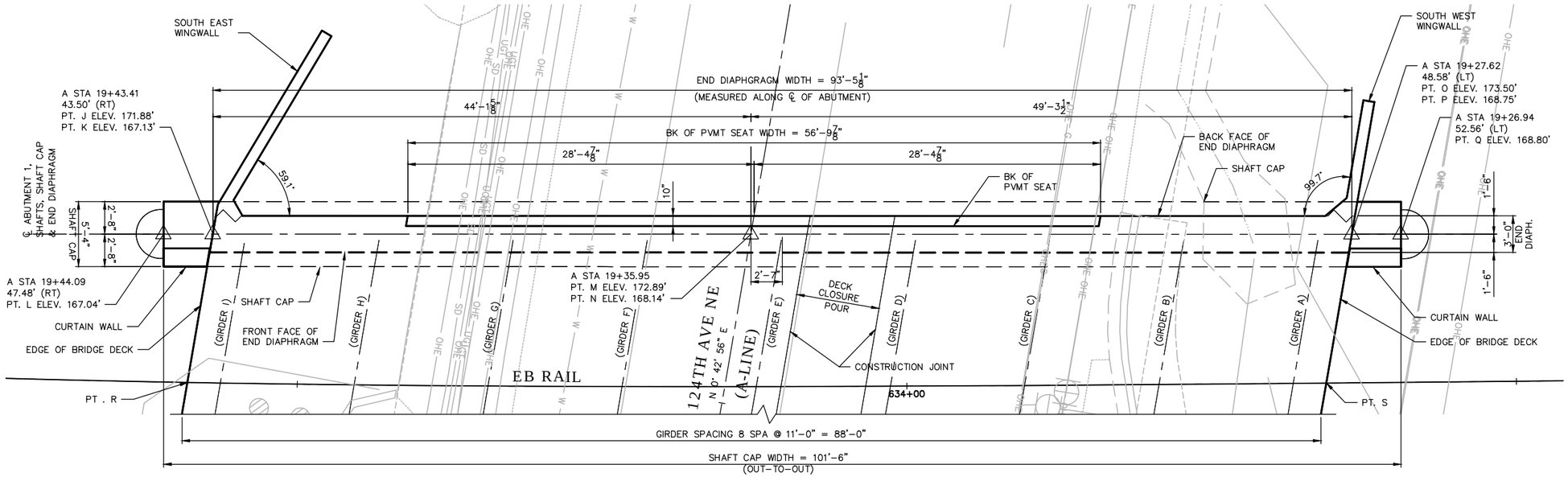

ABUTMENT 1 PLAN

BOTTOM OF GIRDER W.P. ELEVATION	
GIRDER	ELEV. (FT)
A	169.16
B	169.02
C	168.89
D	168.75
E	168.61
F	168.39
G	168.14
H	167.89
I	167.64

CENTER OF UTILITY W.P. ELEVATIONS	
LINE	ELEV. (FT)
A	170.26
B	171.00
C	170.40
D	170.00
E	169.90
F	169.15
G	169.50

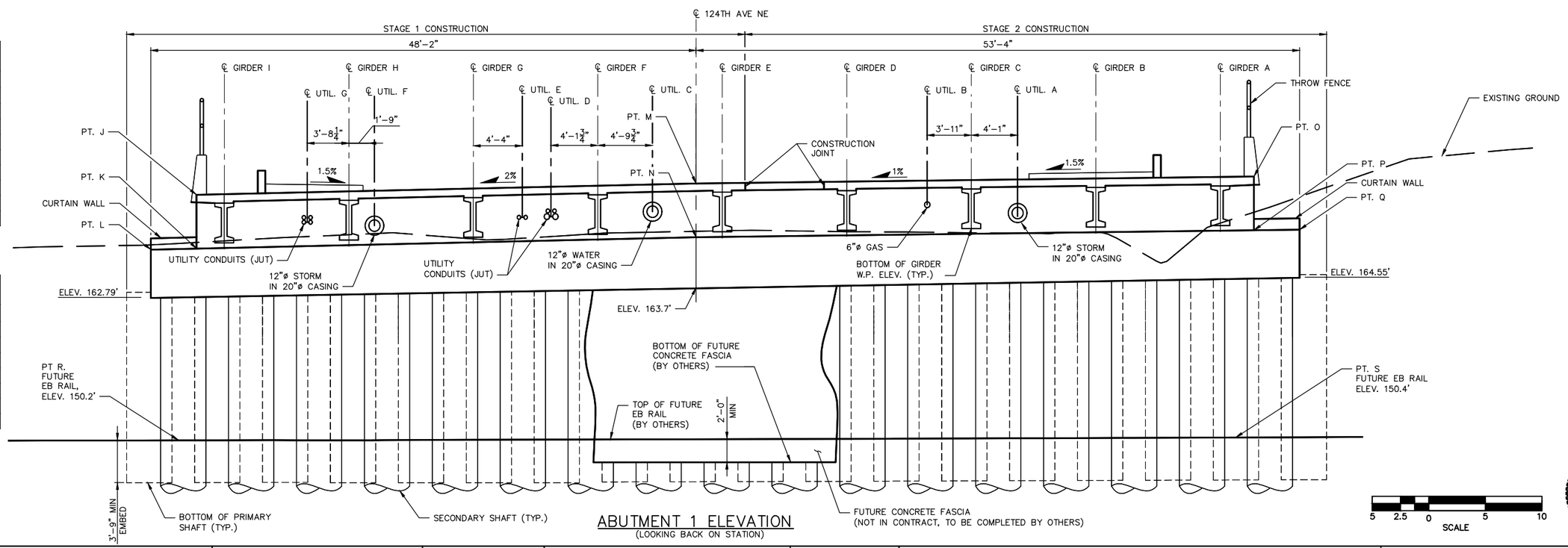

ABUTMENT 1 ELEVATION
(LOOKING BACK ON STATION)

5 2.5 0 5 10
SCALE

NO.	DATE	BY	APPR.	REVISIONS

Approved By

TRANSPORTATION DESIGN MANAGER — DATE
M. ARAKELYAN
PROJECT MANAGER — DATE

R. RICHARDSON — DESIGNED BY — DATE
J. FRYE — DRAWN BY — DATE
D. KORPI — CHECKED BY — DATE

City of Bellevue
TRANSPORTATION DEPARTMENT

HDR

124th Ave NE - NE Spring Blvd to NE Ichigo Way

BRIDGE - ABUTMENT 1 PLAN AND ELEVATION

SHEET NAME BR07

SHT 170 OF 198

95% SUBMITTAL NOT FOR CONSTRUCTION

GENERAL NOTES:

1. SEE SHEET BR03 FOR STAGED CONSTRUCTION SEQUENCE & DETAILS.
2. UNLESS OTHERWISE SHOWN, MIN. LAP SPLICE LENGTHS SHALL BE AS:
   #5: 2'–6"
   #6: 2'–9"
3. UTILITIES SHOWN FOR REFERENCE ONLY.
4. T&B = TOP AND BOTTOM
5. SHAFTS NOT SHOWN FOR CLARITY.

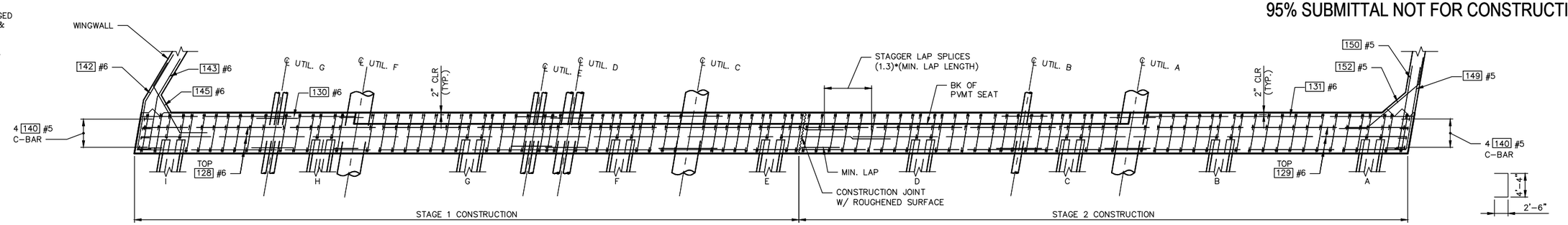

ABUTMENT 1 END DIAPHRAGM REINFORCEMENT PLAN

SCALE: ¼" = 1'–0"

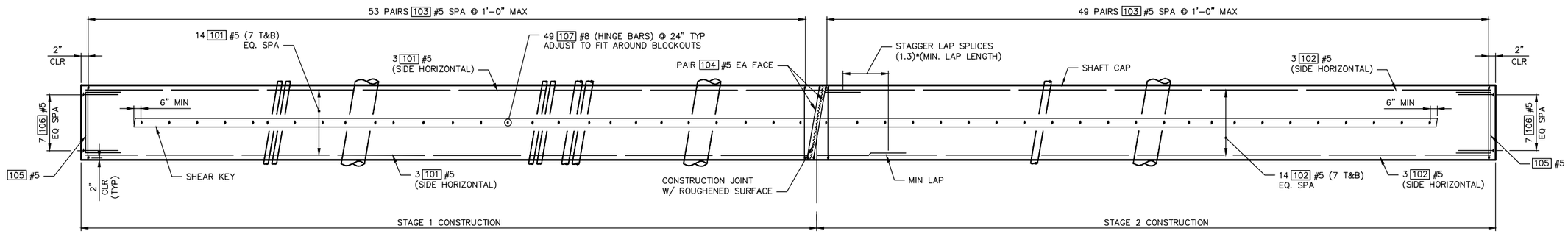

ABUTMENT 1 SHAFT CAP REINFORCEMENT PLAN

SCALE: ¼" = 1'–0"

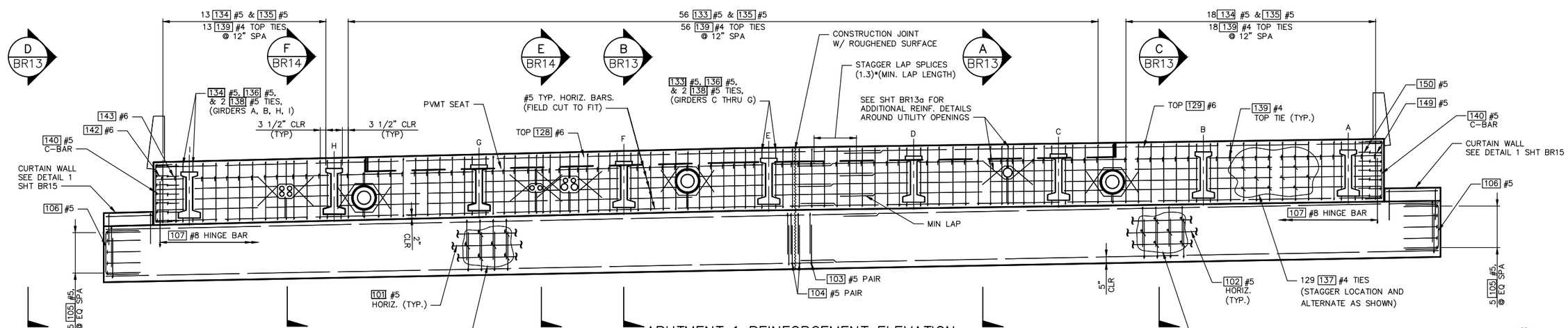

ABUTMENT 1 REINFORCEMENT ELEVATION

SCALE: ¼" = 1'–0"

(LOOKING BACK ON STATION)
(SHAFT, DECK, WINGWALL, AND BARRIER REINF. NOT SHOWN FOR CLARITY)

NO.	DATE	BY	APPR.	REVISIONS

Approved By

TRANSPORTATION DESIGN MANAGER — DATE
M. ARAKELYAN
PROJECT MANAGER — DATE

R. RICHARDSON
DESIGNED BY — DATE
J. FRYE
DRAWN BY — DATE
D. KORPI
CHECKED BY — DATE

City of Bellevue
TRANSPORTATION DEPARTMENT

HDR

124th Ave NE - NE Spring Blvd to NE Ichigo Way

BRIDGE - ABUTMENT 1 REINFORCEMENT LAYOUT

SHEET NAME BR08

SHT 171 OF 198

95% SUBMITTAL NOT FOR CONSTRUCTION

GENERAL NOTES:

1. UNLESS NOTED OTHERWISE, DIMENSIONS ARE IN FEET AND INCHES.
2. PLACE CONCRETE PEDESTRIAN BARRIER AFTER PLACING WINGWALL CONCRETE.
3. UNLESS OTHERWISE SHOWN, MIN LAP SPLICE LENGTHS SHALL BE AS:
   #5: 2'-6"
   #6: 2'-9"

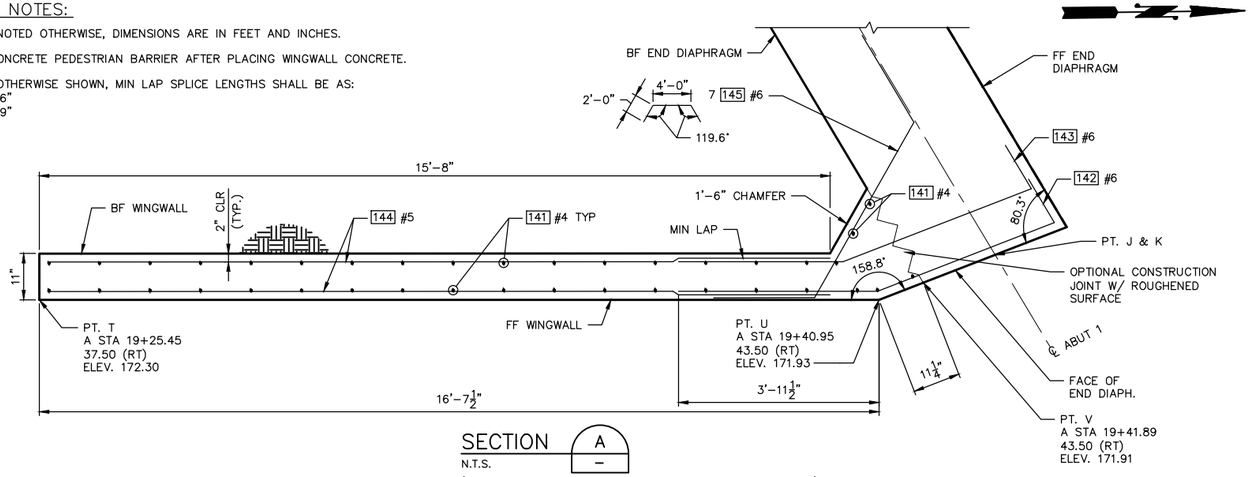

SECTION A
N.T.S.
(END DIAPHRAGM & BARRIER REINF. NOT SHOWN FOR CLARITY)

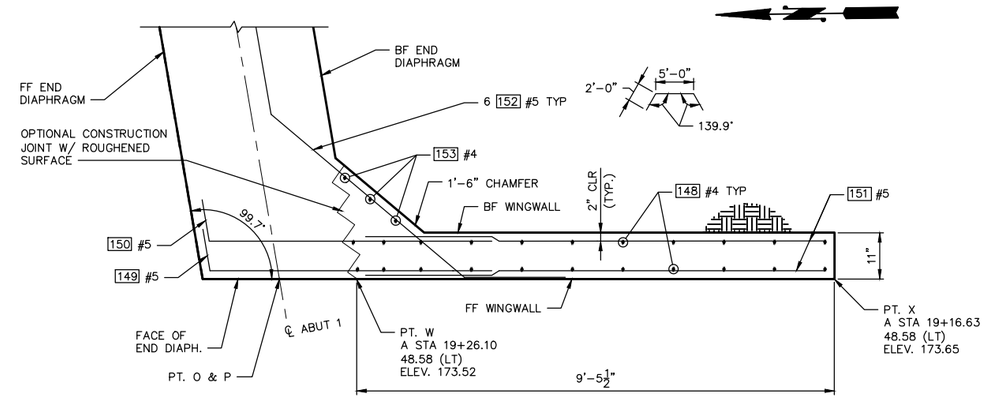

SECTION B
N.T.S.
(END DIAPHRAGM & BARRIER REINF. NOT SHOWN FOR CLARITY)

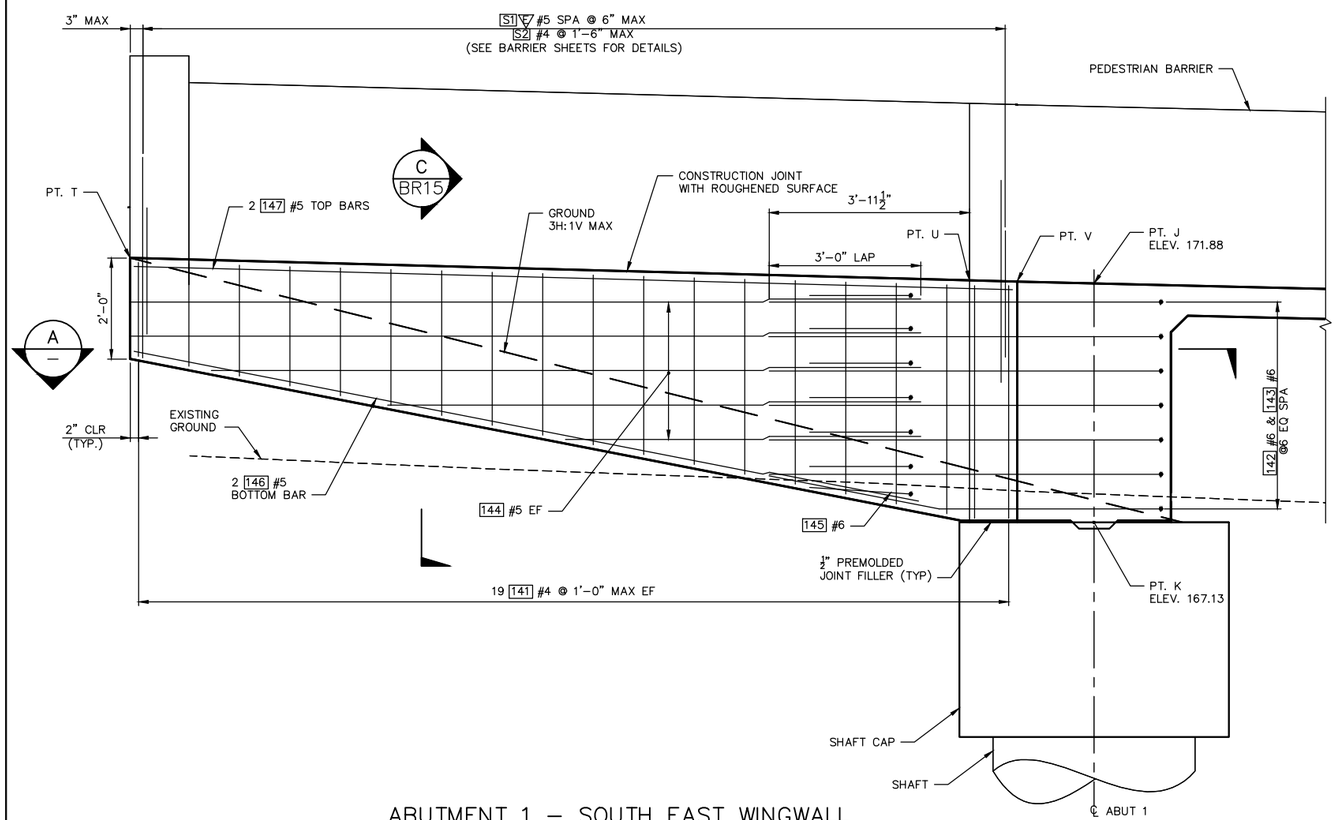

ABUTMENT 1 – SOUTH EAST WINGWALL DEVELOPED ELEVATION
N.T.S.
(NOT ALL REINF. SHOWN FOR CLARITY)

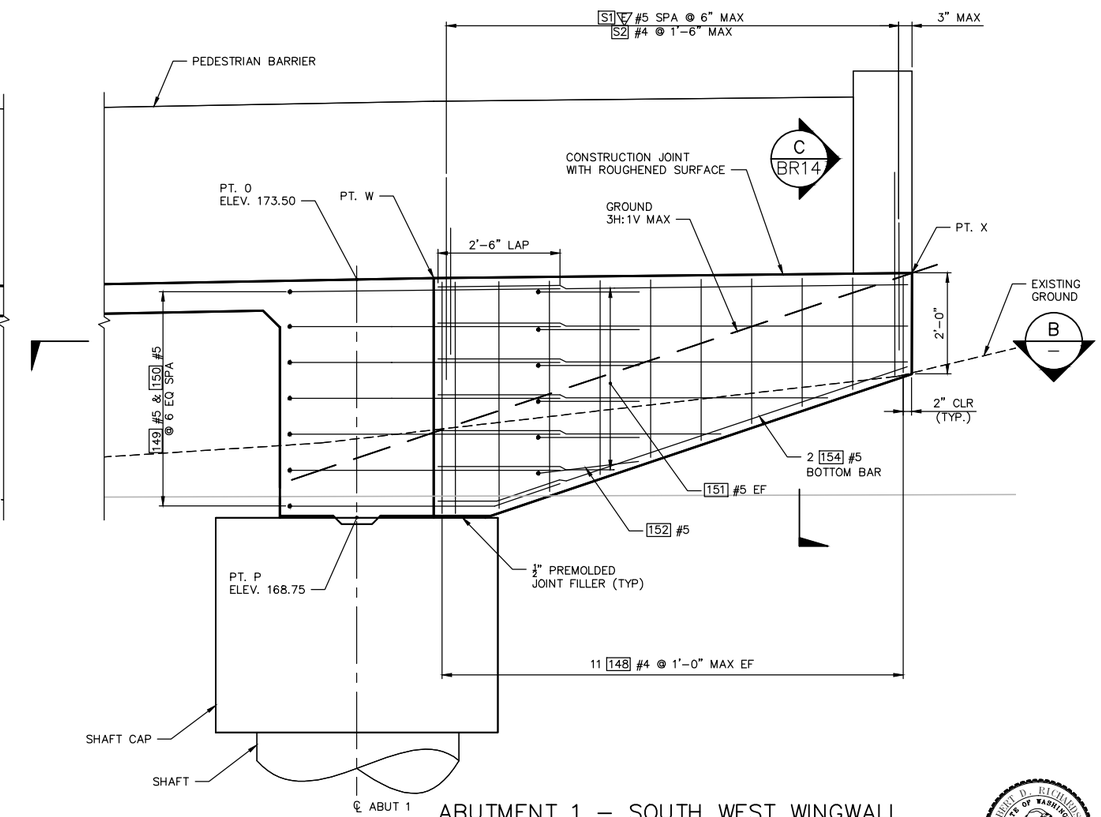

ABUTMENT 1 – SOUTH WEST WINGWALL DEVELOPED ELEVATION
N.T.S.
(NOT ALL REINF. SHOWN FOR CLARITY)

NO.	DATE	BY	APPR.	REVISIONS

Approved By
TRANSPORTATION DESIGN MANAGER — DATE
M. ARAKELYAN
PROJECT MANAGER — DATE

R. RICHARDSON
DESIGNED BY — DATE
J. FRYE
DRAWN BY — DATE
D. KORPI
CHECKED BY — DATE

City of Bellevue
TRANSPORTATION DEPARTMENT

124th Ave NE - NE Spring Blvd to NE Ichigo Way

BRIDGE - ABUTMENT 1
WINGWALL PLANS & ELEVATIONS

SHEET NAME BR09

GENERAL NOTES:

1. SEE SHEET BR03 FOR STAGED CONSTRUCTION DETAILS.
2. GIRDER W.P. ELEV. ARE AT ℄ OF GIRDER AND ℄ OF BEARING. SEE SHT BR13 FOR ℄ OF BEARING.
3. UTILITY ELEVATIONS ARE GIVEN AS CENTER OF PIPE.

SECTION 28, T. 25 N., R5E., W.M.
KING COUNTY

95% SUBMITTAL NOT FOR CONSTRUCTION

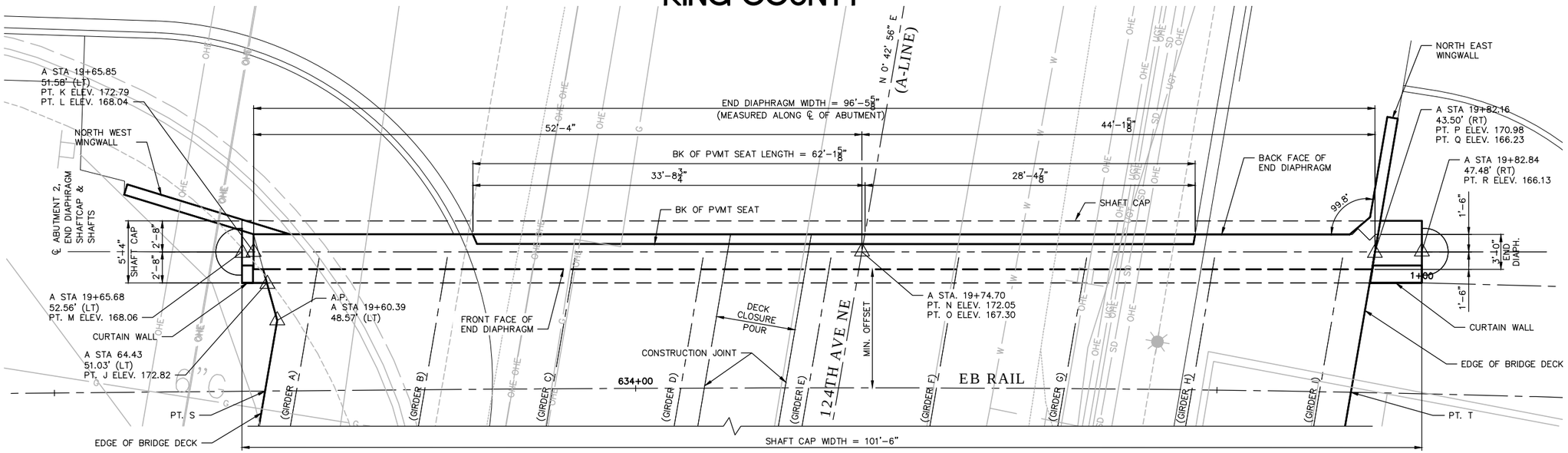

ABUTMENT 2 PLAN

BOTTOM OF GIRDER W.P. ELEVATION	
GIRDER	ELEV. (FT)
A	168.44
B	168.29
C	168.14
D	167.98
E	167.82
F	167.58
G	167.32
H	167.05
I	166.78

CENTER OF UTILITY W.P. ELEVATIONS	
LINE	ELEV. (FT)
A	169.57
B	170.20
C	169.60
D	169.10
E	169.10
F	168.55
G	168.10

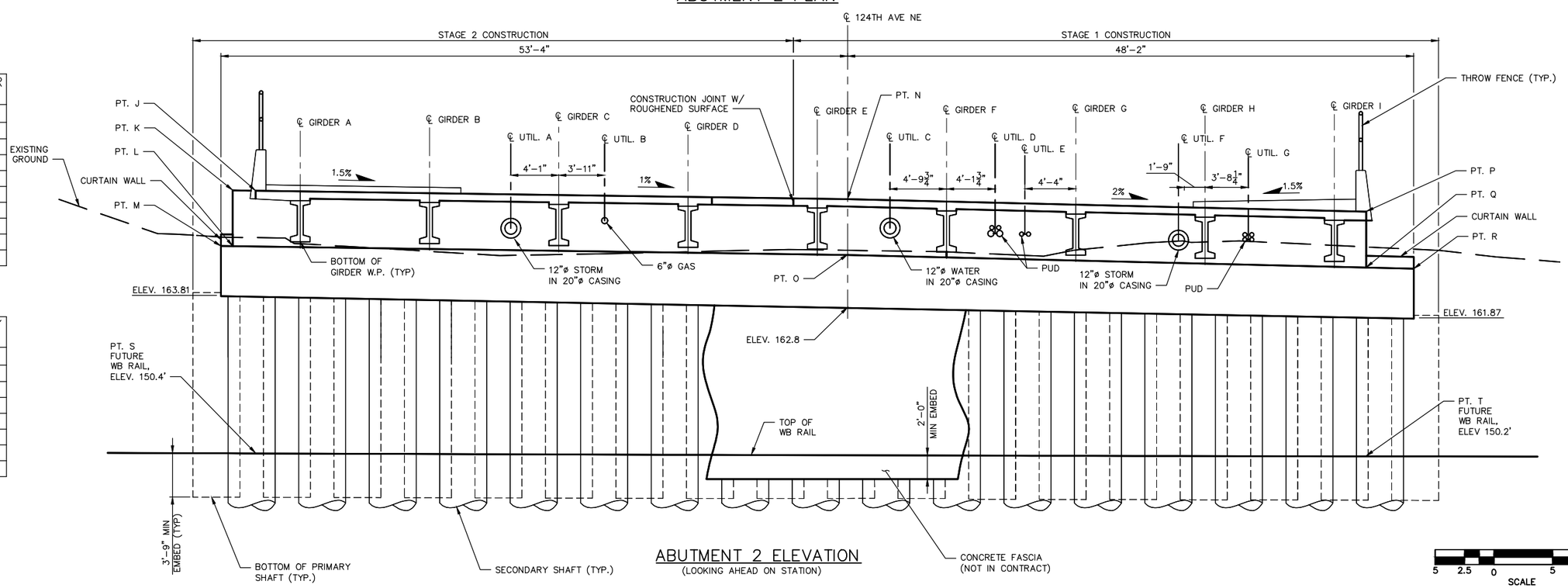

ABUTMENT 2 ELEVATION

(LOOKING AHEAD ON STATION)

5 2.5 0 5 10
SCALE

NO.	DATE	BY	APPR.	REVISIONS

Approved By

TRANSPORTATION DESIGN MANAGER — DATE
M. ARAKELYAN
PROJECT MANAGER — DATE

R. RICHARDSON — DESIGNED BY — DATE
J. FRYE — DRAWN BY — DATE
D. KORPI — CHECKED BY — DATE

City of Bellevue
TRANSPORTATION DEPARTMENT

HDR

124th Ave NE - NE Spring Blvd to NE Ichigo Way

BRIDGE - ABUTMENT 2 PLAN AND ELEVATION

SHEET NAME BR10

SHT 173 OF 198

95% SUBMITTAL NOT FOR CONSTRUCTION

GENERAL NOTES:

1. SEE SHEET BR03 FOR STAGED CONSTRUCTION SEQUENCE & DETAILS.
2. UNLESS OTHERWISE SHOWN, MIN. LAP SPLICE LENGTHS SHALL BE AS:
   #5: 2'–6"
   #6: 2'–9"
3. UTILITIES SHOWN FOR REFERENCE ONLY. SEE ABUTMENT PLAN & ELEV. FOR DETAILS.
4. T&B = TOP AND BOTTOM

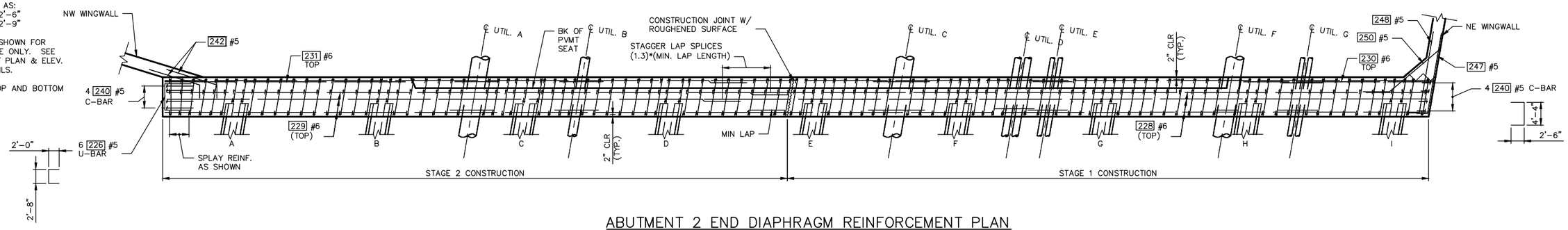

ABUTMENT 2 END DIAPHRAGM REINFORCEMENT PLAN

SCALE: ¼" = 1'–0"

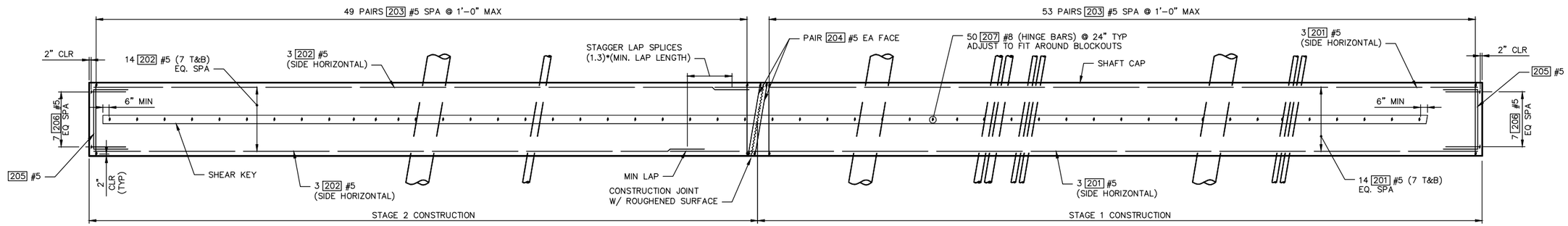

ABUTMENT 2 SHAFT CAP REINFORCEMENT PLAN

SCALE: ¼" = 1'–0"

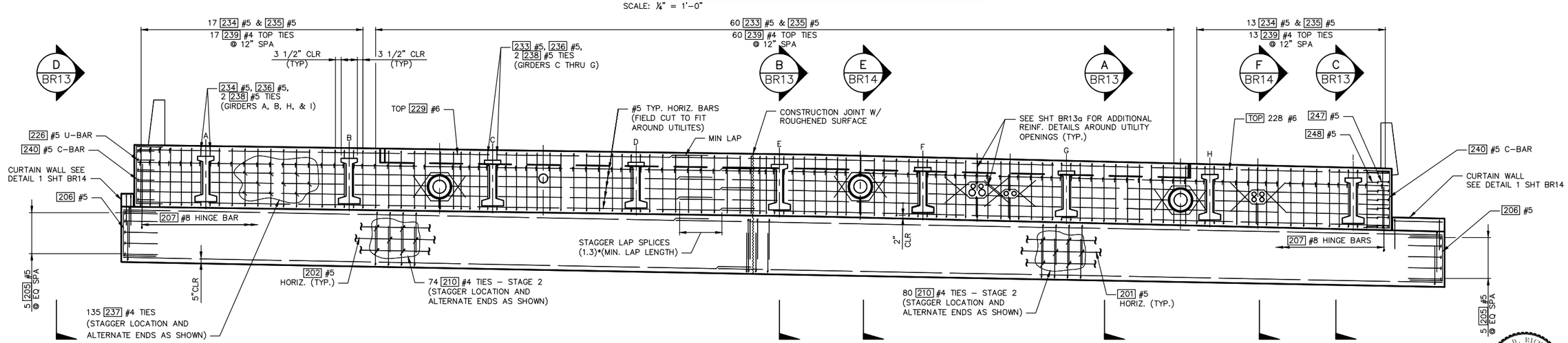

ABUTMENT 2 REINFORCEMENT ELEVATION

SCALE: ¼" = 1'–0"

(LOOKING AHEAD ON STATION)
(SHAFT, DECK, WINGWALL, AND BARRIER REINF. NOT SHOWN FOR CLARITY)

NO.	DATE	BY	APPR.	REVISIONS

Approved By

TRANSPORTATION DESIGN MANAGER — DATE
M. ARAKELYAN
PROJECT MANAGER — DATE

R. RICHARDSON — DESIGNED BY — DATE
J. FRYE — DRAWN BY — DATE
D. KORPI — CHECKED BY — DATE

City of Bellevue
TRANSPORTATION DEPARTMENT

124th Ave NE - NE Spring Blvd to NE Ichigo Way

BRIDGE - ABUTMENT 2 REINFORCEMENT LAYOUT

SHEET NAME BR11

GENERAL NOTES:

1. UNLESS NOTED OTHERWISE, DIMENSIONS ARE IN FEET AND INCHES.
2. PLACE CONCRETE PEDESTRIAN BARRIER AFTER PLACING WINGWALL CONCRETE.
3. UNLESS OTHERWISE SHOWN, MIN LAP SPLICE LENGTHS SHALL BE AS:
   #5: 2'-6"

95% SUBMITTAL NOT FOR CONSTRUCTION

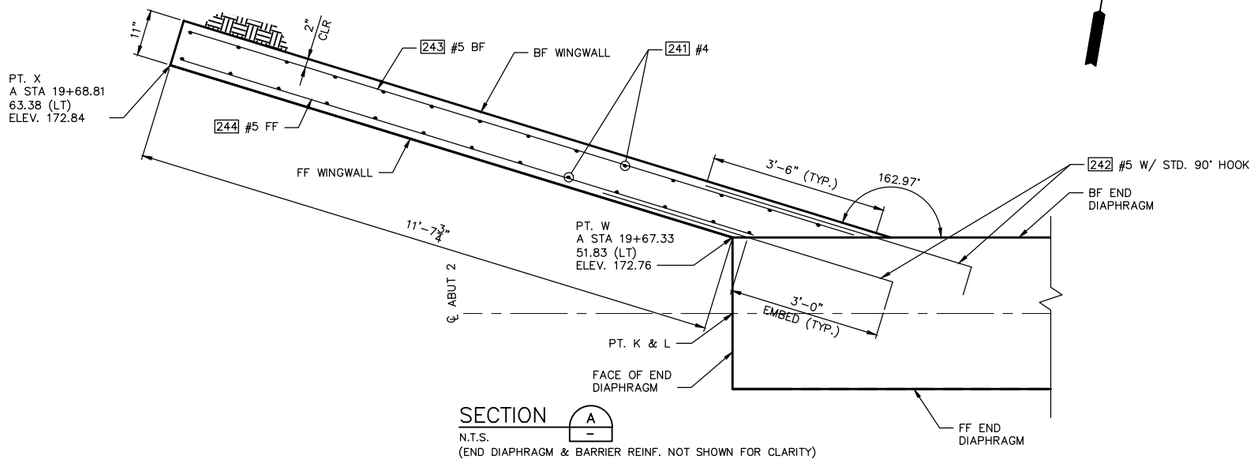

SECTION A
N.T.S.
(END DIAPHRAGM & BARRIER REINF. NOT SHOWN FOR CLARITY)

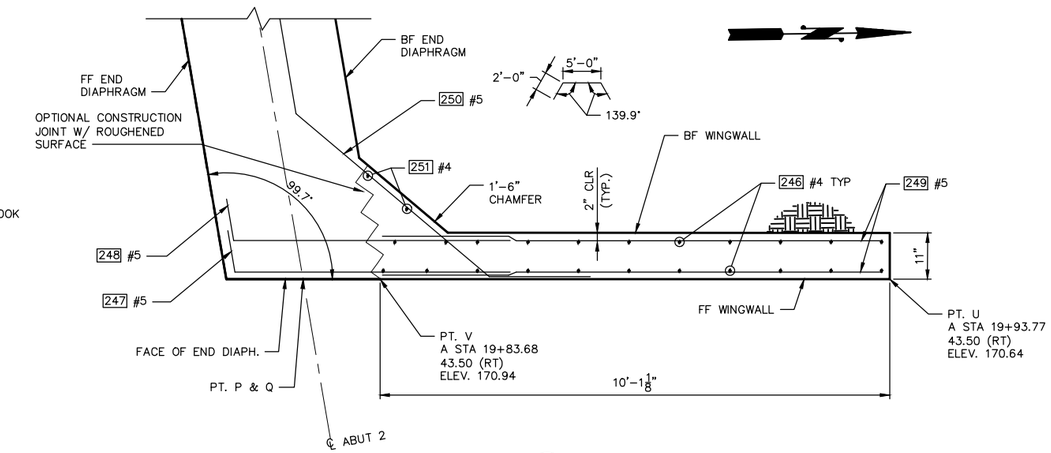

SECTION B
N.T.S.
(END DIAPHRAGM & BARRIER REINF. NOT SHOWN FOR CLARITY)

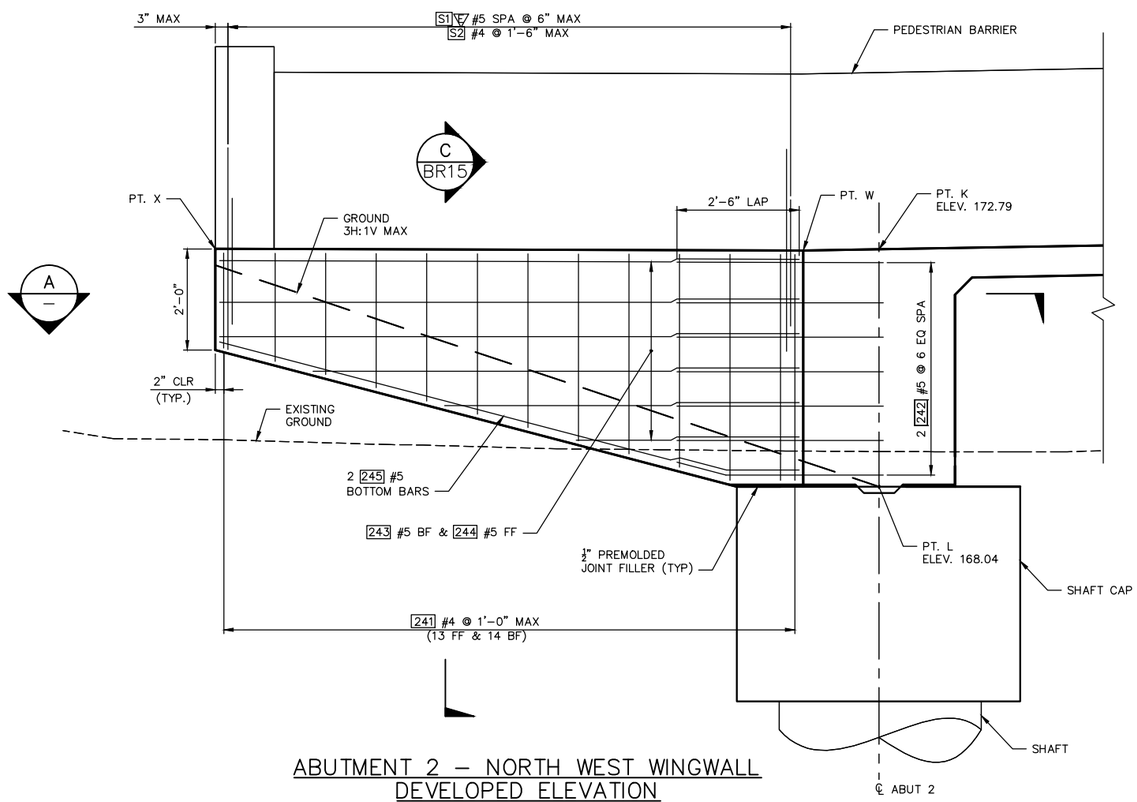

ABUTMENT 2 – NORTH WEST WINGWALL DEVELOPED ELEVATION
N.T.S.
(NOT ALL REINF. SHOWN FOR CLARITY)

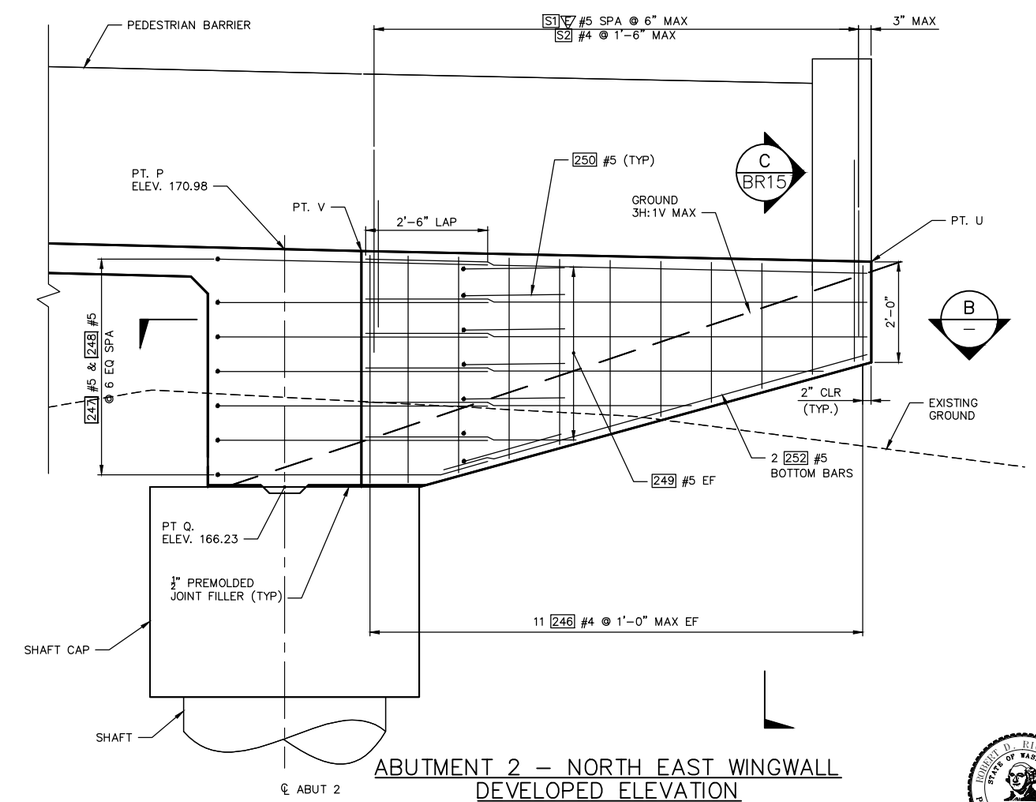

ABUTMENT 2 – NORTH EAST WINGWALL DEVELOPED ELEVATION
N.T.S.
(NOT ALL REINF. SHOWN FOR CLARITY)

NO.	DATE	BY	APPR.	REVISIONS

Approved By
TRANSPORTATION DESIGN MANAGER — DATE
M. ARAKELYAN
PROJECT MANAGER — DATE

R. RICHARDSON
DESIGNED BY — DATE
J. FRYE
DRAWN BY — DATE
D. KORPI
CHECKED BY — DATE

City of Bellevue
TRANSPORTATION DEPARTMENT

124th Ave NE - NE Spring Blvd to NE Ichigo Way

BRIDGE - ABUTMENT 2
WINGWALL PLANS & ELEVATIONS

SHEET NAME BR12

SHT 175 OF 198

95% SUBMITTAL NOT FOR CONSTRUCTION

GENERAL NOTES:

1. GIRDERS SHALL BE HELD RIGIDLY IN PLACE UNTIL DECK AND END DIAPHRAGM IS PLACED.
2. EXTENDED STRANDS AND GIRDER REINFORCEMENT NOT SHOWN FOR CLARITY.
3. SHAFT REINFORCING NOT SHOWN FOR CLARITY.
4. HORIZONTAL DIMENSIONS ARE NORMAL TO CENTERLINE OF ABUTMENT.
5. FOR CONCRETE PLACEMENT PROCEDURE SEE "BRIDGE CONSTRUCTION SEQUENCE" SHEET BR02.

LEGEND:

UTILITY LAYOUT LINE (IF USED)

N00X — BAR MARK; ABUTMENT 1 OR 2

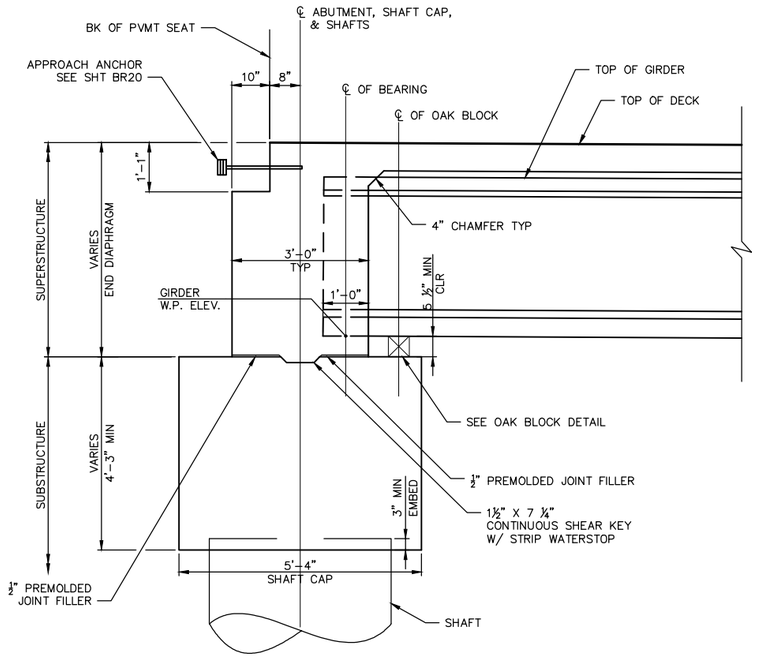

ABUTMENT TYPICAL SECTION

NOT TO SCALE

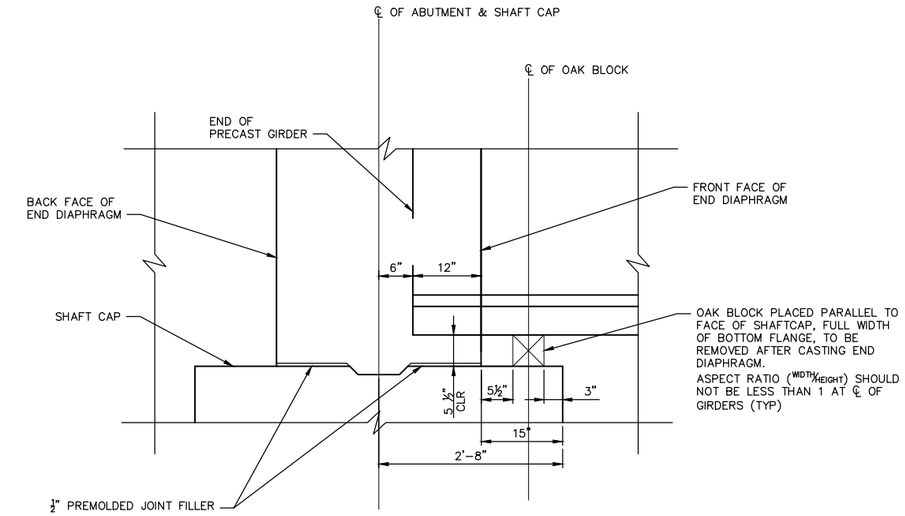

OAK BLOCK DETAIL

NOT TO SCALE

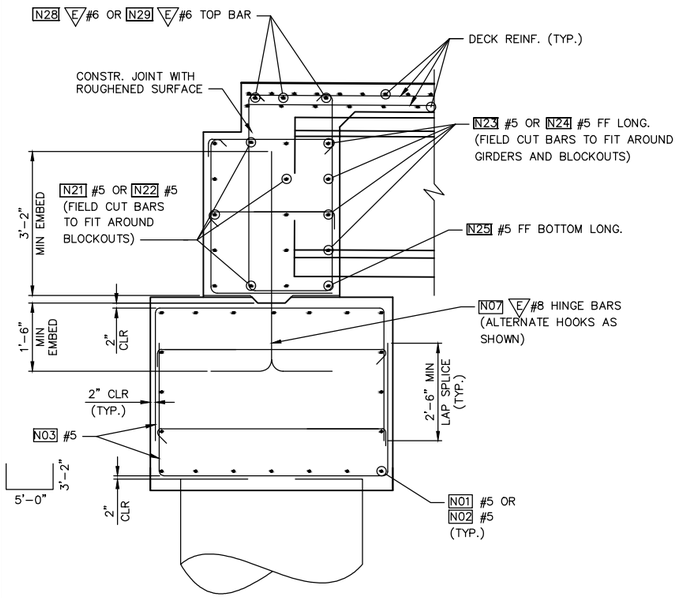

SECTION A

N.T.S.
(TYP BTWN GIRDERS)

BR08, BR11

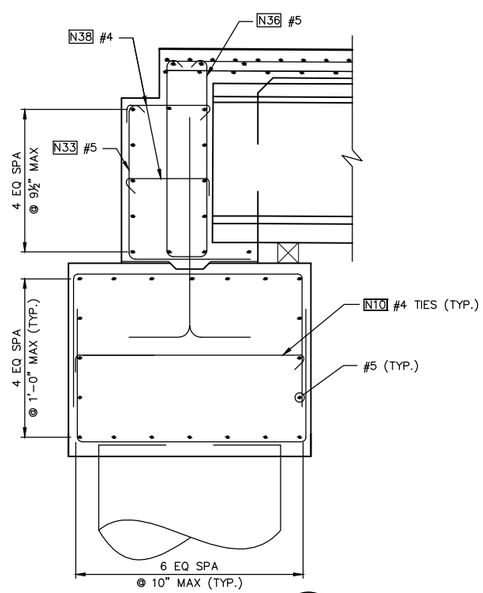

SECTION B

N.T.S.
(TYP AT GIRDER)

BR08, BR11

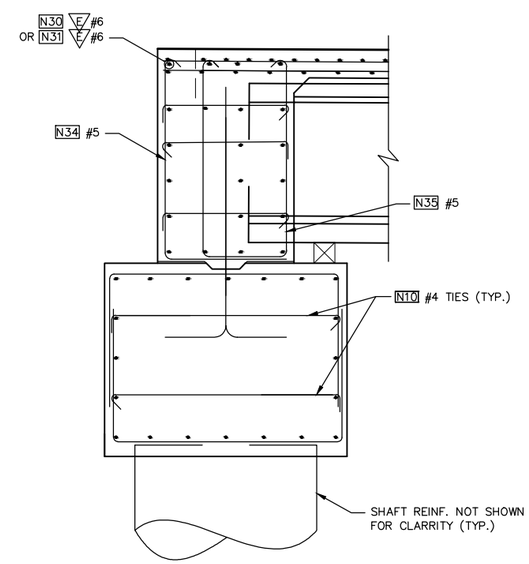

SECTION C

N.T.S.
(TYP AT SECTION W/OUT PVMT SEAT)

BR08, BR11

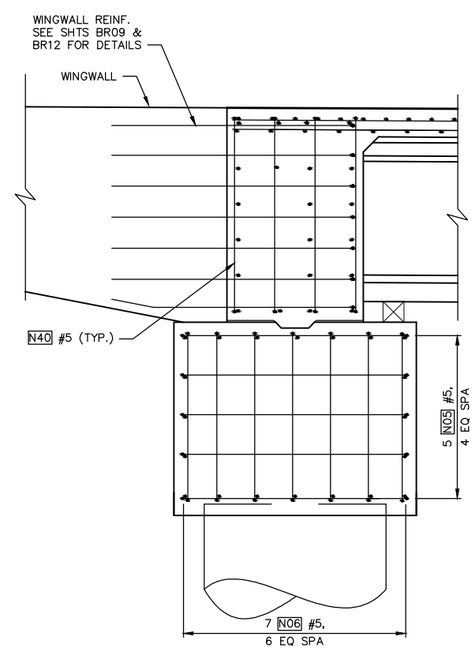

END VIEW

N.T.S.
(NOT ALL REINF. SHOWN FOR CLARITY)

BR08, BR11

NO.	DATE	BY	APPR.	REVISIONS

Approved By

TRANSPORTATION DESIGN MANAGER — DATE
M. ARAKELYAN
PROJECT MANAGER — DATE

R. RICHARDSON — DESIGNED BY — DATE
J. FRYE — DRAWN BY — DATE
D. KORPI — CHECKED BY — DATE

City of Bellevue
TRANSPORTATION DEPARTMENT

HDR

124th Ave NE - NE Spring Blvd to NE Ichigo Way

BRIDGE - ABUTMENTS 1 & 2 DETAILS

SHEET NAME BR13

SHT 176 OF 198

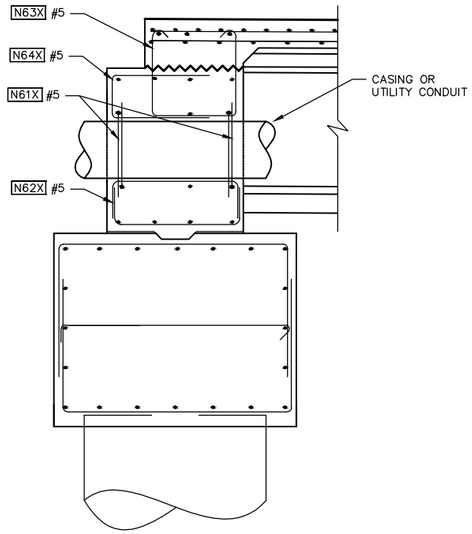

SECTION E
N.T.S.
(@ AT UTILITY BLOCKOUT
W/ PVMT SEAT)
BR08, BR11

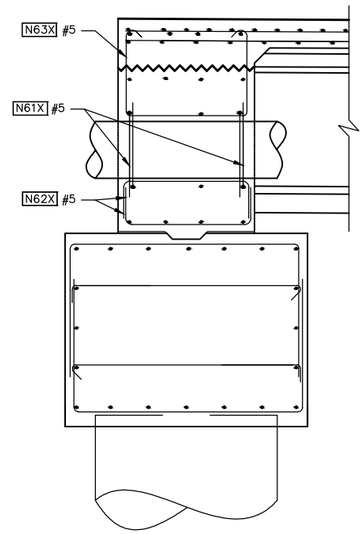

SECTION F
N.T.S.
(@ AT UTILITY BLOCKOUT
W/OUT PVMT SEAT)
BR08, BR11

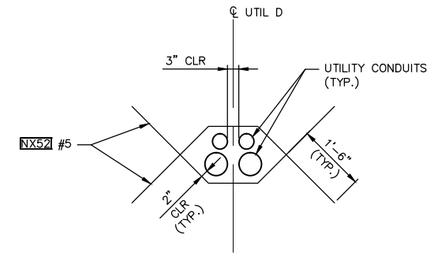

UTILITY BLOCKOUT
REINF. DETAIL 1 –
N.T.S.
(UTILITY LINE D SHOWN.
UTILITY LINE E & I SIMILAR)

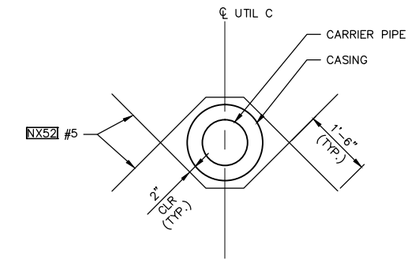

UTILITY BLOCKOUT DETAIL 2 –
N.T.S.

(UTILITY LINE C SHOWN. UTILITY LINE A, AND F SIMILAR.
SEE CITY OF BELLEVUE STANDARD DRAWING D-56 FOR
ADDITIONAL CASING DETAILS)

ABUTMENT 1 – UTILITY BLOCKOUT BAR LIST

MARK	SIZE	DIM "U"	DIM 'X'	DIM 'W'	DIM 'α'
161A	#5	10"	2'-11"	2'-11"	135°
161B	#5	6"	2'-2"	2'-2"	130°
161C	#5	10"	3'-1"	3'-1"	130°
161D	#5	1'-1"	2'-6"	2'-6"	130°
161E	#5	9"	2'-1"	2'-1"	130°
161F	#5	1'-6"	3'-1"	3'-1"	130°
161G	#5	11"	2'-4"	2'-4"	135°
162A	#5	2'-8 1/2"	6"	6"	–
162B	#5	2'-8 1/2"	1'-11 3/4"	1'-11 3/4"	–
162C	#5	2'-8 1/2"	1'-1 3/4"	1'-1 3/4"	–
162D	#5	2'-8 1/2"	1'-5 3/4"	1'-5 3/4"	–
162E	#5	2'-8 1/2"	1'-7"	1'-7"	–
162F	#5	2'-8 1/2"	1'-2 3/4"	1'-2 3/4"	–
162G	#5	2'-8 1/2"	1'-7"	1'-7"	–
163A	#5	2'-8 1/2"	1'-9 1/4"	1'-9 1/4"	–
163B	#5	1'-10 1/2"	1'-5 1/2"	1'-5 1/2"	–
163C	#5	1'-10 1/2"	1'-1 1/2"	1'-1 1/2"	–
163D	#5	1'-10 1/2"	1'-11 1/2"	1'-11 1/2"	–
163E	#5	1'-10 1/2"	2'-1/2"	2'-1/2"	–
163F	#5	1'-10 1/2"	1'-3/4"	1'-3/4"	–
163G	#5	2'-8 1/2"	2'-1/2"	2'-1/2"	–
164A	–	–	–	–	–
164B	#5	6"	1'-11 1/2"	1'-11 1/2"	–
164C	–	–	–	–	–
164D	#5	1'-0"	1'-11 1/2"	1'-11 1/2"	–
164E	#5	1'-3/4"	1'-11 1/2"	1'-11 1/2"	–
164F	–	–	–	–	–
164G	–	–	–	–	–

ABUTMENT 2 – UTILITY BLOCKOUT BAR LIST

MARK	SIZE	DIM "U"	DIM 'X'	DIM 'W'	DIM 'α'
261A	#5	10"	2'-11"	2'-11"	135°
261B	#5	6"	2'-2"	2'-2"	130°
261C	#5	10"	3'-1"	3'-1"	130°
261D	#5	1'-1"	2'-6"	2'-6"	130°
261E	#5	9"	2'-1"	2'-1"	130°
261F	#5	1'-6"	3'-1"	3'-1"	130°
261G	#5	11"	2'-4"	2'-4"	135°
262A	#5	2'-8 1/2"	1'-2 1/2"	1'-2 1/2"	–
262B	#5	2'-8 1/2"	2'-1/4"	2'-1/4"	–
262C	#5	2'-8 1/2"	1'-2 1/4"	1'-2 1/4"	–
262D	#5	2'-8 1/2"	1'-6 1/4"	1'-6 1/4"	–
262E	#5	2'-8 1/2"	1'-7 1/4"	1'-7 1/4"	–
262F	#5	2'-8 1/2"	8 3/4"	8 3/4"	–
262G	#5	2'-8 1/2"	1'-7 1/4"	1'-7 1/4"	–
263A	#5	2'-8 1/2"	1'-3/4"	1'-3/4"	–
263B	#5	1'-10 1/2"	1'-5 1/4"	1'-5 1/4"	–
263C	#5	1'-10 1/2"	1'-1 1/4"	1'-1 1/4"	–
263D	#5	1'-10 1/2"	1'-11 1/4"	1'-11 1/4"	–
263E	#5	1'-10 1/2"	2'-1/4"	2'-1/4"	–
263F	#5	1'-10 1/2"	1'-6 3/4"	1'-6 3/4"	–
263G	#5	2'-8 1/2"	2'-1/4"	2'-1/4"	–
264A	–	–	–	–	–
264B	#5	5 1/2"	1'-11 1/2"	1'-11 1/2"	–
264C	–	–	–	–	–
264D	#5	11 1/2"	1'-11 1/2"	1'-11 1/2"	–
264E	#5	1'-1/2"	1'-11 1/2"	1'-11 1/2"	–
264F	#5	7"	1'-11 1/2"	1'-11 1/2"	–
264G	–	–	–	–	–

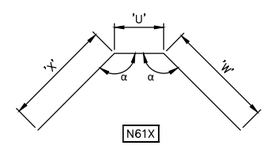

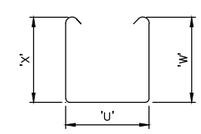

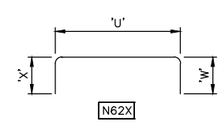

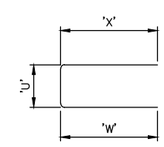

NO.	DATE	BY	APPR.	REVISIONS

Approved By
TRANSPORTATION DESIGN MANAGER DATE
M. ARAKELYAN
PROJECT MANAGER DATE

R. RICHARDSON
DESIGNED BY DATE
J. FRYE
DRAWN BY DATE
D. KORPI
CHECKED BY DATE

City of Bellevue
TRANSPORTATION DEPARTMENT

124th Ave NE - NE Spring Blvd to NE Ichigo Way

BRIDGE - ABUTMENTS 1 & 2
DETAILS CONTINUED

SHEET NAME BR14

95% SUBMITTAL NOT FOR CONSTRUCTION

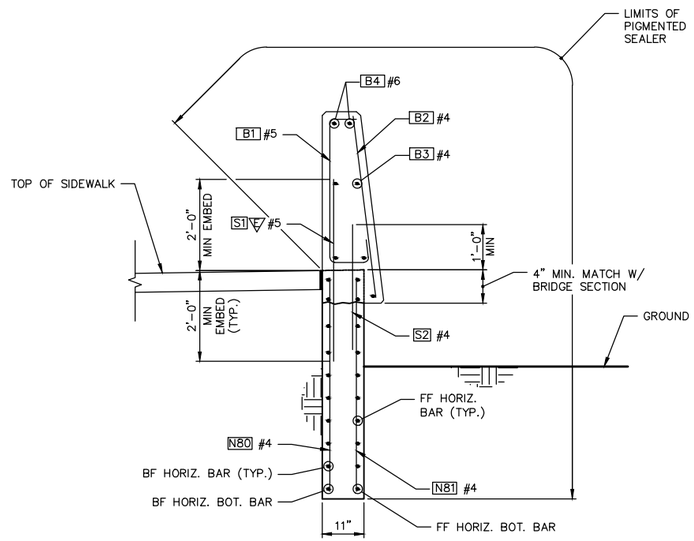

WINGWALL SECTION C

N.T.S.

BR09, BR12

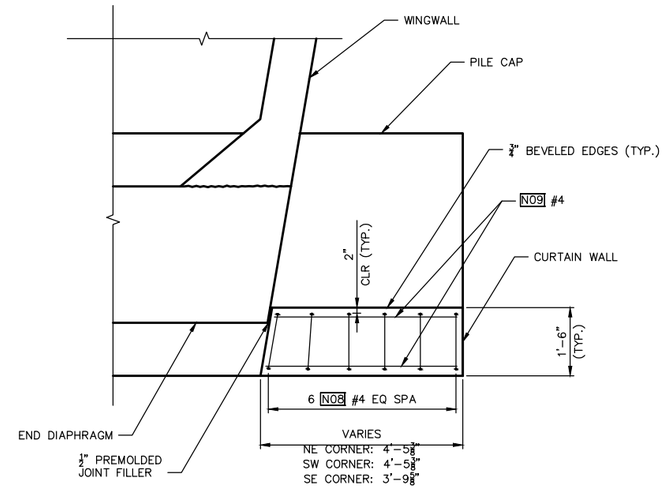

PLAN VIEW

(NORTH EAST CORNER SHOWN, SOUTH WEST AND SOUTH EAST CORNERS SIMILAR)

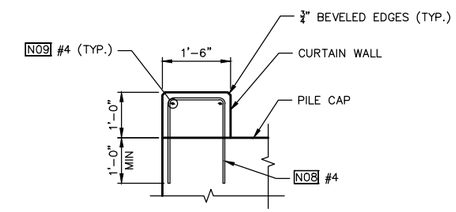

END VIEW

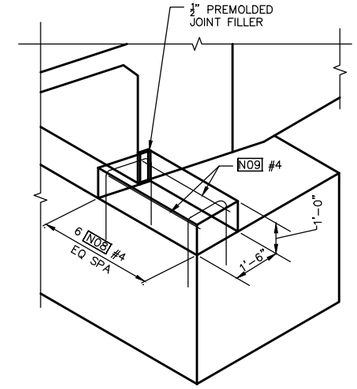

ISOMETRIC VIEW

(NORTH EAST CORNER SHOWN, SOUTH EAST & SOUTH WEST CORNERS SIMILAR)

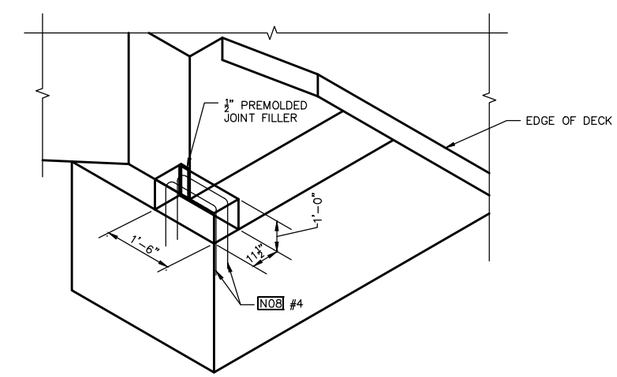

ISOMETRIC VIEW

(NORTH WEST CORNER)

CURTAIN WALL DETAIL 1 –

N.T.S.

NO.	DATE	BY	APPR.	REVISIONS

Approved By

TRANSPORTATION DESIGN MANAGER — DATE
M. ARAKELYAN
PROJECT MANAGER — DATE

R. RICHARDSON — DESIGNED BY — DATE
J. FRYE — DRAWN BY — DATE
D. KORPI — CHECKED BY — DATE

City of Bellevue
TRANSPORTATION DEPARTMENT

HDR

124th Ave NE - NE Spring Blvd to NE Ichigo Way

BRIDGE - ABUTMENTS 1 & 2 DETAILS

SHEET NAME BR15

SHT 178 OF 198

GENERAL NOTES:

1. UNLESS OTHERWISE NOTED, ALL DIMENSIONS ARE IN FEET AND INCHES.
2. SEE SHT BR31 FOR UTILITY HANGER DETAILS.

95% SUBMITTAL NOT FOR CONSTRUCTION

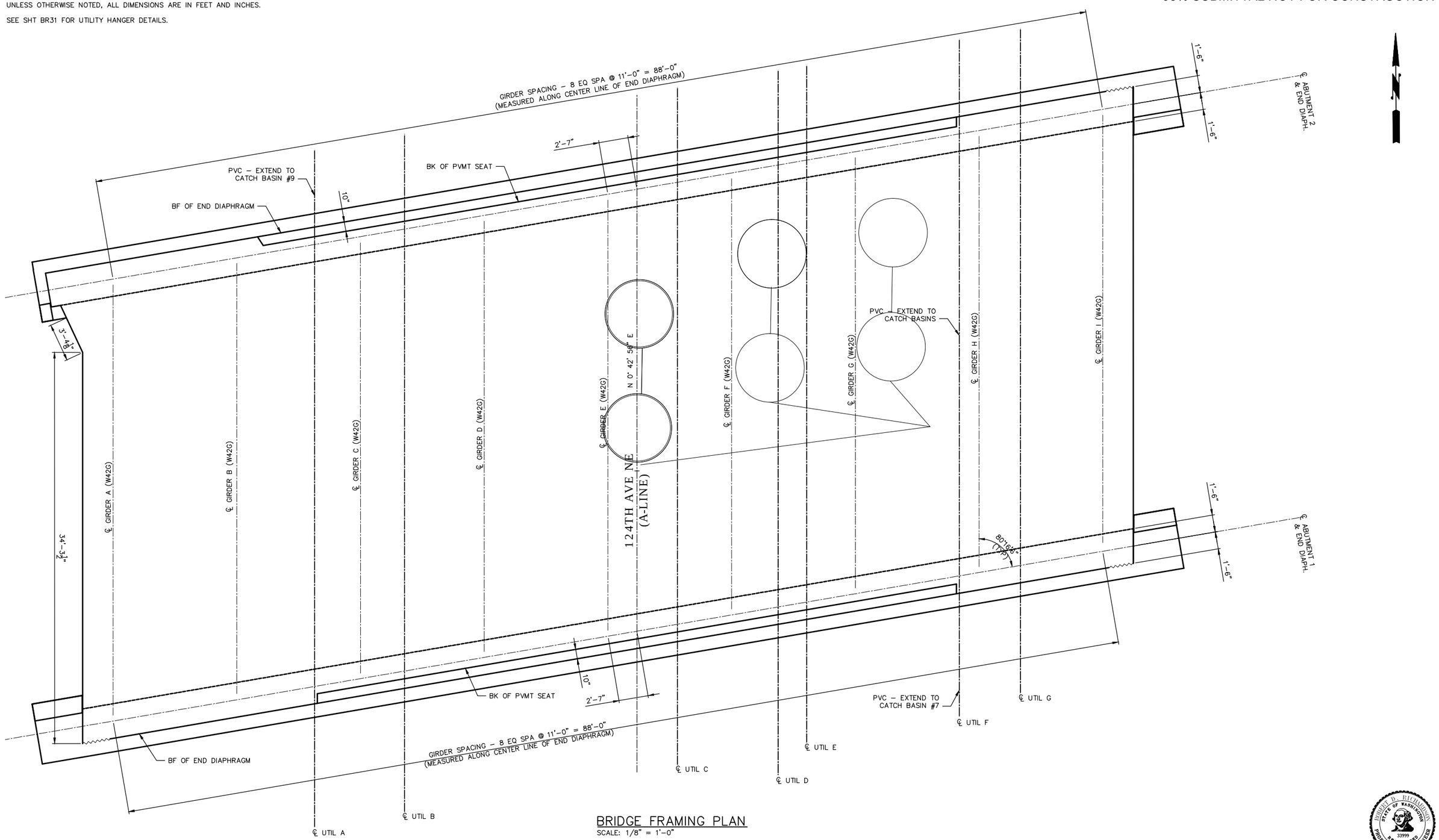

BRIDGE FRAMING PLAN
SCALE: 1/8" = 1'–0"

NO.	DATE	BY	APPR.	REVISIONS

Approved By

TRANSPORTATION DESIGN MANAGER — DATE
M. ARAKELYAN
PROJECT MANAGER — DATE

R. RICHARDSON — DESIGNED BY — DATE
J. FRYE — DRAWN BY — DATE
D. KORPI — CHECKED BY — DATE

City of Bellevue
TRANSPORTATION DEPARTMENT

HDR

124th Ave NE - NE Spring Blvd to NE Ichigo Way

BRIDGE FRAMING PLAN

SHEET NAME BR16

SHT 179 OF 198

GENERAL NOTES:

1. UNLESS OTHERWISE NOTED, ALL DIMENSIONS ARE IN FEET AND INCHES.
2. SEE SHT BR03 FOR STAGE CONSTRUCTION SEQUENCE

95% SUBMITTAL NOT FOR CONSTRUCTION

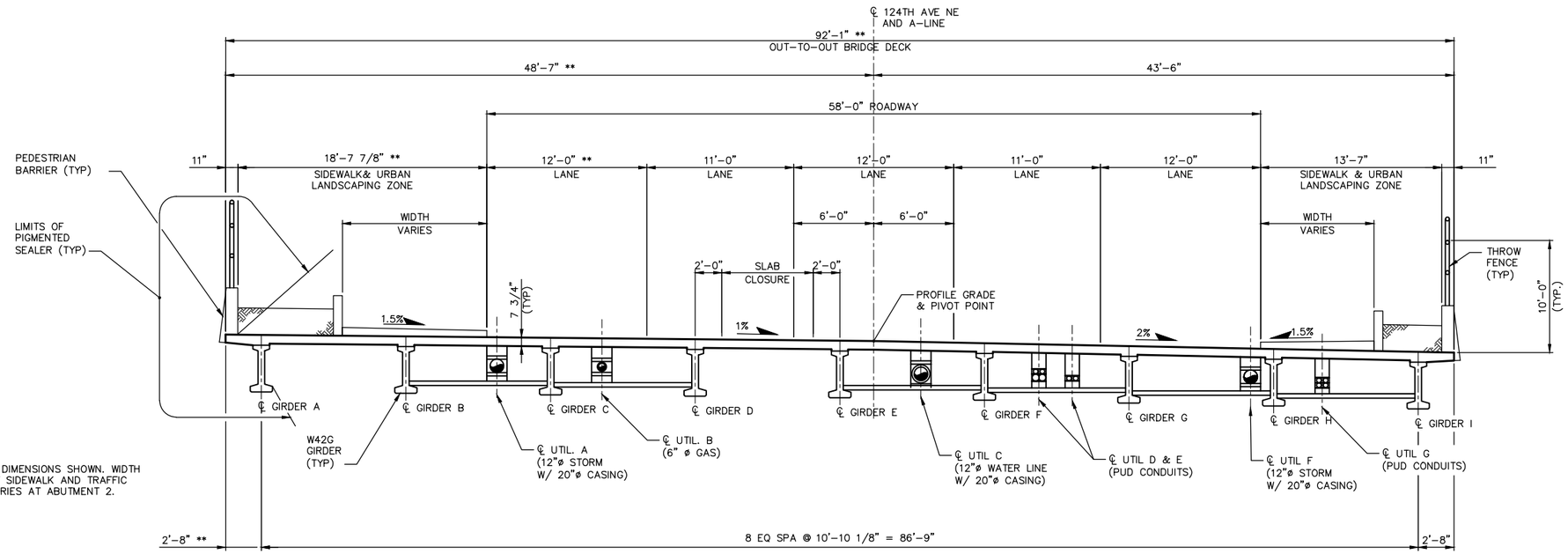

** TYPICAL DIMENSIONS SHOWN. WIDTH OF WEST SIDEWALK AND TRAFFIC LANE VARIES AT ABUTMENT 2.

TYPICAL SECTION

LOOKING AHEAD ON STATION.
HORIZONTAL DIMENSIONS ARE NORMAL
TO 124TH AVE NE CENTERLINE
UNLESS OTHERWISE NOTED.

5 2.5 0 5 10
SCALE

NO.	DATE	BY	APPR.	REVISIONS

Approved By

TRANSPORTATION DESIGN MANAGER — DATE
M. ARAKELYAN
PROJECT MANAGER — DATE

R. RICHARDSON
DESIGNED BY — DATE
J. FRYE
DRAWN BY — DATE
D. KORPI
CHECKED BY — DATE

City of Bellevue
TRANSPORTATION DEPARTMENT

124th Ave NE - NE Spring Blvd to NE Ichigo Way

BRIDGE
TYPICAL SECTION

SHEET NAME BR17

SHT 180 OF 198

95% SUBMITTAL NOT FOR CONSTRUCTION

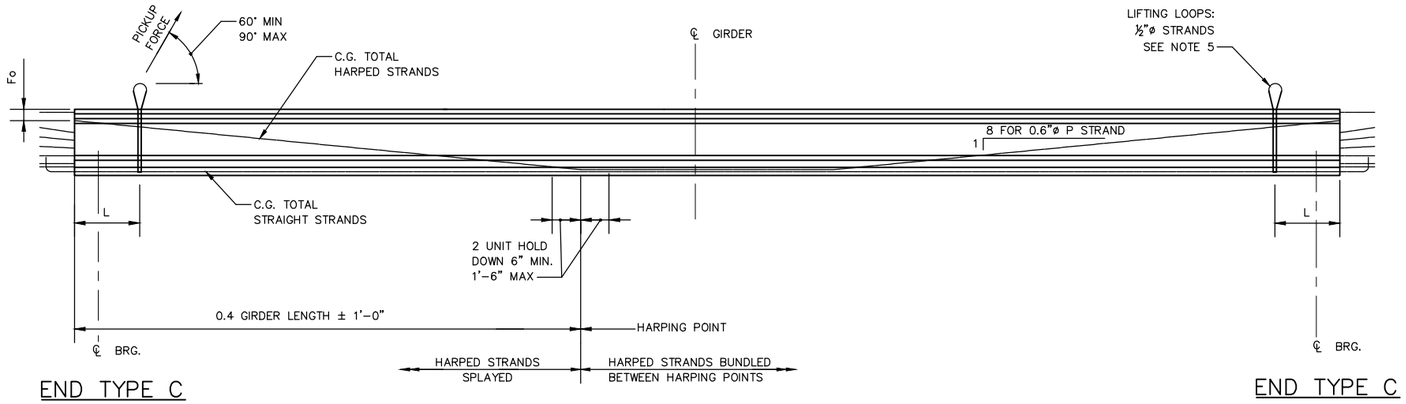

END TYPE C

END TYPE C

GIRDER ELEVATION DETAIL
NTS

GENERAL NOTES:

1. PLAN LENGTH SHALL BE INCREASED AS NECESSARY TO COMPENSATE FOR SHORTENING DUE TO PRESTRESS AND SHRINKAGE.
2. ALL PRETENSIONED AND TEMPORARY STRANDS SHALL BE LOW RELAXATION STRANDS (AASHTO M203 GRADE 270).
3. CUT ALL STRANDS FLUSH WITH THE GIRDER ENDS AND PAINT WITH AN APPROVED EPOXY RESIN EXCEPT FOR EXTENDED STRANDS AS SHOWN.
4. THE TOP SURFACE OF THE GIRDER FLANGE SHALL BE ROUGHENED IN ACCORDANCE WITH SECTION 6-02.03(25)H OF THE STANDARD SPECIFICATIONS.
5. LIFTING EMBEDMENTS SHALL BE INSTALLED IN ACCORDANCE WITH SECTION 6-02.3(25)L OF THE STANDARD SPECIFICATIONS.
6. CAUTION SHALL BE EXERCISED IN HANDLING AND PLACING GIRDERS. ALL GIRDERS SHALL BE CHECKED BY THE CONTRACTOR TO ENSURE THAT THEY ARE BRACED ADEQUATELY TO PREVENT TIPPING AND TO CONTROL LATERAL BENDING DURING SHIPPING. ONCE ERECTED, ALL GIRDERS SHALL BE BRACED LATERALLY TO PREVENT TIPPING UNTIL THE DIAPHRAGMS ARE CAST AND CURED.
7. SELF CONSOLIDATING CONCRETE SHALL NOT BE USED FOR FABRICATION OF PRECAST GIRDERS.
8. SEE SHEET BR20 FOR CONCRETE INSERT DETAILS.

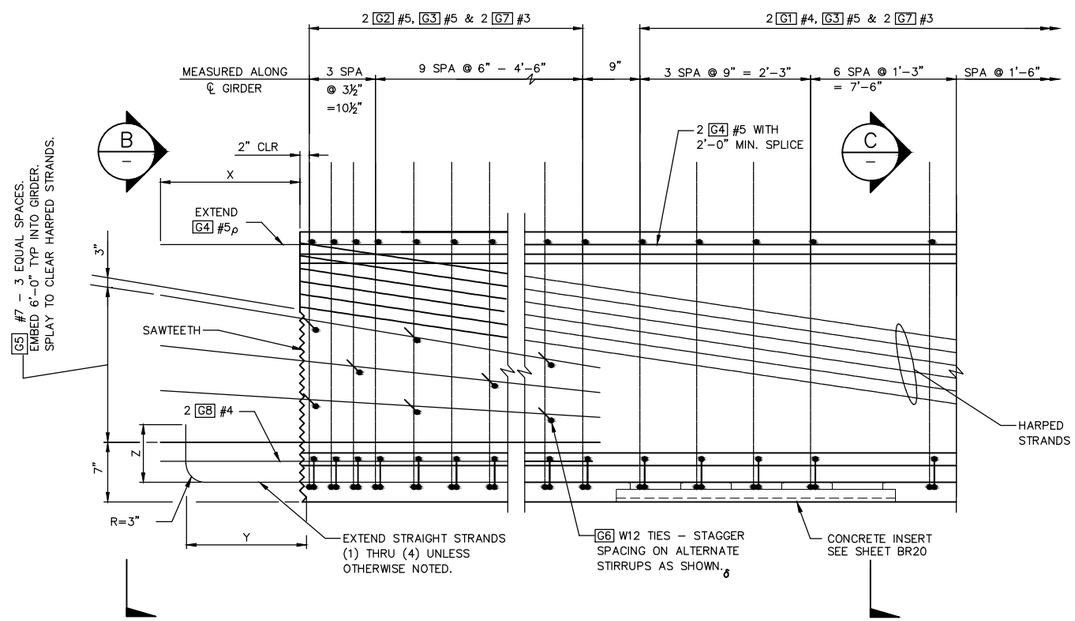

TYPICAL END ELEVATION
NTS

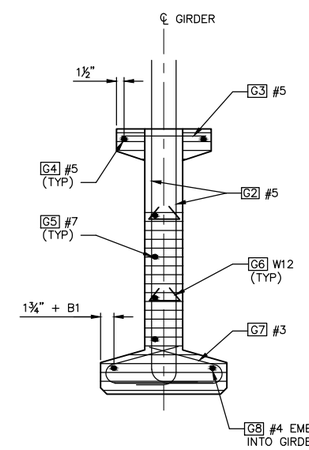

VIEW B

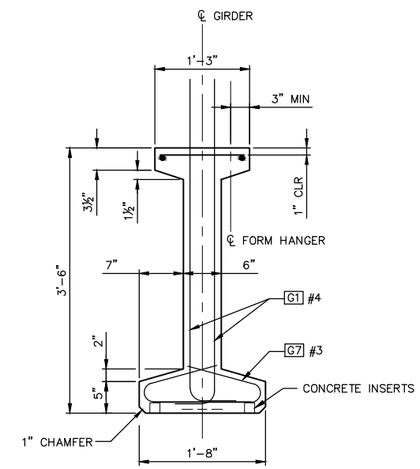

SECTION C

END TYPE	BEARING RECESS	X	Y	Z	SAWTEETH
C	NO	1'-10"	1'-6"	9"	YES

ρ - FIELD BENDING REQUIRED TO OBTAIN 1½" CONCRETE COVER AT PAVEMENT SEAT.

α - VARIES FOR SKEWED ENDS.
δ - #3 OR #4 MAY BE SUBSTITUTED. FIELD BENDING IS OPTIONAL.
β - PAIRS OF G7 BARS, OR G9 AND G10 BARS, MAY BE USED INTERCHANGEABLY AS BOTTOM FLANGE TIES.
γ - SHALL BE CHECKED FOR EFFECT OF VERTICAL CURVE.

NOTE: FOR DIMENSION "A", SEE "GIRDER SCHEDULE"

BENDING DIAGRAM (ALL DIMENSIONS ARE OUT TO OUT)

MARK	LOCATION	SIZE	NOTE
G1	GIRDER STIRRUPS	4	
G2	GIRDER END STIRRUPS	5	
G3	GIRDER TOP FLANGE	5	STR.
G4	GIRDER LONGIT. FULL LENGTH	5	ρ STR.
G5	GIRDER END LONGIT.	7	STR.
G6	GIRDER END TIES	W12	δ
G7	GIRDER BOT. FLANGE TIES	3	β
G8	GIRDER END LONGIT.	4	STR.
G9	GIRDER BOT. FLANGE TIES	3	β
G10	GIRDER BOT. FLANGE TIES	3	β

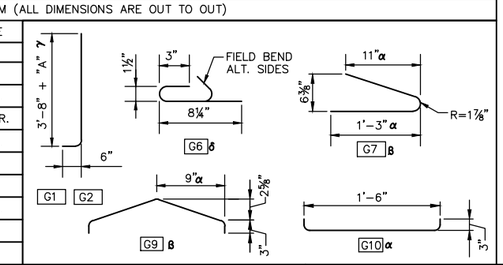

NO.	DATE	BY	APPR.	REVISIONS

Approved By

TRANSPORTATION DESIGN MANAGER — DATE
M. ARAKELYAN
PROJECT MANAGER — DATE

R. RICHARDSON — DESIGNED BY — DATE
J. FRYE — DRAWN BY — DATE
D. KORPI — CHECKED BY — DATE

City of Bellevue
TRANSPORTATION DEPARTMENT

HDR

124th Ave NE - NE Spring Blvd to NE Ichigo Way

BRIDGE
W42G GIRDER DETAILS 1

SHEET NAME BR18

SHT 181 OF 198

95% SUBMITTAL NOT FOR CONSTRUCTION

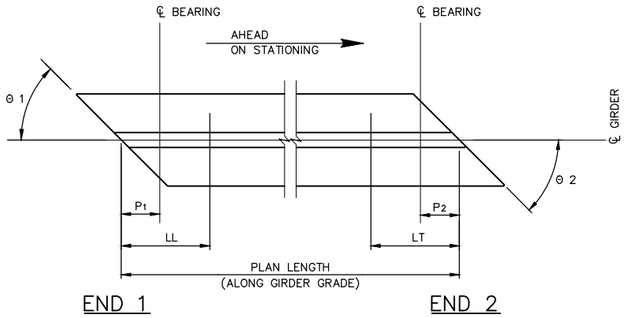

GIRDER SCHEDULE LEGEND

LL AND LT ARE SHIPPING SUPPORT LOCATIONS AT LEADING AND TRAILING ENDS, RESPECTIVELY.

GIRDER SCHEDULE

"C" IS DECK SCREED CAMBER AT MIDSPAN (TO ACCOUNT FOR DEFLECTION DUE TO SLAB PLACEMENT AND SUPERIMPOSED DEAD LOADS). SEE DETAIL "SCREED SETTING DIMENSIONS" SHT BR17

DIMENSION "A" AT ℄ OF BEARING = 9 1/2"

BASED ON GIRDER DEFLECTION = "D" AT TIME OF SLAB PLACEMENT (120 DAYS)

SPAN	GIRDER	END 1 TYPE	END 2 TYPE	L (FT)	LL (FT)	LT (FT)	Θ1 (DEG.)	Θ2 (DEG.)	P1	P2	PLAN LENGTH (ALONG GIRDER GRADE)	MIN. CONC COMP. STRENGTH		HARPED		STRAIGHT		LOCATION OF C.G. STRANDS				C (IN)	D (IN)	
												@ RELEASE F'CI (KSI)	@ FINAL F'C (KSI)	NO. OF STRANDS	JACKING FORCE (KIPS)	NO. OF STRANDS	JACKING FORCE (KIPS)	E (IN)	F ℄ (IN)	Fb (IN)	Fo (IN)		LOWER BOUND @ 40 DAYS	UPPER BOUND @ 120 DAYS
1	A	C	C	3'-6"	3'-7 1/4"	3'-7 1/4"	80.3	80.3	6 1/8"	6 1/8"	37'-8 7/8"	7.5	9.0	7	307.6	6	263.7	4"	9"	9"	1'-3"	1/8"	1/4"	1/2"
1	B	C	C	3'-6"	3'-7 1/4"	3'-7 1/4"	80.3	80.3	6 1/8"	6 1/8"	37'-8 7/8"	7.5	9.0	7	307.6	6	263.7	4"	9"	9"	1'-3"	1/8"	1/4"	1/2"
1	C	C	C	3'-6"	3'-7 1/4"	3'-7 1/4"	80.3	80.3	6 1/8"	6 1/8"	37'-8 7/8"	7.5	9.0	7	307.6	6	263.7	4"	9"	9"	1'-3"	1/8"	1/4"	1/2"
1	D	C	C	3'-6"	3'-7 1/4"	3'-7 1/4"	80.3	80.3	6 1/8"	6 1/8"	37'-8 7/8"	7.5	9.0	7	307.6	6	263.7	4"	9"	9"	1'-3"	1/8"	1/4"	1/2"
1	E	C	C	3'-6"	3'-7 1/4"	3'-7 1/4"	80.3	80.3	6 1/8"	6 1/8"	37'-8 7/8"	7.5	9.0	7	307.6	6	263.7	4"	9"	9"	1'-3"	1/8"	1/4"	1/2"
1	F	C	C	3'-6"	3'-7 1/4"	3'-7 1/4"	80.3	80.3	6 1/8"	6 1/8"	37'-8 7/8"	7.5	9.0	7	307.6	6	263.7	4"	9"	9"	1'-3"	1/8"	1/4"	1/2"
1	G	C	C	3'-6"	3'-7 1/4"	3'-7 1/4"	80.3	80.3	6 1/8"	6 1/8"	37'-9"	7.5	9.0	7	307.6	6	263.7	4"	9"	9"	1'-3"	1/8"	1/4"	1/2"
1	H	C	C	3'-6"	3'-7 1/4"	3'-7 1/4"	80.3	80.3	6 1/8"	6 1/8"	37'-9"	7.5	9.0	7	307.6	6	263.7	4"	9"	9"	1'-3"	1/8"	1/4"	1/2"
1	I	C	C	3'-6"	3'-7 1/4"	3'-7 1/4"	80.3	80.3	6 1/8"	6 1/8"	37'-9"	7.5	9.0	7	307.6	6	263.7	4"	9"	9"	1'-3"	1/8"	1/4"	1/2"

NOTE:
DIMENSIONS SHOWN TO THE NEAREST ⅛ INCH.

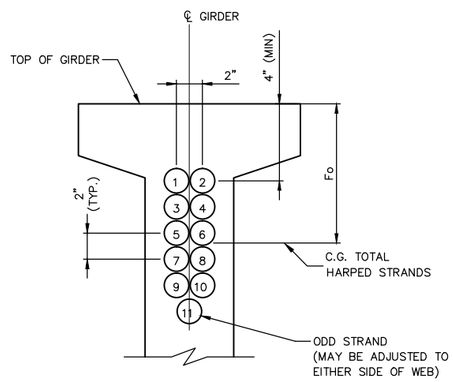

STRAND PATTERN AT GIRDER END

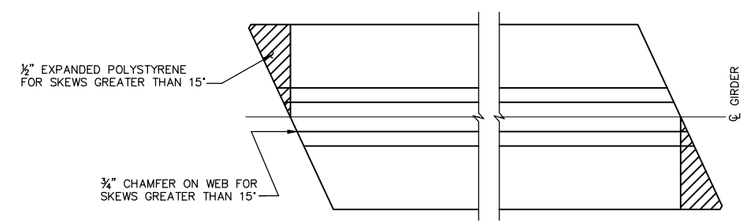

PLAN

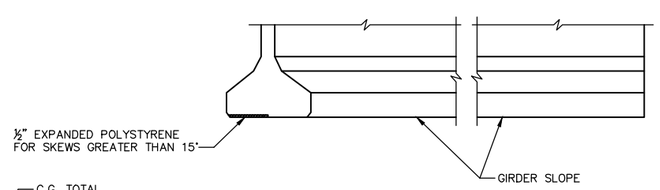

ELEVATION

BOTTOM FLANGE SPALL PROTECTION

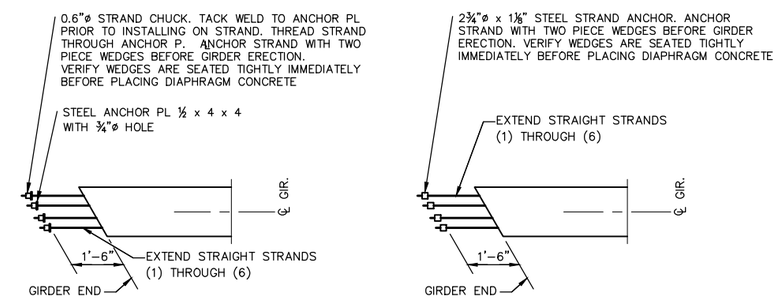

ALTERNATE #1

ALTERNATE #2

STRAND EXTENSION DETAIL

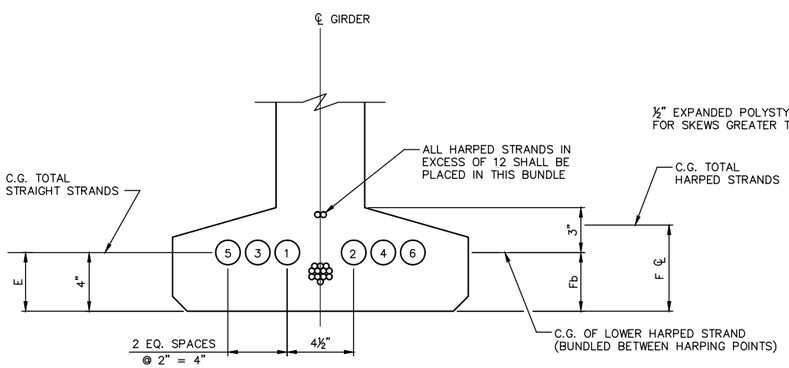

STRAND PATTERN AT ℄ SPAN

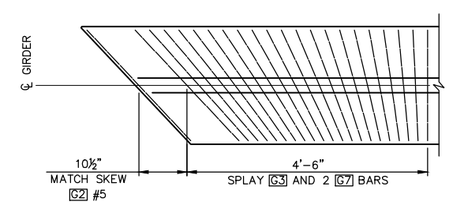

TRANSVERSE REINFORCING SKEWED ENDS

ONLY TRANSVERSE REINF. SHOWN.
LENGTH OF G3 AND G7 VARY WITH SKEW.

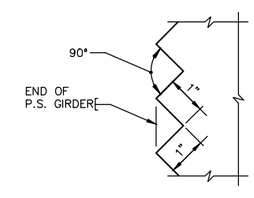

SAWTOOTH DETAIL

SAWTEETH ARE FULL WIDTH – USE SAWTOOTH KEYS FROM BOTTOM OF BOTTOM FLANGE TO BOTTOM OF LOWEST HARPED STRAND AS WELL AS TOP FLANGE ADJACENT TO HARPED STRANDS AS SHOWN IN VIEW B SHEET BR18.

NO.	DATE	BY	APPR.	REVISIONS

Approved By

TRANSPORTATION DESIGN MANAGER — DATE
M. ARAKELYAN
PROJECT MANAGER — DATE

R. RICHARDSON
DESIGNED BY — DATE
J. FRYE
DRAWN BY — DATE
D. KORPI
CHECKED BY — DATE

City of Bellevue
TRANSPORTATION DEPARTMENT

124th Ave NE - NE Spring Blvd to NE Ichigo Way

BRIDGE
W42G GIRDER DETAILS 2

SHEET NAME BR20

SHT 182 OF 198

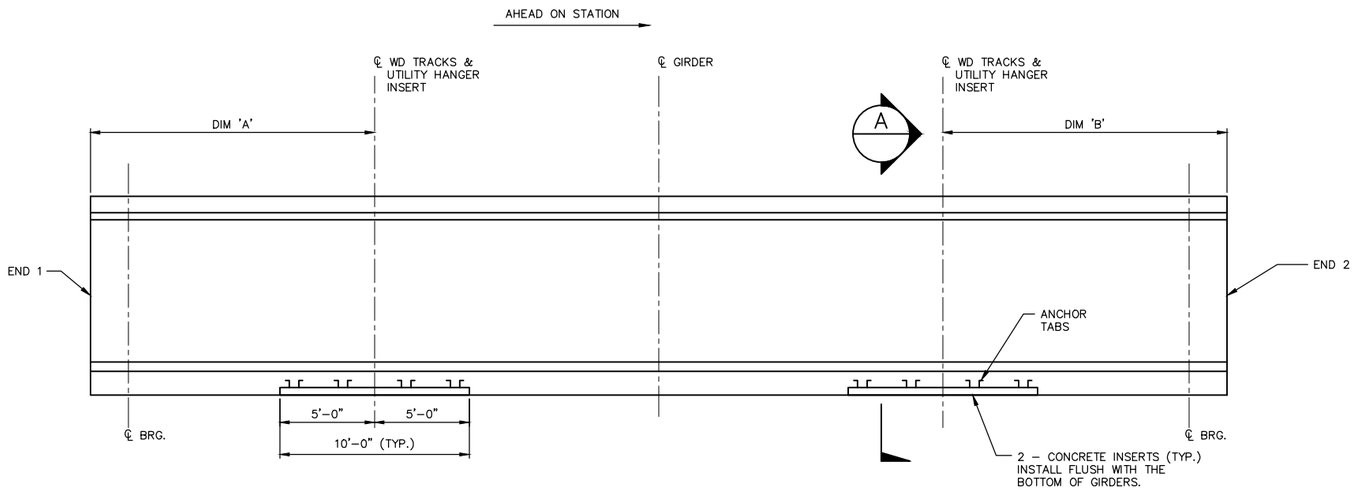

GIRDER ELEVATION – CONCRETE INSERT DETAIL

N.T.S.

(GIRDER REINF. NOT SHOWN FOR CLARITY)

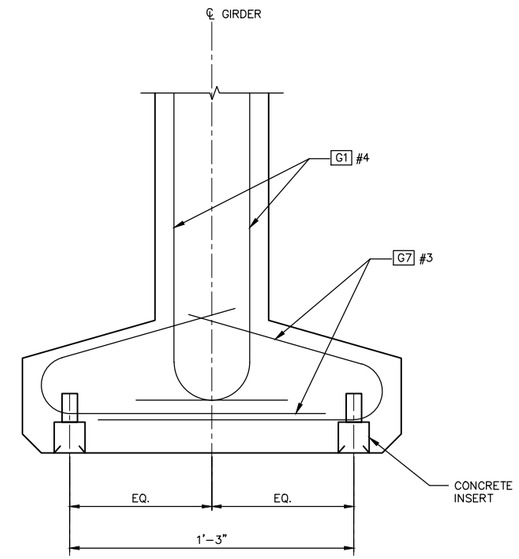

SECTION A –

N.T.S.

GIRDER CONCRETE INSERT SCHEDULE		
GIRDER	DIM 'A'	DIM 'B'
A	11'-10 3/4"	11'-7 1/4"
B	11'-11 1/2"	11'-6 1/2"
C	12'-1 1/4"	11'-4 7/8"
D	12'-1 5/8"	11'-4 1/2"
E	12'-2 1/8"	11'-4 1/8"
F	12'-1 7/8"	12'-4 1/2"
G	12'-1 1/2"	11'-4 7/8"
H	12'-0 3/8"	11'-6 1/4"
I	11'-10 1/2"	11'-8 1/4"

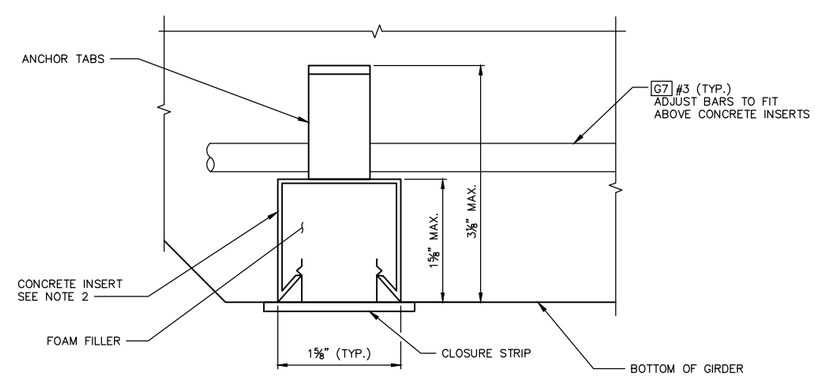

CONCRETE INSERT DETAIL

N.T.S.

NOTES

1. TO INHIBIT CONCRETE SEEPAGE, ALL INSERTS SHALL BE PROVIDED WITH CLOSURE STRIPS AND END CAPS OR FOAM FILLER.
2. UTILITY HANGER INSERTS SHALL BE EITHER COPPER B-LINE B22-1-120, POWER STRUT PS 349-10, OR UNISTRUT P3265 OR OTHER APPROVED CONCRETE INSERT.
3. MAX LOADING OF ATTACHMENTS TO THE CONCRETE INSERTS PER GIRDER SHALL BE NO GREATER THAN 8 KIPS/GIRDER.
4. INSERTS SHALL BE GALVANIZED AFTER FABRICATION PER AASHTO M111 OR AASHTO M 232.

NO.	DATE	BY	APPR.	REVISIONS

Approved By

TRANSPORTATION DESIGN MANAGER — DATE
M. ARAKELYAN
PROJECT MANAGER — DATE

R. RICHARDSON
DESIGNED BY — DATE
J. FRYE
DRAWN BY — DATE
D. KORPI
CHECKED BY — DATE

City of Bellevue
TRANSPORTATION DEPARTMENT

HDR

124th Ave NE - NE Spring Blvd to NE Ichigo Way

BRIDGE
W42G GIRDER DETAILS 3

SHEET NAME BR20

SHT 183 OF 198

95% SUBMITTAL NOT FOR CONSTRUCTION

GENERAL NOTES:

1. UNLESS NOTED OTHERWISE, ALL DIMENSIONS ARE IN FEET AND INCHES.
2. UNLESS OTHERWISE SHOWN, MIN LAP SPLICE LENGTHS OF DECK REINF. BARS SHALL BE AS:
   - #5 ▽: 3'-3"
   - #6 ▽: 3'-10"
   - #7 ▽: 4'-10"

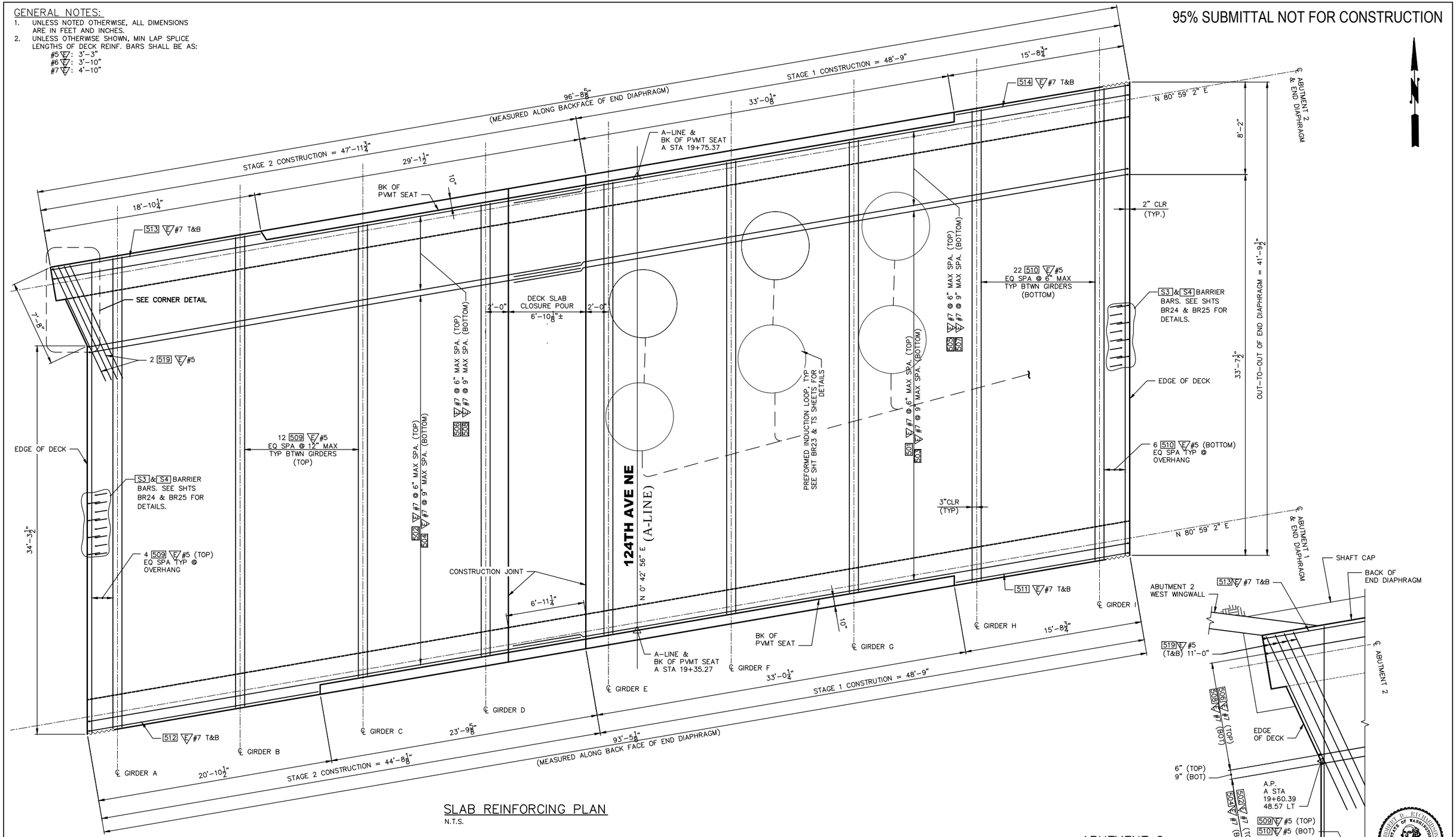

SLAB REINFORCING PLAN
N.T.S.

ABUTMENT 2 CORNER DETAIL
N.T.S.
(NOT ALL DECK AND ABUTMENT REINF. SHOWN FOR CLARITY)

NO.	DATE	BY	APPR.	REVISIONS

Approved By

TRANSPORTATION DESIGN MANAGER — DATE
M. ARAKELYAN
PROJECT MANAGER — DATE

R. RICHARDSON
DESIGNED BY — DATE
J. FRYE
DRAWN BY — DATE
D. KORPI
CHECKED BY — DATE

City of Bellevue
TRANSPORTATION DEPARTMENT

HDR

124th Ave NE - NE Spring Blvd to NE Ichigo Way

BRIDGE
SLAB REINFORCEMENT PLAN

SHEET NAME BR21

SHT 184 OF 198

95% SUBMITTAL NOT FOR CONSTRUCTION

GENERAL NOTES:

1. UNLESS OTHERWISE NOTED, ALL DIMENSIONS ARE IN FEET AND INCHES.
2. HORIZONTAL DIMENSIONS ARE NORMAL TO 124TH AVE NE ℄ UNLESS NOTED OTHERWISE.

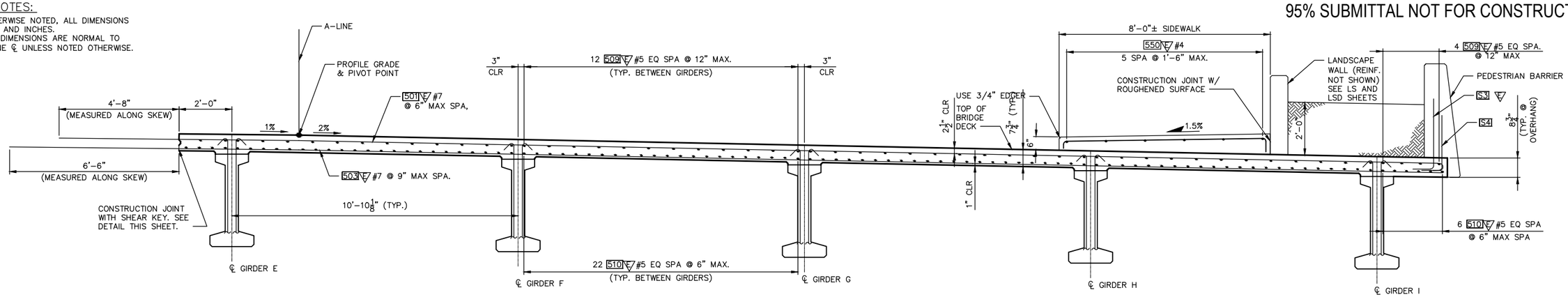

TYPICAL SECTION – STAGE 1

N.T.S. (LOOKING AHEAD ON STATION)

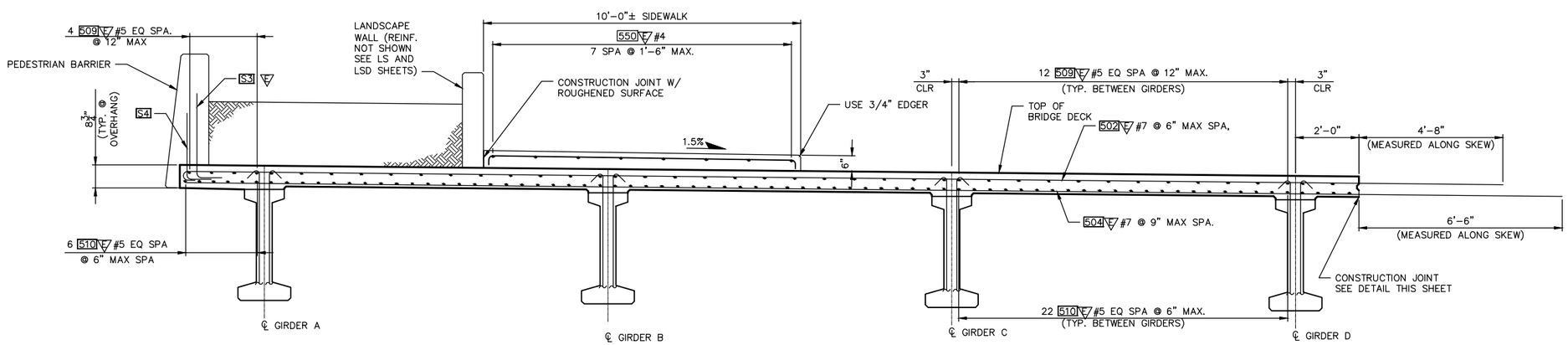

TYPICAL SECTION – STAGE 2

N.T.S. (LOOKING AHEAD ON STATION)

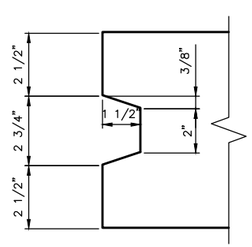

CONSTRUCTION JOINT DETAIL

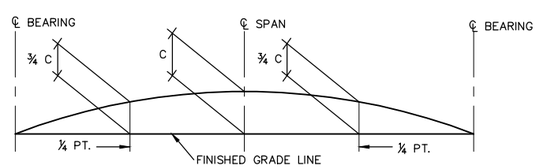

SCREED SETTING DIMENSIONS

FOR DIMENSION "C" SEE "GIRDER SCHEDULE" SHT BR20

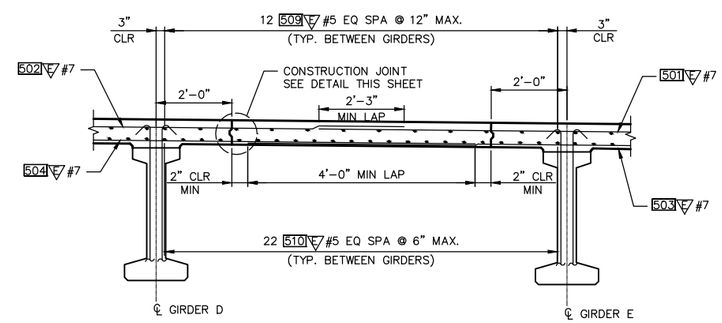

CLOSURE POUR DETAIL

NTS (LOOKING AHEAD ON STATION)

NO.	DATE	BY	APPR.	REVISIONS

Approved By

TRANSPORTATION DESIGN MANAGER — DATE
M. ARAKELYAN
PROJECT MANAGER — DATE

R. RICHARDSON
DESIGNED BY — DATE
J. FRYE
DRAWN BY — DATE
D. KORPI
CHECKED BY — DATE

City of Bellevue
TRANSPORTATION DEPARTMENT

HDR

124th Ave NE - NE Spring Blvd to NE Ichigo Way

BRIDGE DECK REINFORCING TYPICAL SECTION

SHEET NAME **BR22**

SHT 185 OF 198

95% SUBMITTAL NOT FOR CONSTRUCTION

GENERAL NOTES:

1. INSTALLATION OF SIGNAL DETECTION LOOPS IN THE BRIDGE DECK SHALL BE CAST–IN–PLACE AND INSTALLATION BY SAW CUTTING AN EXISTING BRIDGE DECK SHALL NOT BE ALLOWED. THIS PLAN IS INTENDED FOR NEW CONSTRUCTION ONLY (NOT ALLOWED FOR EXISTING STRUCTURES).
2. FOR SUPPLEMENTAL SPLICE IN ADJACENT JUNCTION BOX, SEE SPLICE DETAIL, PER STANDARD PLAN J–50.15.
3. PREFORMED LOOPS SHALL CONFORM TO THE LAYOUTS, NUMBERING DETAILS, MARKING REQUIRE– MENTS, AND WIRING DIAGRAMS OF STANDARD PLAN J–50.12 FOR THE NUMBER AND TYPES OF LOOPS SHOWN IN THE CONTRACT PLANS.
4. LOOPS SHALL BE TESTED IMMEDIATELY PRIOR TO POURING CONCRETE, PER STANDARD SPECIFICATION 8–20.3(14)D.
5. LAYOUT PREFORMED LOOPS AND LOOP LEAD–INS TO MAINTAIN 1' (FT.) CLEARANCE FROM JOINTS.
6. CONSTRUCT A SUPPLEMENTAL SPLICE CONTAINING ANY SERIES LOOP CONNECTIONS IN ADJACENT JUNCTION BOX AS REQUIRED IN THE PLANS. SUPPLEMENTAL SPLICES ARE SUBJECT TO THE SAME REQUIREMENTS SHOWN FOR THE LOOP LEAD–IN AND THE SHIELDED CABLE SPLICE, AS SHOWN IN STANDARD PLAN J–50.12.
7. BARRIER JUNCTION BOX ~8"X8"X18" NEMA 4X IN STATIONARY–FORM BARRIER, ADJUSTABLE NEMA 3R IN SLIP–FORM BARRIER. (JUNCTION BOX CAN BE RECESSED UP TO 1/8".) SEE STANDARD PLAN J–40.36 OR J–40.37.
8. FOR INSTALLATION OF JUNCTION BOX IN THE SIDEWALK, SEE STANDARD PLAN J–40.40.

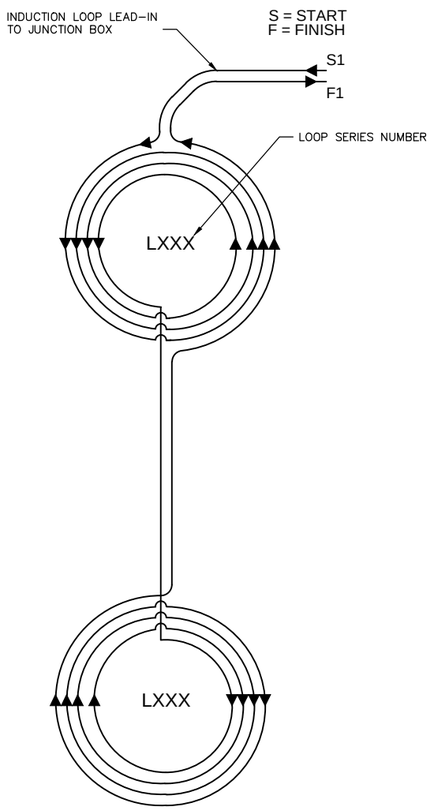

WIRING DIAGRAM FOR PREFORMED INDUCTION LOOP 2–LOOP ARRAY
N.T.S.

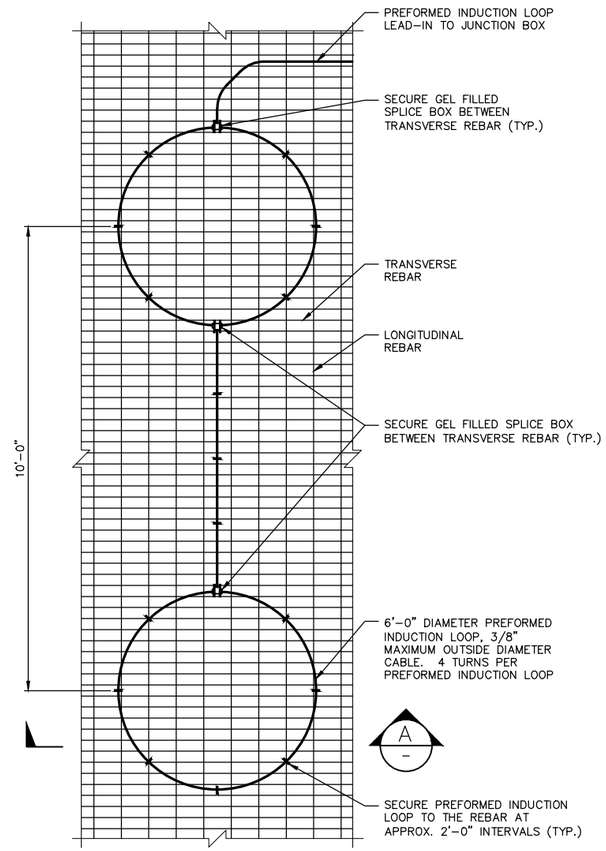

PLAN
N.T.S.

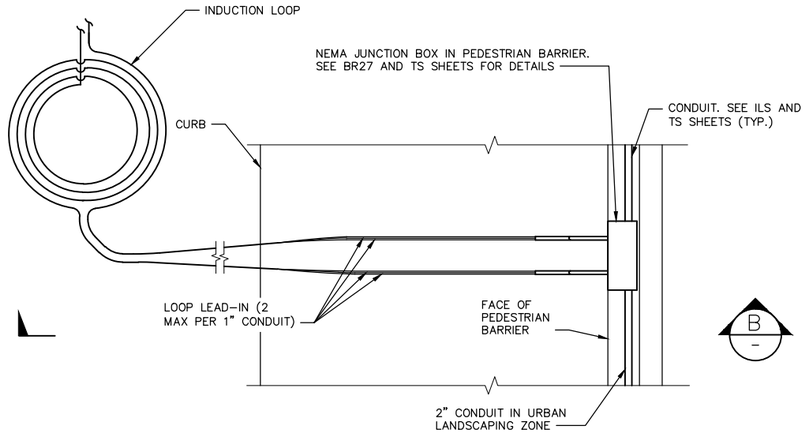

INDUCTION LOOP JUNCTION BOX
PARTIAL PLAN
N.T.S.

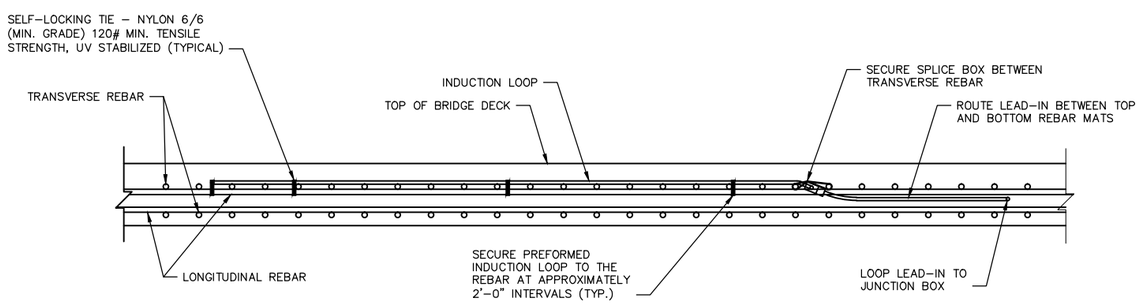

SECTION A
N.T.S.

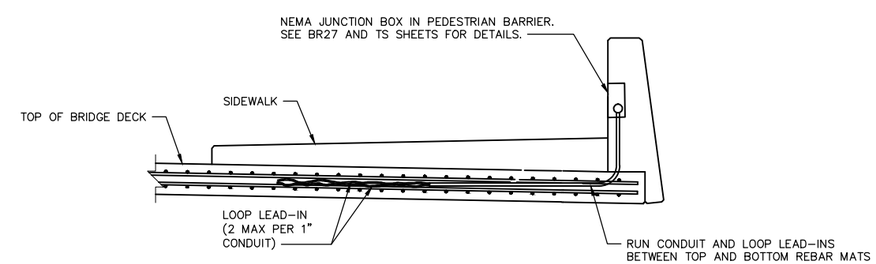

SECTION B
N.T.S.

NO.	DATE	BY	APPR.	REVISIONS

Approved By

TRANSPORTATION DESIGN MANAGER — DATE
M. ARAKELYAN
PROJECT MANAGER — DATE

R. RICHARDSON
DESIGNED BY — DATE
J. FRYE
DRAWN BY — DATE
D. KORPI
CHECKED BY — DATE

City of Bellevue
TRANSPORTATION DEPARTMENT

HDR

124th Ave NE - NE Spring Blvd to NE Ichigo Way

PREFORMED INDUCTION LOOP INSTALLATION DETAILS

SHEET NAME **BR23**

SHT 186 OF 198

GENERAL NOTES:

1. UNLESS OTHERWISE NOTED, ALL DIMENSIONS ARE IN FEET AND INCHES.
2. SEE LANDSCAPE & URBAN DESIGN DETAILS SHEETS FOR THROW SCREEN, ARCHITECTURAL FASCIA PATTERN & CONC. PILASTER DETAILS.
3. CONC. PEDESTRIAN BARRIER AND CONC. PILASTER SHALL HAVE A CLASS I SURFACE FINISH TYP.

95% SUBMITTAL NOT FOR CONSTRUCTION

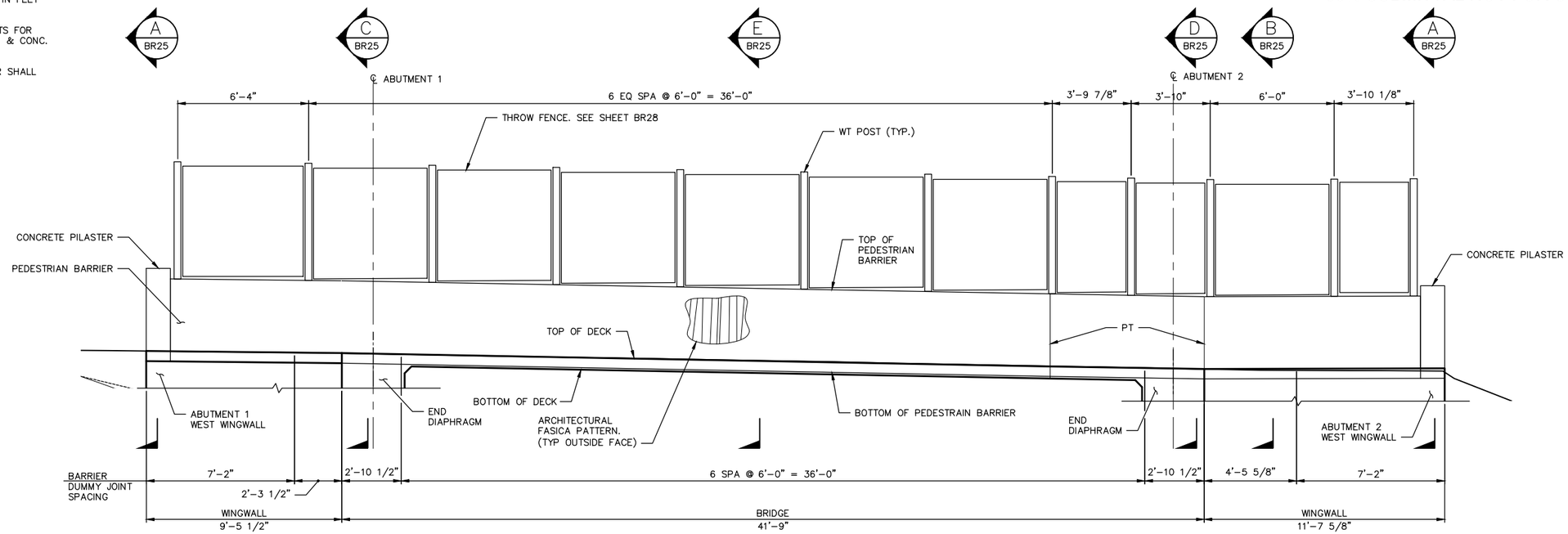

WEST BARRIER REFLECTED DEVELOPED ELEVATION

N.T.S.
(DIMENSIONS ARE MEASURED ALONG OUTSIDE FACE OF WINGWALLEDGE OF DECK)

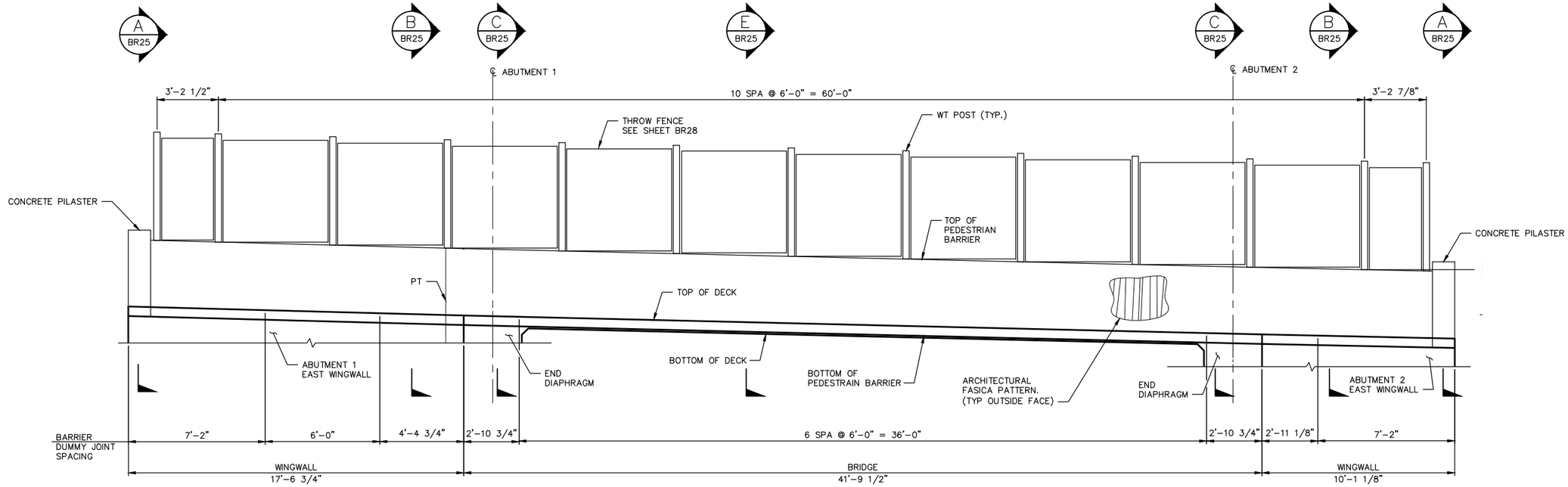

EAST BARRIER DEVELOPED ELEVATION

N.T.S.
(DIMENSIONS ARE MEASURED ALONG OUTSIDE FACE OF WINGWALLEDGE OF DECK)

NO.	DATE	BY	APPR.	REVISIONS

Approved By

TRANSPORTATION DESIGN MANAGER — DATE
M. ARAKELYAN
PROJECT MANAGER — DATE

R. RICHARDSON — DESIGNED BY — DATE
J. FRYE — DRAWN BY — DATE
D. KORPI — CHECKED BY — DATE

City of Bellevue
TRANSPORTATION DEPARTMENT

HDR

124th Ave NE - NE Spring Blvd to NE Ichigo Way

BRIDGE BARRIER LAYOUT

SHEET NAME **BR24**

SHT 187 OF 198

95% SUBMITTAL NOT FOR CONSTRUCTION

GENERAL NOTES:

1. BARRIERS SHALL HAVE CONDUITS. SEE ILS AND TS SHEETS FOR DETAILS.

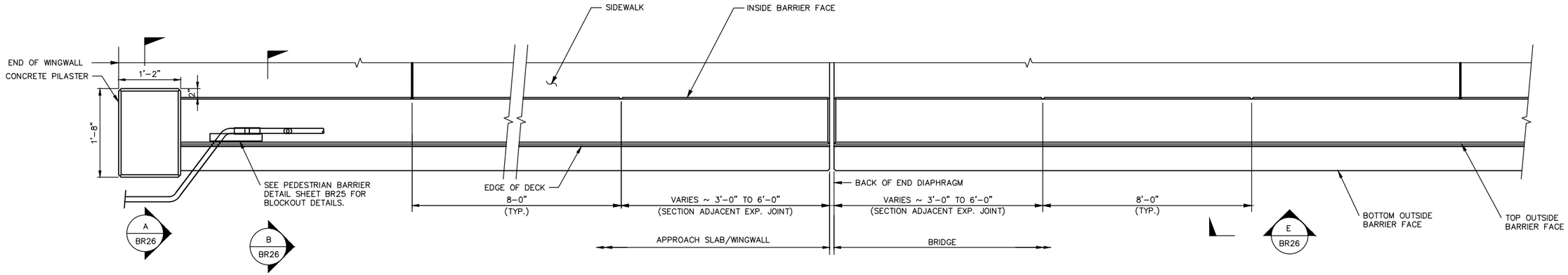

TERMINATE EACH CONDUIT PIPE AT SEPARATE JUNCTION BOXES OFF END OF BRIDGE. SEE ILS AND TS SHEETS.

PEDESTRIAN BARRIER – PARTIAL PLAN

CONSTRUCTION JOINTS WITH SHEAR KEYS ARE PERMISSIBLE AT DUMMY JOINT LOCATIONS. FORM JOINTS BETWEEN DUMMY JOINTS SHALL NOT BE PERMITTED.

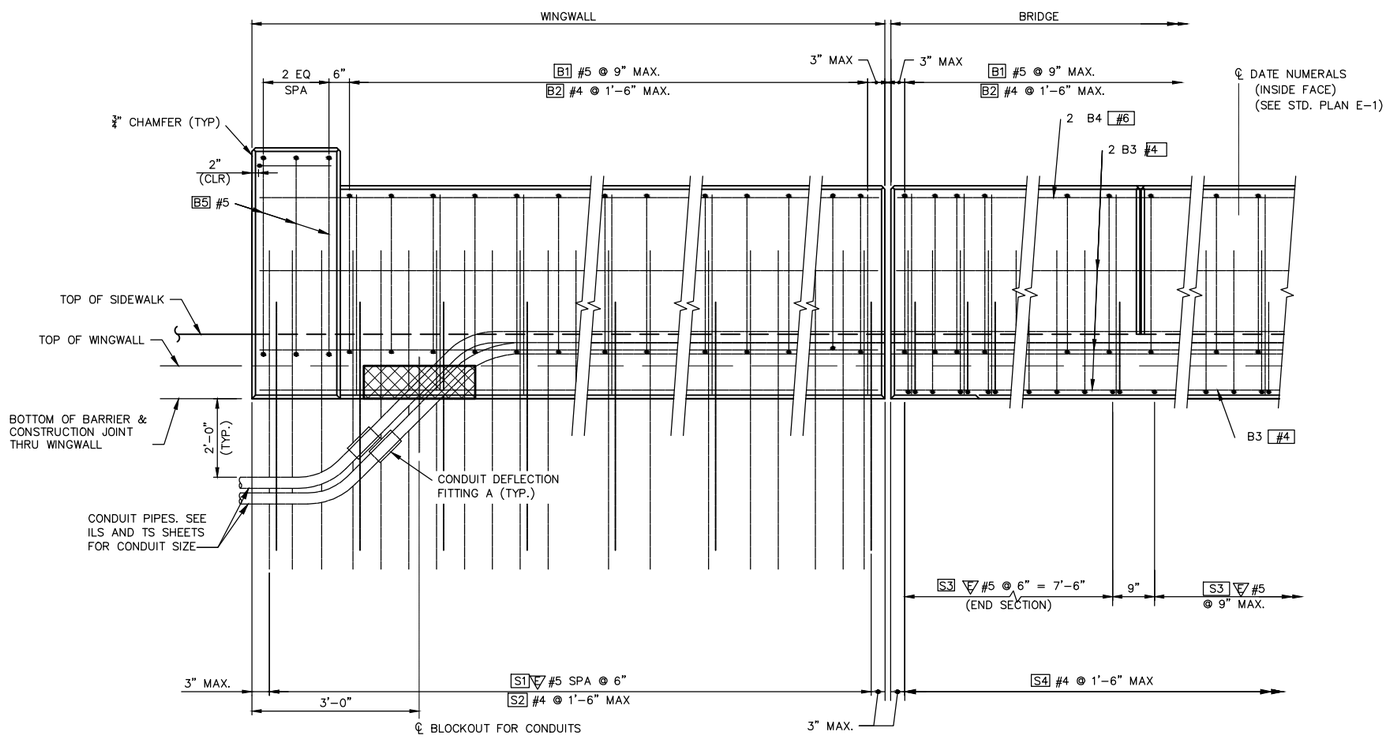

PEDESTRIAN BARRIER – PARTIAL OUTSIDE ELEVATION

N.T.S.

(THROW SCREEN NOT SHOWN FOR CLARITY)

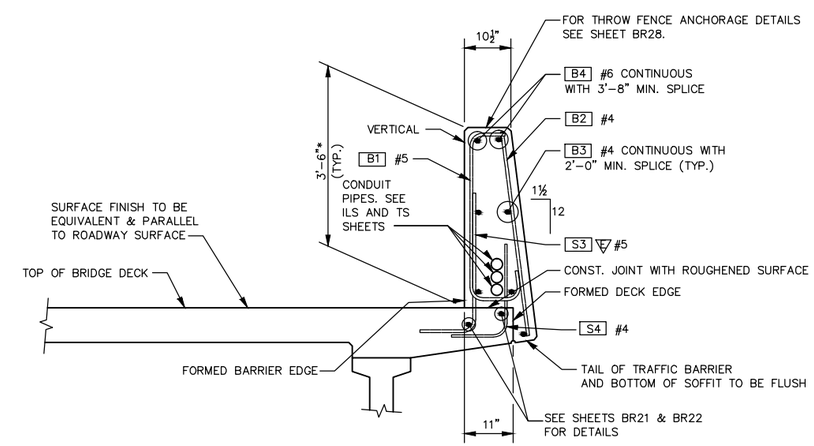

* MIN. HEIGHT. PEDESTRIAN BARRIER HEIGHT MAY VARY IF REQUIRED TO PROVIDE A SMOOTH PROFILE.

** INCLUDE IN SUPERSTRUCTURE BARLIST.

TYPICAL SECTION

N.T.S.

PEDESTRIAN BARRIER (SECTION THRU BRIDGE)

NO.	DATE	BY	APPR.	REVISIONS

Approved By

TRANSPORTATION DESIGN MANAGER — DATE
M. ARAKELYAN
PROJECT MANAGER — DATE

R. RICHARDSON
DESIGNED BY — DATE
J. FRYE
DRAWN BY — DATE
D. KORPI
CHECKED BY — DATE

City of Bellevue
TRANSPORTATION DEPARTMENT

124th Ave NE - NE Spring Blvd to NE Ichigo Way

BRIDGE
PEDESTRIAN BARRIER DETAILS 1 OF 3

SHEET NAME **BR25**

95% SUBMITTAL NOT FOR CONSTRUCTION

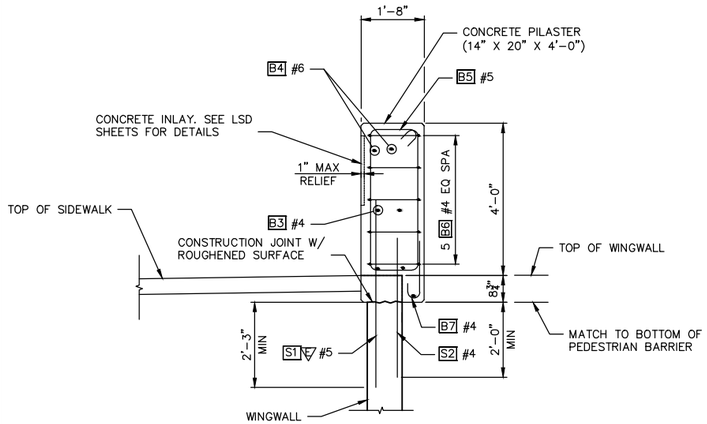

END VIEW (A / BR23)
N.T.S.

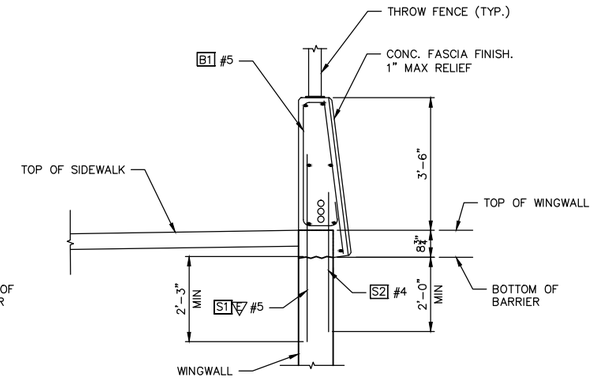

SECTION THRU APRROACH SLAB & WINGWALL (B / BR23)
N.T.S.

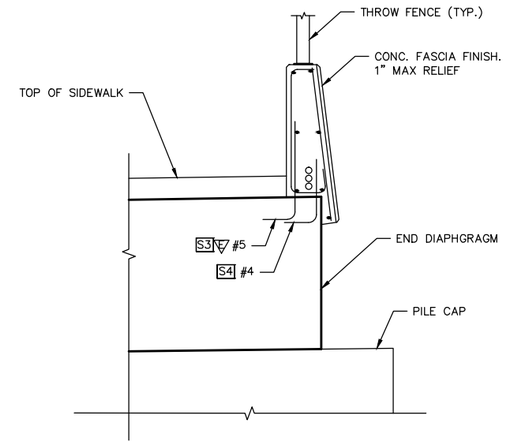

SECTION THRU END DIAPHRAGM (C / BR23)
N.T.S.
(ABUT. 1 EAST & WEST CORNER
ABUT. 2 EAST CORNER)

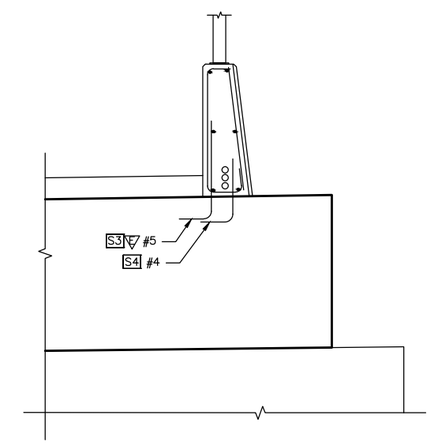

SECTION THRU END DIAPHRAGM (D / BR23)
N.T.S.
(ABUT. 2 WEST CORNER)

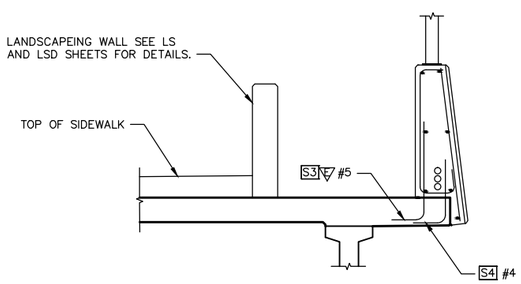

SECTION THRU BRIDGE (E / BR23)
N.T.S.

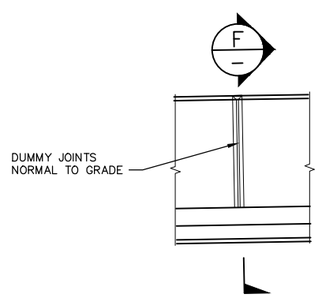

END VIEW (E / BR23)
N.T.S.

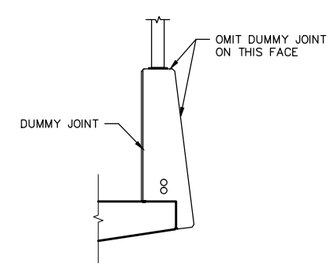

SECTION (F / –)
N.T.S.

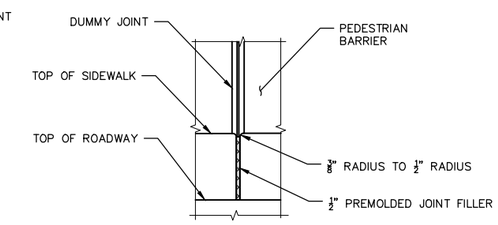

SIDEWALK JOINT DETAIL
N.T.S.
(SIDEWALK REINFORCING STEEL NOT SHOWN FOR CLARITY)

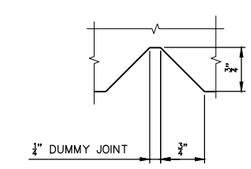

DUMMY JOINT DETAIL
N.T.S.

PEDESTRIAN BARRIER BAR BENDING DIAGRAM

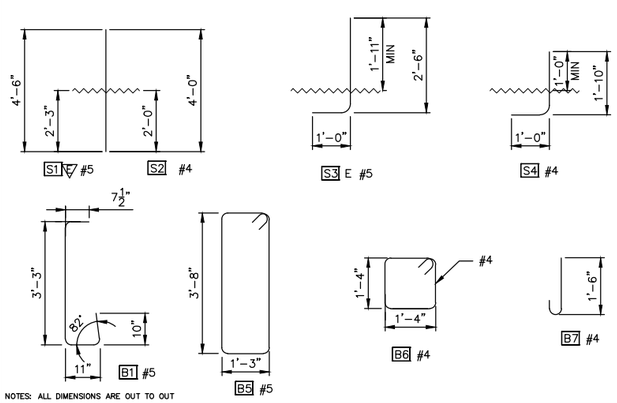

NOTES: ALL DIMENSIONS ARE OUT TO OUT

JUNCTION BOX LOCATIONS		
STATION	OFFSET	"TS" OR "LT"
19+70	42.57' RT.	TS

TS = TRAFFIC SYSTEM LT = LIGHTING SYSTEM

INSTALL ALL CONDUIT RUNS TO DRAIN TO A BRIDGE END OR PROVIDE DRAIN AS ALL LOW POINTS IN CONDUIT RUN ON BRIDGE.

NO.	DATE	BY	APPR.	REVISIONS

Approved By

TRANSPORTATION DESIGN MANAGER — DATE
M. ARAKELYAN
PROJECT MANAGER — DATE

R. RICHARDSON
DESIGNED BY — DATE
J. FRYE
DRAWN BY — DATE
D. KORPI
CHECKED BY — DATE

City of Bellevue
TRANSPORTATION DEPARTMENT

124th Ave NE - NE Spring Blvd to NE Ichigo Way

BRIDGE
PEDESTRIAN BARRIER DETAILS 2 OF 3

SHEET NAME **BR26**

SHT 189 OF 198

95% SUBMITTAL NOT FOR CONSTRUCTION

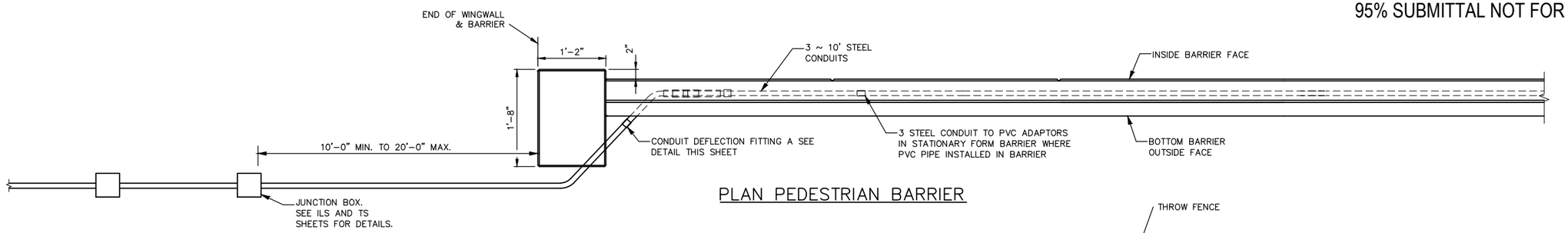

PLAN PEDESTRIAN BARRIER

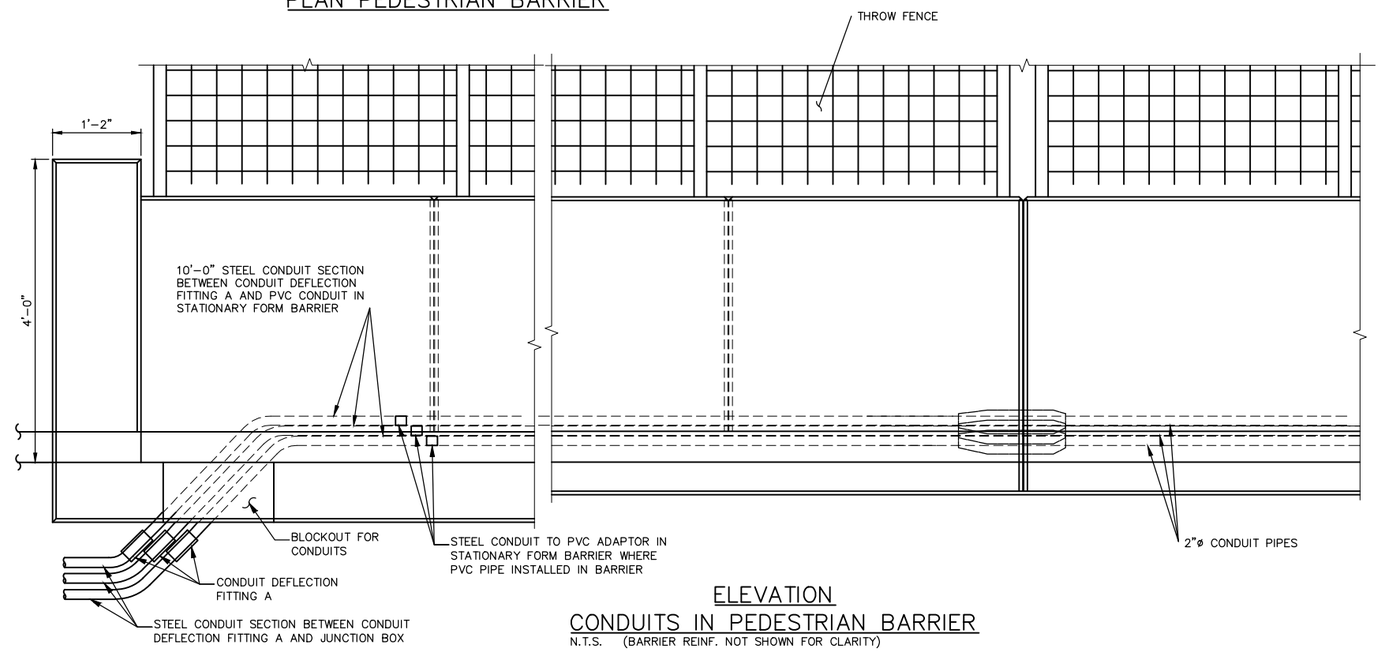

ELEVATION

CONDUITS IN PEDESTRIAN BARRIER

N.T.S. (BARRIER REINF. NOT SHOWN FOR CLARITY)

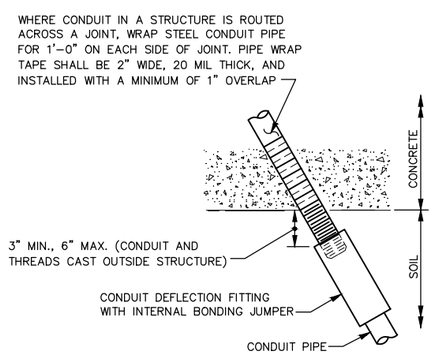

CONDUIT DEFLECTION FITTING A

CONDUIT FITTING – TYPE DX FOR DEFLECTION OF 30° AND ¾" MOVEMENT. PLACE AT CONDUIT PIPE EXIT FROM STRUCTURE

NO.	DATE	BY	APPR.	REVISIONS

Approved By

TRANSPORTATION DESIGN MANAGER — DATE

M. ARAKELYAN
PROJECT MANAGER — DATE

R. RICHARDSON
DESIGNED BY — DATE
J. FRYE
DRAWN BY — DATE
D. KORPI
CHECKED BY — DATE

City of Bellevue
TRANSPORTATION DEPARTMENT

HDR

124th Ave NE - NE Spring Blvd to NE Ichigo Way

BRIDGE
PEDESTRIAN BARRIER DETAILS 3 OF 3

SHEET NAME BR27

SHT 190 OF 198

95% SUBMITTAL NOT FOR CONSTRUCTION

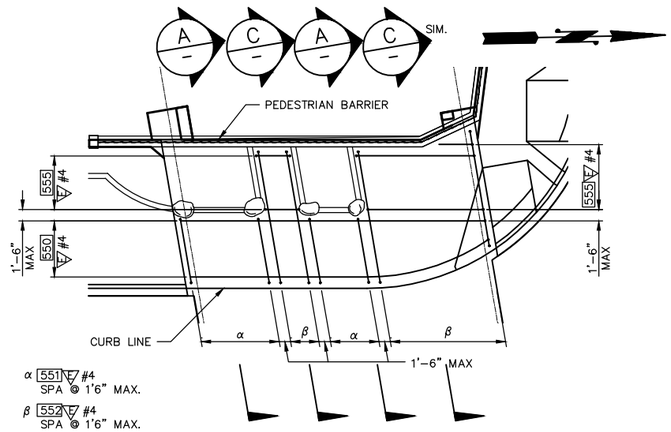

WEST SIDEWALK PLAN
SCALE: 1" = 10'

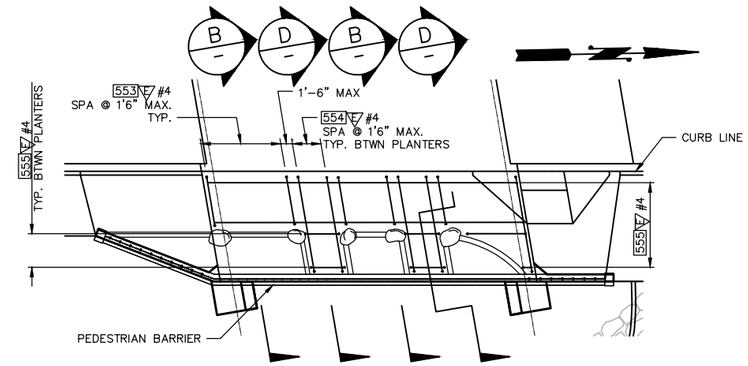

EAST SIDEWALK PLAN
SCALE: 1" = 10'

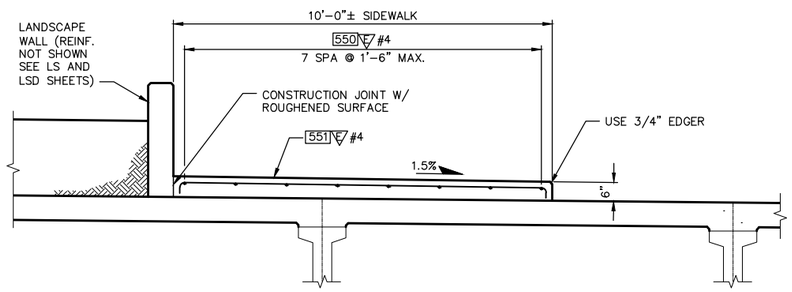

SECTION A
N.T.S.

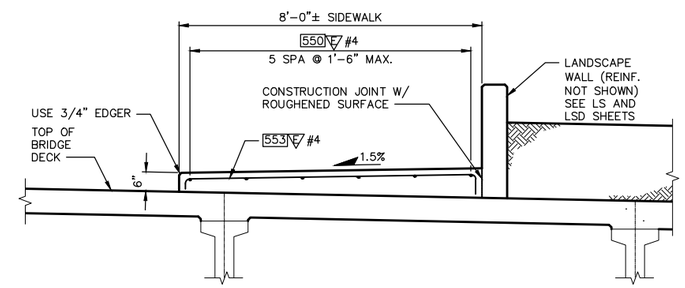

SECTION B
N.T.S.

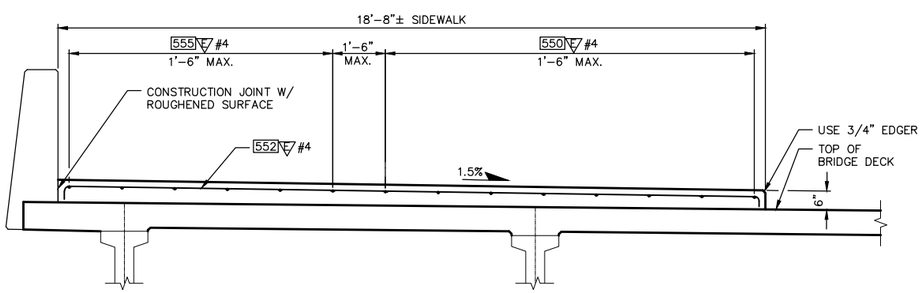

SECTION C
N.T.S.

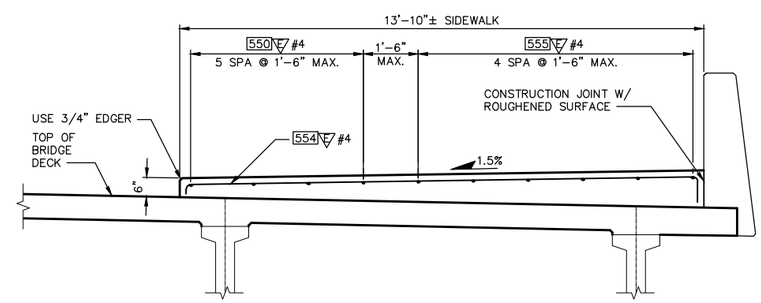

SECTION D
N.T.S.

NOTE:
IRRIGATION AND DRAINAGE PIPES NOT SHOWN.
SEE IR, LS AND DR SHEETS.

NO.	DATE	BY	APPR.	REVISIONS

Approved By

TRANSPORTATION DESIGN MANAGER — DATE
M. ARAKELYAN
PROJECT MANAGER — DATE

R. RICHARDSON — DESIGNED BY — DATE
C. WILCOX — DRAWN BY — DATE
P. FERRIER — CHECKED BY — DATE

City of Bellevue
TRANSPORTATION DEPARTMENT

HDR

124th Ave NE - NE Spring Blvd to NE Ichigo Way

BRIDGE
SIDEWALK DETAILS

SHEET NAME BR27A

SHT 190A OF 198

95% SUBMITTAL NOT FOR CONSTRUCTION

NOTES:

1. SEE LS AND LSD SHEETS FOR THROW FENCE LAYOUT AND DIMENSIONS NOT SHOWN.
2. INSTALL ALL FENCE POSTS PLUMB.

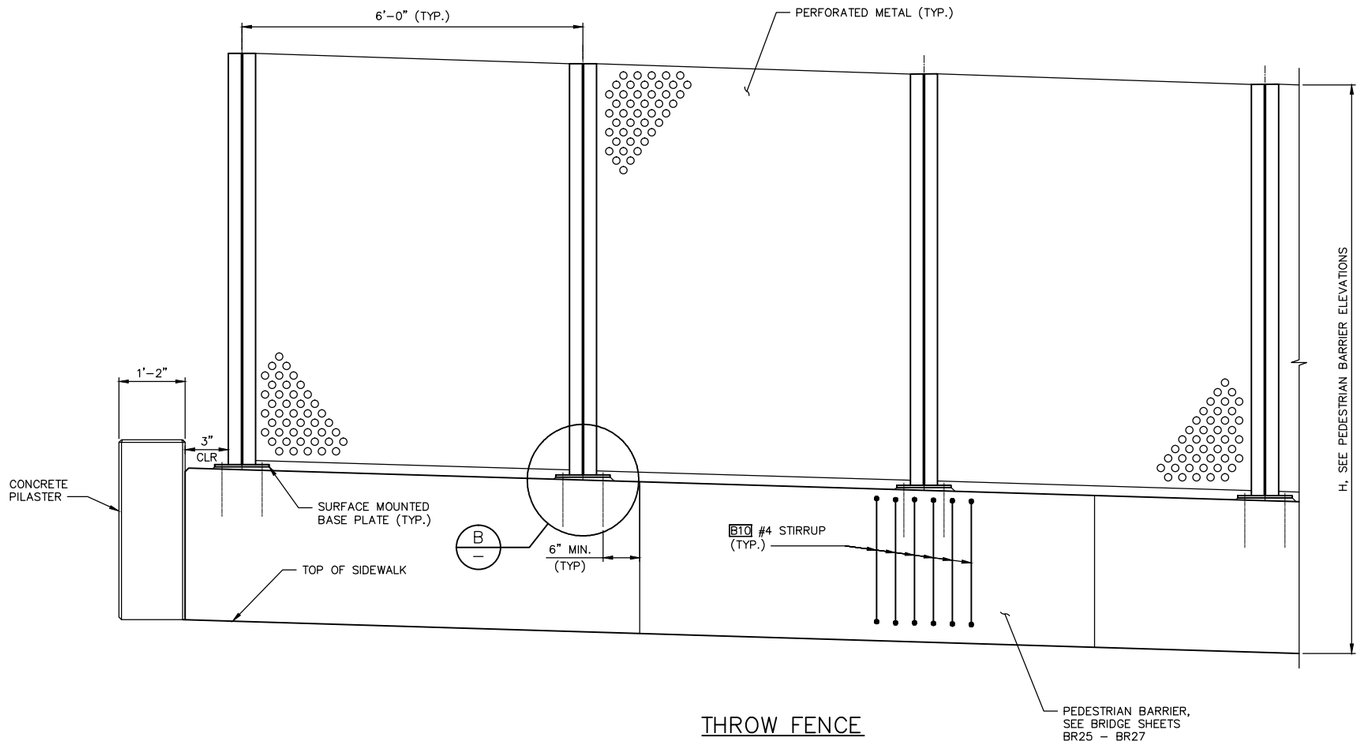

THROW FENCE

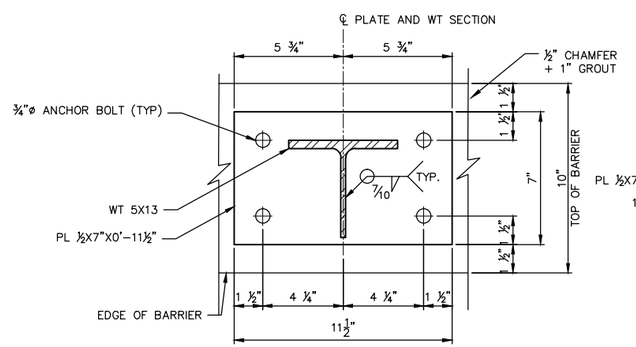

PLAN

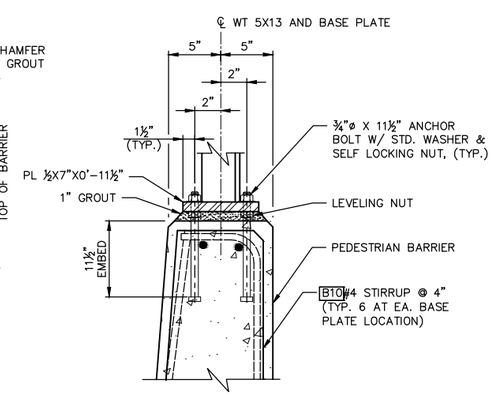

SECTION

DETAIL B
N.T.S.

NO.	DATE	BY	APPR.	REVISIONS

Approved By

TRANSPORTATION DESIGN MANAGER — DATE
M. ARAKELYAN
PROJECT MANAGER — DATE

R. RICHARDSON
DESIGNED BY — DATE
J. FRYE
DRAWN BY — DATE
D. KORPI
CHECKED BY — DATE

City of Bellevue
TRANSPORTATION DEPARTMENT

HDR

124th Ave NE - NE Spring Blvd to NE Ichigo Way

BRIDGE
THROW FENCE ANCHORAGE DETAILS

SHEET NAME BR28

SHT 191 OF 198

95% SUBMITTAL NOT FOR CONSTRUCTION

GENERAL NOTES:

1. ALL EDGES OF BRIDGE APPROACH SLAB SHALL HAVE A 1/2" RADIUS. EXCEPT AT LONGITUDINAL JOINTS.
2. LONGITUDINAL JOINTS SHALL BE PLACED ON LANE LINES AND SHALL BE CONSTRUCTED AND SEALED IN ACCORDANCE WITH STD. SPEC. SECTION 5-05.3(8). JOINTS MAY BE EITHER A SAW CUT CRACK CONTROL JOINT OR A CONSTRUCTION JOINT EXCEPT AS NOTED. SAWCUT JOINTS SHALL TERMINATE 1'-0" BEFORE REACHING EDGE OF SLAB AND MUST BE SAW CUT AS SOON AS POSSIBLE AFTER PLACEMENT OF CONCRETE.
3. BAR BENDS, LENGTH & QUANTITIES SHOWN FOR REFERENCE. CONTRACTOR SHALL VERIFY ALL DIMENSIONS, LENGTHS AND QUANTITIES.
4. SEE LS AND PV SHEETS FOR TRANSVERSE SAWCUTS.

APPROACH SLAB BAR LIST

	LOCATION	MARK	SIZE	NO.	LENGTH
NORTH APPROACH SLAB	LONG. BOTTOM TYP	AP1	#8	146	15'-10 3/4"
	LONG. TOP TYP	AP2	E #5	146	15'-10 3/4"
	TRANSV. BOTTOM	AP3	#5	20	VARIES 61'-4" TO 75'-9"
	TRANSV. TOP	AP4	E #6	15	VARIES 61'-4" TO 75'-9"
	TRANSV. END	AP5	E #5	4	61'-4" OR 75'-9"
	EDGE CURVE BAR	AP6	E #5	2	18'-5 3/8"
	END U-BAR	AP7	E #5	180	
	LONG. BOTTOM	AP9	#8	34	VARIES 1'-10" TO 15'-5"
	LONG. TOP	AP10	E #5	34	VARIES 1'-10" TO 15'-5"
SOUTH APPROCH SLAB	LONG. BOTTOM	AP1	#8	135	19'-11 1/2"
	LONG. TOP	AP2	E #5	135	19'-11 1/2"
	TRANSV. BOTTOM	AP3	#5	26	56'-5 3/4"
	TRANSV. TOP	AP4	E #6	19	56'-5 3/4"
	TRANSV. END	AP5	E #5	4	56'-5 3/4"
	END U-BAR	AP7	E #5	135	

BENDING DETAIL FOR QUANTITIES

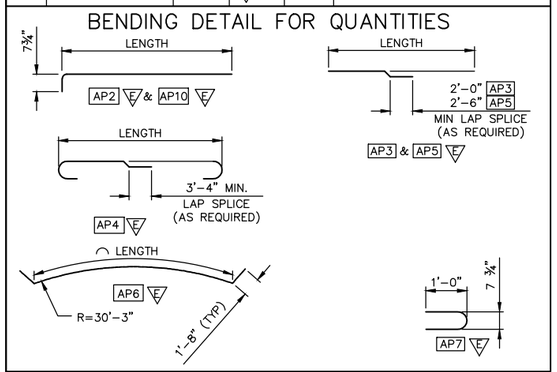

E = EPOXY COATED REINFORCING STEEL

DIMENSIONS SHOWN ARE OUT TO OUT

ALL REINFORCING BARS SHOWN ON THIS SHEET SHALL BE AASHTO M-31 UNLESS NOTED OTHERWISE.

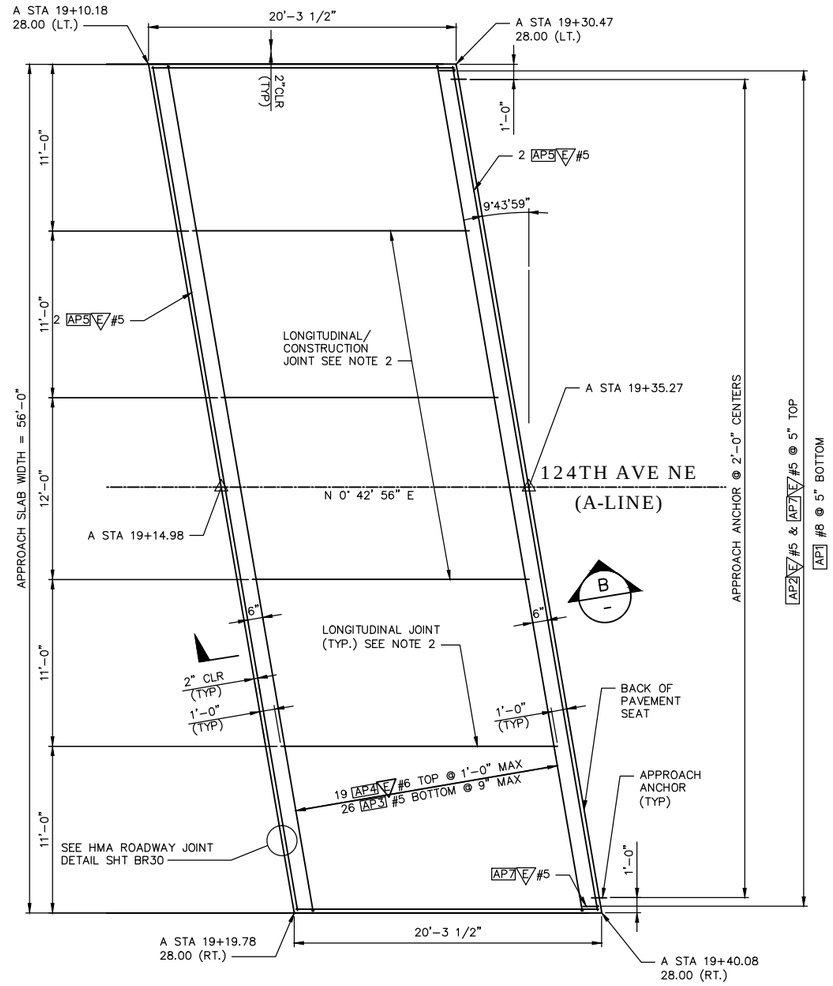

PLAN
SOUTH APPROACH SLAB

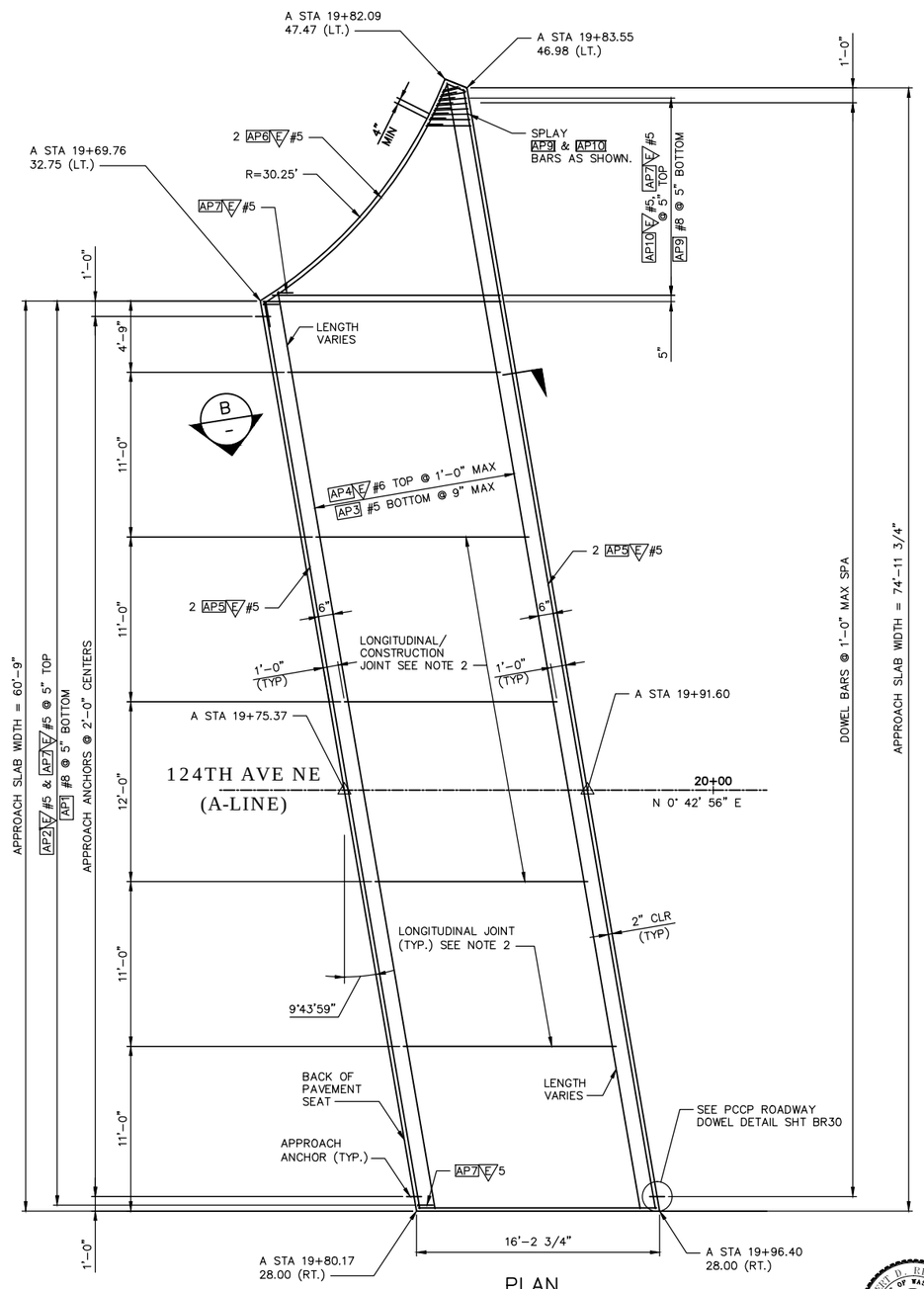

PLAN
NORTH APPROACH SLAB

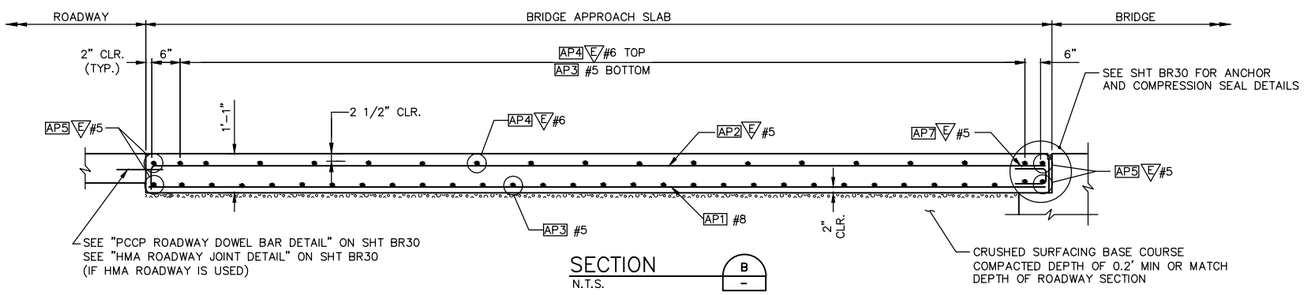

SECTION B
N.T.S.

5 2.5 0 5 10
SCALE

NO.	DATE	BY	APPR.	REVISIONS

Approved By

TRANSPORTATION DESIGN MANAGER — DATE
M. ARAKELYAN
PROJECT MANAGER — DATE

R. RICHARDSON
DESIGNED BY — DATE
J. FRYE
DRAWN BY — DATE
D. KORPI
CHECKED BY — DATE

City of Bellevue
TRANSPORTATION DEPARTMENT

HDR

124th Ave NE - NE Spring Blvd to NE Ichigo Way

BRIDGE APPROACH SLAB DETAILS 1

SHEET NAME **BR29**

SHT 192 OF 198

GENERAL NOTES:
1. UNLESS OTHERWISE NOTED, ALL DIMENSIONS ARE IN FEET AND INCHES.

95% SUBMITTAL NOT FOR CONSTRUCTION

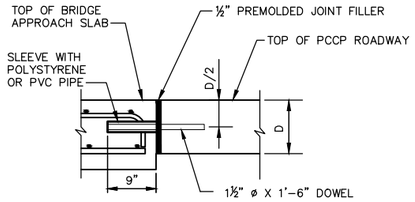

PCCP ROADWAY DOWEL BAR DETAIL
N.T.S.
INSERT DOWELS PARALLEL TO CENTER LINE ALONG TRANSVERSE CONSTRUCTION JOINT.

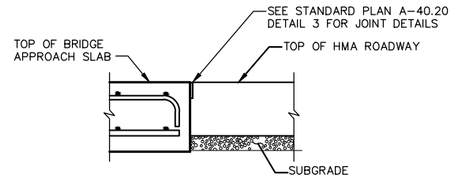

HMA ROADWAY JOINT DETAIL
N.T.S.
SAWCUT SHALL BE FILLED WITH HOT-POURED COMPONENT IN ACCORDANCE WITH STANDARD SPECIFICATION SECTION 9-04.2(1) AND SEALED IN ACCORDANCE WITH STANDARD SPECIFICATION SECTION 5-05.3(8)B.

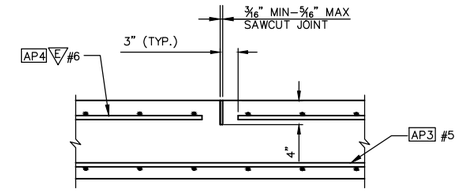

LONGITUDINAL CRACK CONTROL JOINT DETAIL
N.T.S.

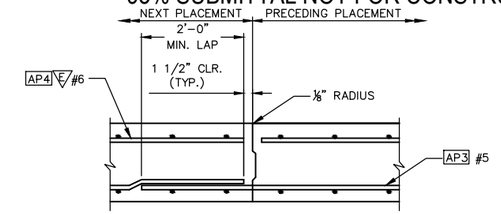

ALTERNATE LONGITUDINAL CONTROL JOINT DETAIL
N.T.S.
EDGE PRECEDING PLACEMENT ONLY WITH ⅛" RADIUS

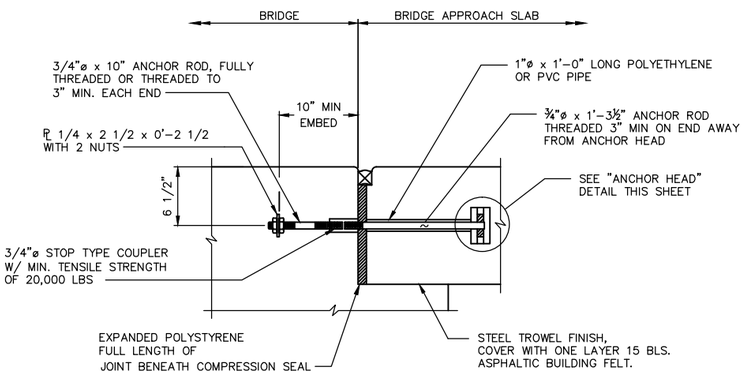

APPROACH ANCHOR – METHOD A
N.T.S.

NOTE:
ALL METAL PARTS OF APPROACH EXPANSION ANCHOR SHALL RECEIVE ONE COAT OF PAINT CONFORMING TO STANDARD SPECIFICATION 9-08.1(2)F OR BE GALVANIZED IN ACCORDANCE WITH AASHTO M232.
GAP WIDTH INSTALLATION WIDTH FOR TEMPERATURE OF STRUCTURE AT TIME OF PLACING EXPANSION JOINT.

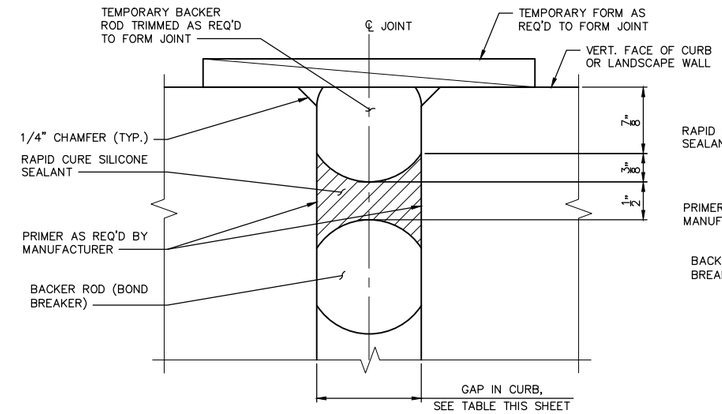

EXPANSION JOINT PLACEMENT AT VERTICAL FACE OF CURB OR LANDSCAPE WALL
N.T.S.

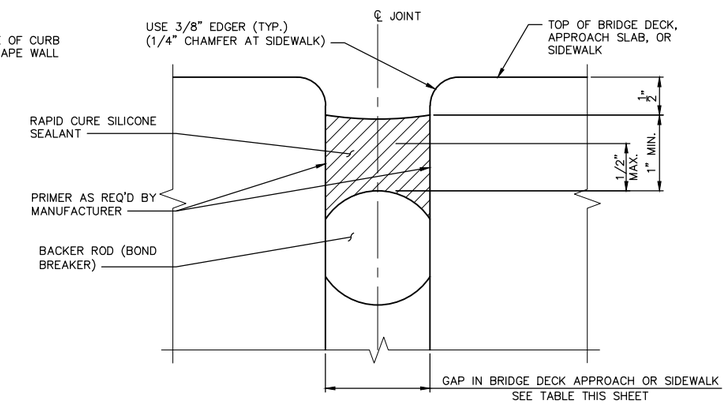

EXPANSION JOINT DETAIL
N.T.S.

GAP TABLE	
GAP WIDTH	TEMPERATURE
1 3/8"	40°
1 1/4"	64°
1 1/8"	80°

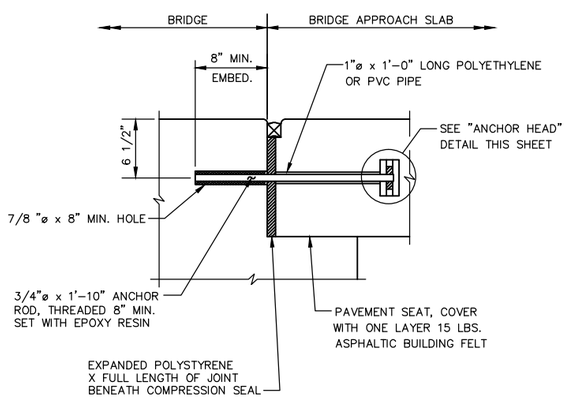

APPROACH ANCHOR – METHOD B
N.T.S.

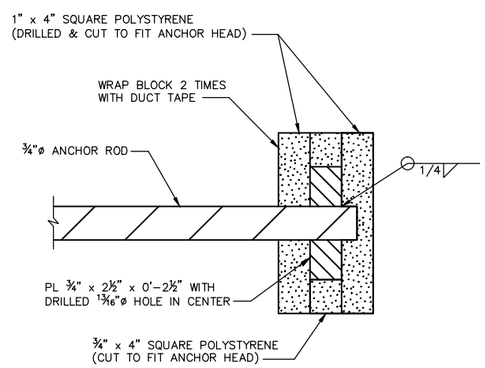

ANCHOR HEAD DETAIL
N.T.S.

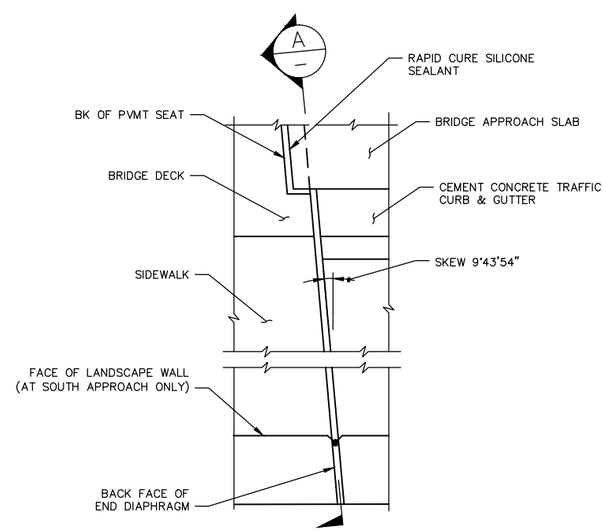

PLAN EXPANSION JOINT
N.T.S.

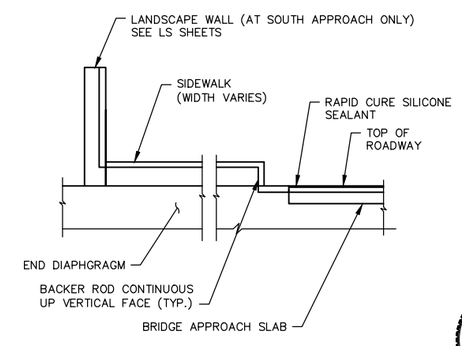

SECTION A

NO.	DATE	BY	APPR.	REVISIONS

Approved By
TRANSPORTATION DESIGN MANAGER — DATE
M. ARAKELYAN
PROJECT MANAGER — DATE

R. RICHARDSON — DESIGNED BY — DATE
J. FRYE — DRAWN BY — DATE
D. KORPI — CHECKED BY — DATE

City of Bellevue
TRANSPORTATION DEPARTMENT

124th Ave NE - NE Spring Blvd to NE Ichigo Way

BRIDGE
APPROACH SLAB DETAILS 2

SHEET NAME BR30

SHT 193 OF 198

95% SUBMITTAL NOT FOR CONSTRUCTION

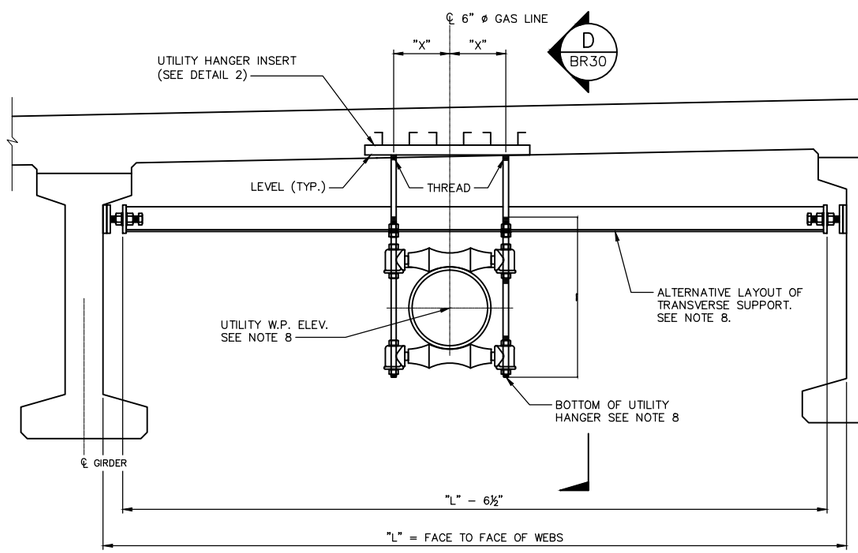

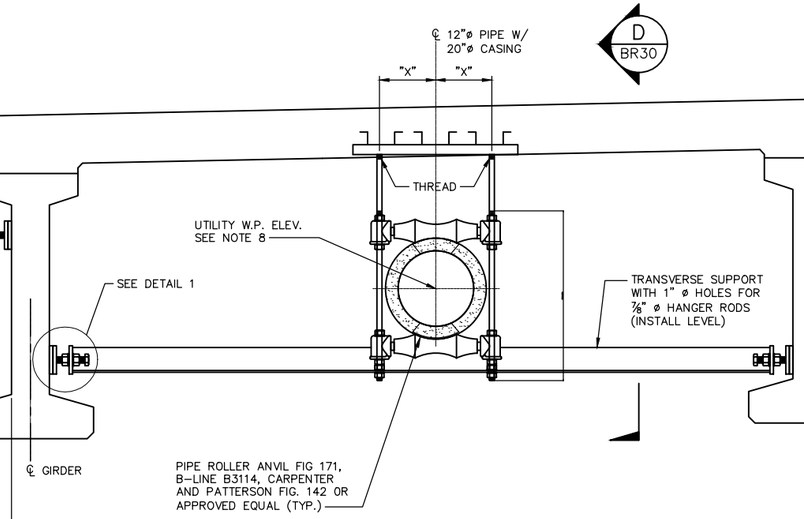

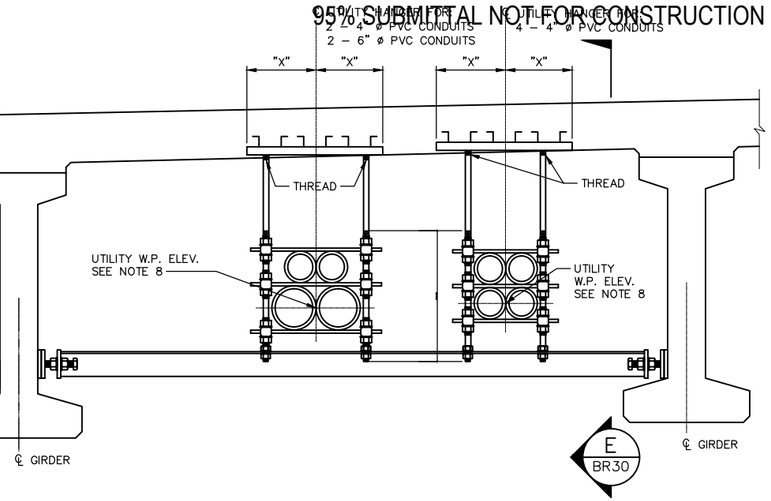

HANGER UTILITY SUPPORT DETAIL

N.T.S.

(UTILITY HANGERS LOCATION SHOWN AS SCHEMATIC ONLY. SEE ABUTMENT PLAN & ELEVATION AND FRAMING PLAN FOR LOCATION)

"X" DIMENSION DETERMINED FROM MANUFACTURER

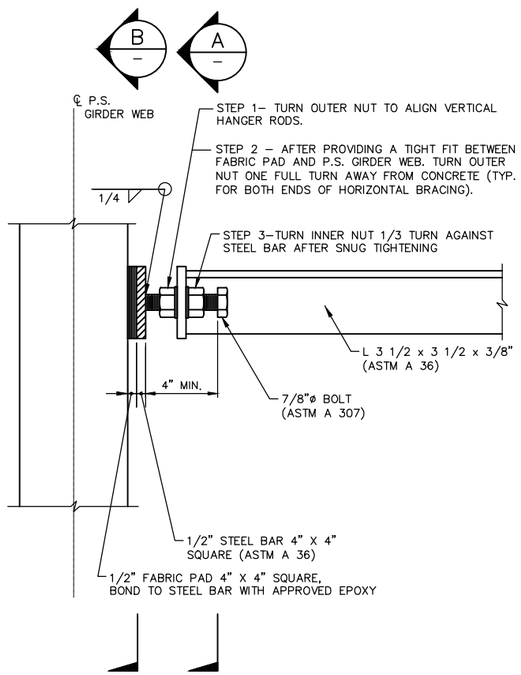

DETAIL 1

N.T.S.

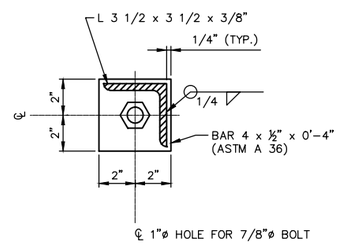

SECTION A

N.T.S.

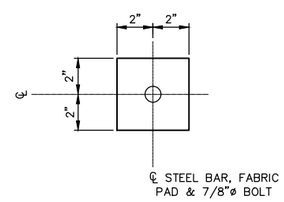

SECTION B

N.T.S.

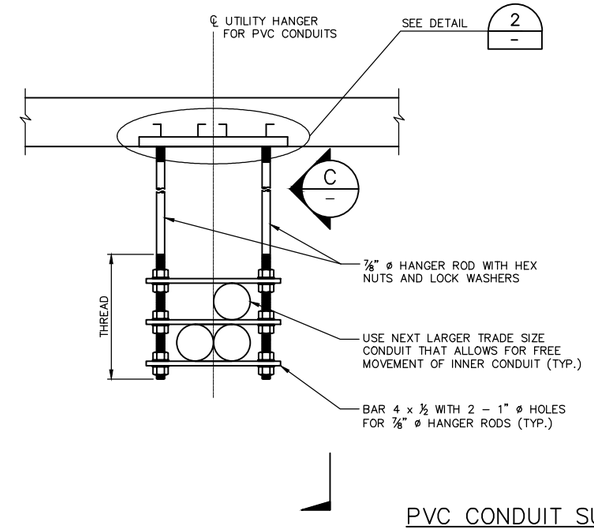

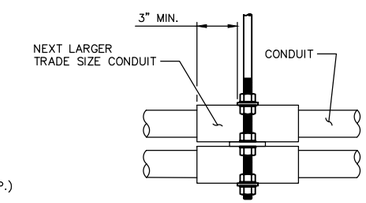

VIEW C

PVC CONDUIT SUPPORT DETAIL

N.T.S.

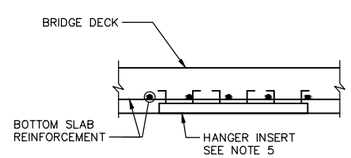

DETAIL 2

N.T.S.

GENERAL NOTES:

1. ALL MATERIALS SHALL BE GALVANIZED AFTER FABRICATION PER AASHTO M 111 OR AASHTO M 232 EXCEPT PIPE ROLLERS.
2. PAINT ROLLERS WITH THREE COATS OF GALVANIZING REPAIR PAINT. SEE STD. SPEC. 9–08.2.
3. WHERE UTILITY EXPANSION JOINTS ARE LOCATED, PROVIDE HANGER SUPPORTS AT EACH END OF JOINTS IN ACCORDANCE WITH RECOMMENDATIONS BY MANUFACTURER OF UTILITY JOINT.
4. CONTRACTOR SHALL VERIFY THE CASING DIAMETER AND PIPE ROLLS WITH UTILITIES AND ADJUST DIMENSIONS AS NECESSARY.
5. UTILITY HANGER INSERT SHALL BE EITHER COOPER B–LINE B22–I–XX, POWERSTRUT PS 349–XX, UNISTRUT P32XX, OR APPROVED EQUAL WITH SPRING NUT. HANGER SIZE (VARIABLE 'XX') SHALL BE DETERMINED BY THE CONTRACTOR & ADJUSTED TO MATCH PIPE ROLL.
6. CHASE THREADS ON HANGER ROD FOR THREAD COMPATIBILITY WITH SPRING NUT. INSERT TO BE INSTALLED LEVEL LONGITUDINALLY AND TRANSVERSELY. PLACE INSERT TO PROVIDE FOR TRANSVERSE ADJUSTMENT OF HANGER RODS. HANGER RODS SHALL NOT BE WITHIN 2" OF THE END OF THE INSERT. TWO INSERTS MAY BE USED TO ACCOMMODATE SUPER ELEVATION
7. WATER LINE INSULATION SHALL TERMINATE AT THE FACE OF END DIAPHRAGM, AND PENETRATION SEAL.
8. SEE SCHEDULE ON THE BRIDGE ABUTMENT PLAN SHEETS FOR UTILITY WORKPOINT ELEVATIONS THRU BRIDGE ABUTMENTS. PLACE TRANSVERSE SUPPORTS ABOVE UTILITIES AS NECESSARY TO FIT HANGER RODS AND PIPE ROLLERS ABOVE THE BOTTOM SOFFIT OF THE GIRDERS.
9. UTILITIES SHOWN FOR REFERENCE. FOR LOCATION ON BRIDGE SEE SHEET BR17. SEE UTILITY & DRAINAGE PLANS FOR UTILITY DETAILS.

NO.	DATE	BY	APPR.	REVISIONS

Approved By

TRANSPORTATION DESIGN MANAGER — DATE
M. ARAKELYAN
PROJECT MANAGER — DATE

R. RICHARDSON — DESIGNED BY — DATE
J. FRYE — DRAWN BY — DATE
D. KORPI — CHECKED BY — DATE

City of Bellevue
TRANSPORTATION DEPARTMENT

124th Ave NE - NE Spring Blvd to NE Ichigo Way

BRIDGE
UTILITY HANGER DETAILS 1

SHEET NAME **BR31**

95% SUBMITTAL NOT FOR CONSTRUCTION

GENERAL NOTES:

1. SEE SHEET BR36 FOR CONDUIT DEFLECTION FITTING A DETAIL.
2. FOR STEEL CASING, PROVIDE SHOP APPLIED ANTI-CORROSIVE COATING ON CASING EXTERIOR CONFORMING TO AWWA C210. MINIMUM COATING THICKNESS 16 MILS DFT (DO NOT EXCEED MANUFACTURER'S MAXIMUM THICKNESS). PRODUCT SHALL BE EQUAL TO TNEMEC HI-BUILD TNEME-TAR SERIES 46H-413.

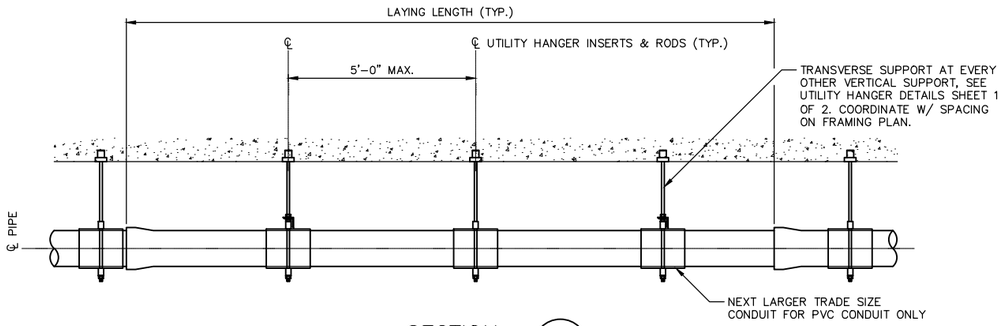

SECTION D BRXX
N.T.S.

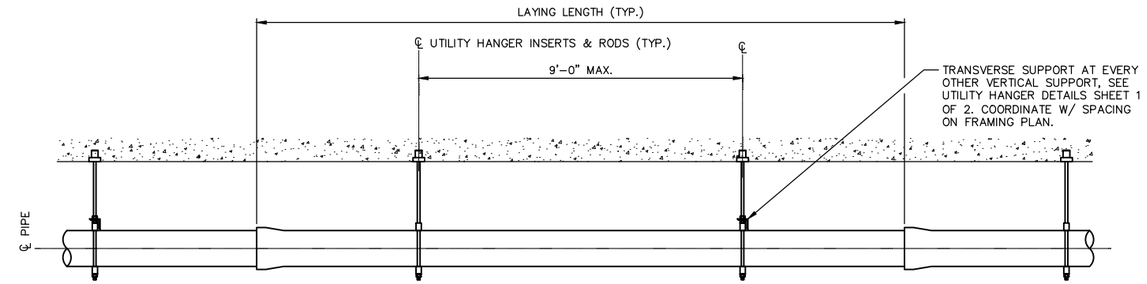

SECTION E BRXX
N.T.S.

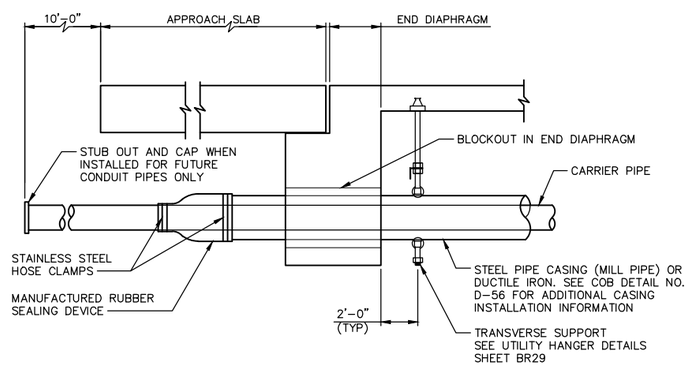

UTILITY CONDUIT PLACEMENT DETAIL (OTHER THAN PVC)
N.T.S.

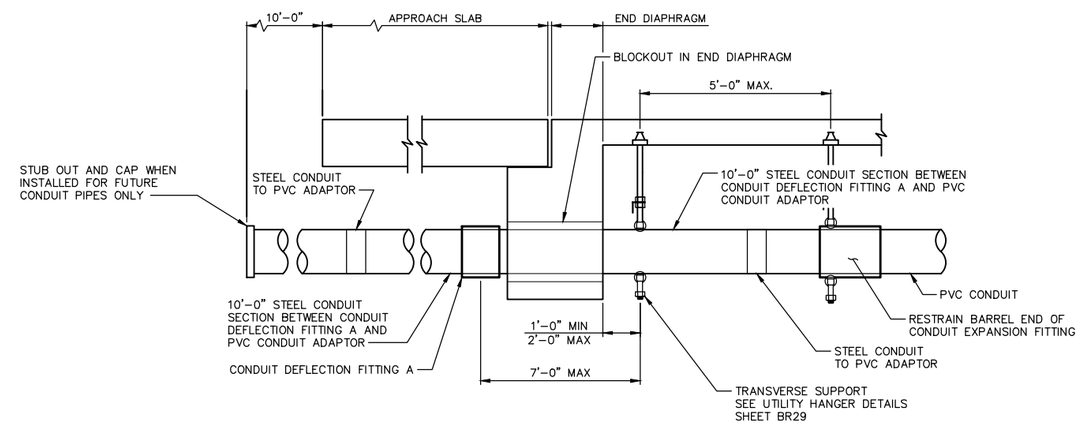

UTILITY CONDUIT PLACEMENT DETAIL (PVC)
N.T.S.

NOTES:

1. SET POSITION OF EXPANSION FITTING BASED ON MANUFACTURER RECOMMENDATIONS AND TEMPERATURE AT TIME OF INSTALLATION.
2. EXPANSION FITTINGS SHALL BE INSTALLED EVERY 100'-0" MAX. AND SHALL ACCOMMODATE 5.1 INCHES OF MOVEMENT. THE DESIGN TEMPERATURE RANGE IS 125 DEGREES (-15° TO 110°).

NO.	DATE	BY	APPR.	REVISIONS

Approved By

TRANSPORTATION DESIGN MANAGER — DATE
M. ARAKELYAN
PROJECT MANAGER — DATE

R. RICHARDSON — DESIGNED BY — DATE
J. FRYE — DRAWN BY — DATE
D. KORPI — CHECKED BY — DATE

City of Bellevue
TRANSPORTATION DEPARTMENT

124th Ave NE - NE Spring Blvd to NE Ichigo Way

BRIDGE
UTILITY HANGER DETAILS 2

SHEET NAME BR32

S = BAR IS INCLUDED IN SUBSTRUCTURE QUANTITIES
L = LUMP SUM QUANTITY
T = TRANSVERSE
OR S = SEISMIC
E = BAR IS TO BE EPOXY COATED
V = BAR DIMENSIONS VARY BETWEEN DIMENSIONS SHOWN ON THIS LINE AND THE FOLLOWING LINE.

MARK NO.	LOCATION	SIZE	NO. REQ'D	BEND TYPE	TIE OR STIR.	LUMP SUM	SUBSTR.	EPOXY COAT.	VARIES	NO. EACH	U Ft.	U In.	W Ft.	W In.	X Ft.	X In.	Y Ft.	Y In.	Z Ft.	Z In.	θ_1 DEG	θ_2 DEG	LENGTH Ft.	LENGTH In.	WEIGHT
	ABUT 1 - SHAFTS																								
1P1	SHAFT LONGITUDINAL	14	204	54			S		V	12	48	9.0											50	9.8	80405
											50	2.0											52	2.8	
1P2	SHAFT SPIRAL	6	17	67			S		V	1	3	4.0	45	1.0	0	6.0	0	0.0	0	0.0			927	6.8	24054
											3	4.0	46	6.0	0	6.0	0	0.0	0	0.0			956	8.6	
1P3	SHAFT SPIRAL TOP	6	17	67			S				3	4.0	3	0.0	0	6.0	0	0.0	0	0.0			61	8.7	1576
	ABUT 1 - PILECAP																								
101	PILECAP LONGITUDINAL - STG 1	5	20	50			S		V	10	55	9.0											55	9.0	1197
											59	0.0											59	0.0	
102	PILECAP LONGITUDINAL - STG 2	5	20	50			S		V	1	47	2.0											47	2.0	1018
											50	5.0											50	5.0	
103	PILECAP TIES (TYPICALS)	5	204	74	T		S				5	0.0	3	2.0	3	2.0							11	1.4	2365
104	PILECAP TIES	5	4	74	T		S				5	1.0	3	2.0	3	2.0							11	2.4	47
105	PILECAP END U-BAR (HORIZ)	5	10	74			S				5	0.0	2	6.0	2	6.0							9	8.9	102
106	PILECAP END U-BAR (VERT)	5	14	74			S				3	8.0	2	6.0	2	6.0							8	4.9	123
107	HINGE BARS	8	49	54			S				4	8.0											5	9.5	758
108	CURTAIN WALL U-BAR		4	2	74							1 2.0		1 10.0		1 10.0								4 7.5	3
109	CURTAIN WALL		4	4	50				V	2		3 2.5												3 2.5	
											4	1.5											4	1.5	
110	TIES (TYP.)	4	148	58	T						5	0.0											5	7.9	559
	ABUT 1 - END DIAPHRAGM																								
121	LONG. TYP - STG 1	5	12	50					V	6	51	3.0											51	3.0	662
											54	6.0											54	6.0	
122	LONG. TYP - STG 2	5	12	50					V	6	41	1.3											41	1.3	535
											44	4.3											44	4.3	
123	FF LONG. - STG 1	5	4	50					V	2	47	1.0											47	1.0	203
											50	4.0											50	4.0	
124	FF LONG. - STG 2	5	4	50					V	2	37	9.3											37	9.3	164
											41	0.3											41	0.3	
125	FF BOTTOM LONG.	5	1	89							93	1.0	2	6.0									95	7.0	100
128	TOP LONGIT. (LONG) STG 1	6	2	50				E			55	1.0											55	1.0	165
128	TOP LONGIT. (SHORT) STG 1	6	1	50				E			51	6.0											51	6.0	77
129	TOP LONGIT. (LONG) STG 2	6	1	50				E			44	4.3											44	4.3	67
129	TOP LONGIT. (SHORT) STG 2	6	2	50				E			40	9.2											40	9.2	122
130	TOP LONG.	6	1	50				E			15	6.8											15	6.8	23
131	TOP LONG.	6	1	50				E			20	6.5											20	6.5	31
133	BF VERTICAL (@ PVMT SEAT)	5	56	72	T						2	8.5	3	3.5	0	0.0							6	4.3	371
134	BF VERTICAL	5	31	72	T						2	8.5	4	5.0	0	0.0							7	5.8	242
135	STIRRUP (TYP)	5	87	72	T						1	10.5	4	2.5	4	2.5							11	0.0	998
136	STIRRUP (@ GIRDERS)	5	18	72	T						0	10.3	4	2.5	4	2.5							9	11.8	187
137	TIES (TYP)	4	129	58	T						2	8.5											3	4.4	290
138	TIES (@ GIRDER)	4	36	58	T						1	8.5											2	4.4	57
139	TOP TIES	4	87	58	T						2	8.5											3	4.4	196
140	END VERT C-BARS	5	8	74							4	4.0	2	6.0	2	6.0							9	0.9	76
	ABUT 1 - WINGWALL - EAST																								
141	SE WW - VERT. (TYP)	4	38	50					V	2	1	8.0											1	8.0	77
											4	4.7											4	4.7	
142	SE WW - FF END DIAPH.	6	6	80							3	9.2	3	11.5	1	0.0	0	3.0	0	3.0	159	80	8	6.0	77
143	SE WW - BF END DIAPH.	6	6	80							4	0.0	3	3.0	1	0.0	0	3.0	0	3.0	160	80	8	0.3	72
144	SE WW - HORIZONTAL (TYP)	5	10	50					V	2	15	6.0											15	6.0	117
											7	0.0											7	0.0	
145	SE WW - CHAMFER	6	7	80							4	0.0	2	0.0	2	0.0	0	3.0	0	3.0	120	120	7	10.6	83
146	SE WW - BOT. HORIZONTAL	5	2	50							15	10.0											15	10.0	33
147	SE WW - TOP HORIZONTAL	5	2	50							17	5.0											17	5.0	36
	ABUT 1 - WINGWALL - WEST																								
148	SW WW - VERTICAL	4	22	50				E	V	2	1	8.0											1	8.0	45
											4	5.0											4	5.0	
149	SW WW - FF END DIAPH.	5	7	80							5	6.0	0	0.0	1	0.0	0	3.0	0	3.0		100	6	4.7	47
150	SW WW - BF END DIAPH.	5	7	80							5	7.5	0	0.0	1	0.0	0	3.0	0	3.0		100	6	6.2	48
151	SW WW - HORIZ. (TYP)	5	12	50					V	2	3	6.0											3	6.0	81
											9	5.5											9	5.5	
152	SW WW - CHAMFER	5	6	80							5	0.0	2	0.0	2	0.0	0	3.0	0	3.0	140	140	8	11.4	56
153	SW WW - CHAMFER VERTICAL	4	3	50							4	5.0											4	5.0	9

S = BAR IS INCLUDED IN SUBSTRUCTURE QUANTITIES
L = LUMP SUM QUANTITY
T = TRANSVERSE
OR S = SEISMIC
E = BAR IS TO BE EPOXY COATED
V = BAR DIMENSIONS VARY BETWEEN DIMENSIONS SHOWN ON THIS LINE AND THE FOLLOWING LINE.

MARK NO.	LOCATION	SIZE	NO. REQ'D	BEND TYPE	TIE OR STIR.	LUMP SUM	SUBSTR.	EPOXY COAT.	VARIES	NO. EACH	U Ft.	U In.	W Ft.	W In.	X Ft.	X In.	Y Ft.	Y In.	Z Ft.	Z In.	θ_1 DEG	θ_2 DEG	LENGTH Ft.	LENGTH In.	WEIGHT
	ABUT 1 - BLOCKOUT BARS																								
161A	UTIL A - OPENING	5	4	80							1	8.0	2	11.0	2	11.0	0	3.0	0	3.0	135	135	7	5.3	31
161B	UTIL B - OPENING	5	4	80							0	4.0	2	2.0	2	2.0	0	3.0	0	3.0	135	135	4	7.3	19
161C	UTIL C - OPENING	5	4	80							1	8.0	2	11.0	2	11.0	0	3.0	0	3.0	135	135	7	5.3	31
161D	UTIL D - OPENING	5	4	80							1	1.0	2	5.0	2	5.0	0	3.0	0	3.0	135	135	5	10.3	24
161E	UTIL E - OPENING	5	4	80							0	9.0	2	0.0	2	0.0	0	3.0	0	3.0	135	135	4	8.3	20
161F	UTIL F - OPENING	5	4	80							1	6.0	2	11.0	2	11.0	0	3.0	0	3.0	135	135	7	3.3	30
161G	UTIL G - OPENING	5	4	80							0	9.0	2	4.0	2	4.0	0	3.0	0	3.0	135	135	5	4.3	22
162A	UTIL A - BOT. TRANSV.	5	2	74							2	8.5	0	6.0	0	6.0							3	5.4	7
162B	UTIL B - BOT. TRANSV.	5	2	74							2	8.5	1	11.8	1	11.8							6	4.9	13
162C	UTIL C - BOT. TRANSV.	5	2	74							2	8.5	1	1.8	1	1.8							4	8.9	10
162D	UTIL D - BOT. TRANSV.	5	2	74							2	8.5	1	5.8	1	5.8							5	4.9	11
162E	UTIL E - BOT. TRANSV.	5	2	74							2	8.5	1	7.0	1	7.0							5	7.4	12
162F	UTIL F - BOT. TRANSV.	5	2	74							2	8.5	1	2.8	1	2.8							4	10.9	10
162G	UTIL G - BOT. TRANSV.	5	2	74							2	8.5	1	7.0	1	7.0							5	7.4	12
163A	UTIL A - TOP STIRRUP	5	1	72	T						2	8.5	1	9.5	1	9.2							6	11.7	7
163B	UTIL B - TOP STIRRUP	5	1	72	T						1	10.5	1	5.5	1	5.5							5	6.0	6
163C	UTIL C - TOP STIRRUP	5	1	72	T						1	10.5	1	1.5	1	1.5							4	10.0	5
163D	UTIL D - TOP STIRRUP	5	1	72	T						1	10.5	1	11.5	1	11.5							6	6.0	7
163E	UTIL E - TOP STIRRUP	5	1	72	T						1	10.5	2	0.5	2	0.5							6	8.0	7
163F	UTIL F - TOP STIRRUP	5	1	72	T						1	10.5	1	0.8	1	0.8							4	8.5	5
163G	UTIL G - TOP STIRRUP	5	1	72	T						2	8.5	2	0.5	2	0.5							7	6.0	8
164B	UTIL B - TOP C-BAR	5	1	74	T						0	6.0	1	11.5	1	11.5							4	2.4	4
164D	UTIL D - TOP C-BAR	5	1	74	T						1	0.0	1	11.5	1	11.5							4	8.4	5
164E	UTIL E - TOP C-BAR	5	1	74	T						1	0.8	1	11.5	1	11.5							4	9.2	5
	ABUT 1 - APPROACH SLAB																								
1AP1	LONGITUDINAL BOTTOM	8	135	50							19	11.5											19	11.5	7193
1AP2	LONGITUDINAL TOP	5	135	74				E			19	11.5	0	7.8	0	0.0							20	5.7	2883
1AP3	TRANSVERSE BOTTOM	5	26	50							56	5.8											56	5.8	1532
1AP4	TRANSVERSE TOP	6	19	52				E			56	5.8											57	10.3	1651
1AP5	TRANSVERSE END	5	4	50				E			56	5.8											56	5.8	236
1AP7	END U-BAR	5	135	71				E			0	7.8	1	0.0	1	0.0							2	3.5	322
	ABUT 2 - SHAFTS																								
2P1	SHAFT LONGITUDINAL	14	204	54			S		V	12	47	11.0											49	11.8	79234
											49	6.0											51	6.8	
2P2	SHAFT SPIRAL	6	17	67			S		V	1	3	4.0	44	2.0	0	6.0	0	0.0	0	0.0			908	8.5	23617
											3	4.0	45	9.0	0	6.0	0	0.0	0	0.0			941	3.4	
2P3	SHAFT SPIRAL TOP	6	17	67			S				3	4.0	3	0.0	0	6.0	0	0.0	0	0.0			61	8.7	1576
	ABUT 2 - PILECAP																								
201	PILECAP LONGITUDINAL - STG 1	5	20	50			S		V	10	55	9.0											55	9.0	1197
											59	0.0											59	0.0	
202	PILECAP LONGITUDINAL - STG 2	5	20	50			S		V	10	47	2.0											47	2.0	1018
											50	5.0											50	5.0	
203	PILECAP TIES (TYPICALS)	5	204	74	T		S				5	0.0	3	2.0	3	2.0							11	1.4	2365
204	PILECAP TIES	5	4	74	T		S				5	1.0	3	2.0	3	2.0							11	2.4	47
205	PILECAP END U-BAR (HORIZ)	5	10	74			S				5	0.0	2	6.0	2	6.0							9	8.9	102
206	PILECAP END U-BAR (VERT)	5	14	74			S				3	8.0	2	6.0	2	6.0							8	4.9	123
207	HINGE BARS	8	50	54			S				4	8.0											5	9.5	773
208	CURTAIN WALL U-BAR		4	8	74							1 2.0		1 10.0		1 10.0								4 7.5	25
209	CURTAIN WALL		4	2	50				V	1		3 2.5												3 2.5	5
											4	1.5											4	1.5	
210	TIES (TYP.)	4	148	50	T						5	0.0											5	0.0	494

95% SUBMITTAL NOT FOR CONSTRUCTION

BENDING DIAGRAMS

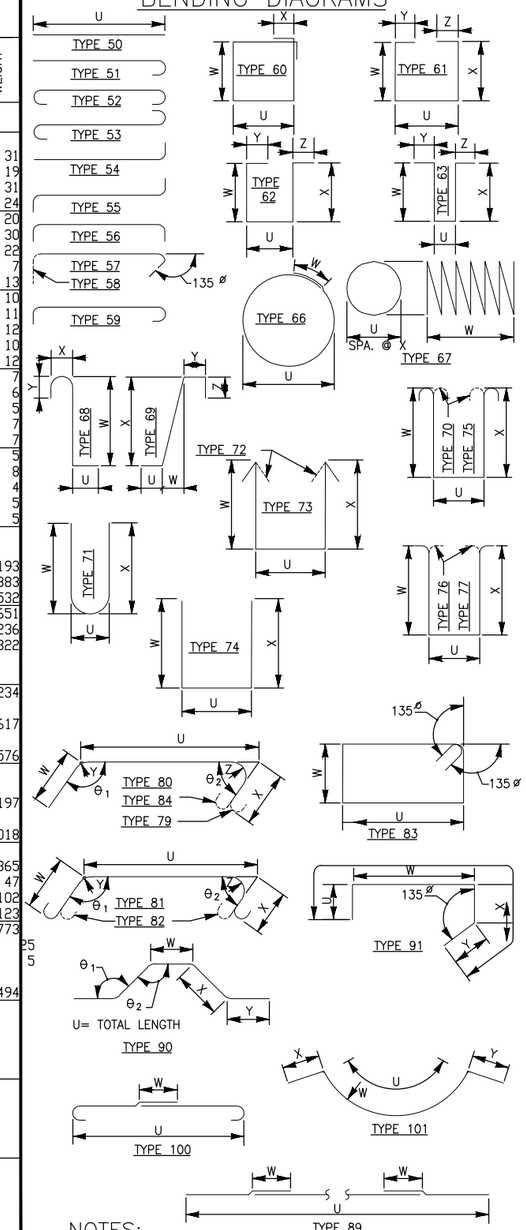

NOTES:

1. SEE SHT S31 FOR ADDITIONAL DETAILS FOR BARRIER AND SIDEWALK.
2. SEE SHT S32 FOR ADDITIONAL DETAILS FOR APPROACH SLAB.
3. BEND FOR TRANSVERSE BARS DUE TO ROADWAY CROWN CONDITIONS HAVE NOT BEEN SHOWN. THESE BARS SHALL BE BENT AS REQUIRED TO CONFORM TO THE CONFIGURATION OF THE STRUCTURE.

NO.	DATE	BY	APPR.	REVISIONS

Approved By

TRANSPORTATION DESIGN MANAGER — DATE
M. ARAKELYAN
PROJECT MANAGER — DATE

R. RICHARDSON
DESIGNED BY — DATE
J. FRYE
DRAWN BY — DATE
CHECKED BY — DATE

City of Bellevue
TRANSPORTATION DEPARTMENT

HDR

124th Ave NE - NE Spring Blvd to NE Ichigo Way

BRIDGE BAR LIST

SHEET NAME **BR33**

SHT 196 OF 198

S = BAR IS INCLUDED IN SUBSTRUCTURE QUANTITIES
L = LUMP SUM QUANTITY
T = TRANSVERSE
OR S = SEISMIC
E = BAR IS TO BE EPOXY COATED
V = BAR DIMENSIONS VARY BETWEEN DIMENSIONS SHOWN ON THIS LINE AND THE FOLLOWING LINE.

MARK NO.	LOCATION	SIZE	NO. REQ'D	BEND TYPE	TIE OR STIR.	LUMP SUM	SUBSTR.	EPOXY COAT.	VARIES	NO. EACH	U Ft.	U In.	W Ft.	W In.	X Ft.	X In.	Y Ft.	Y In.	Z Ft.	Z In.	θ_1 DEG	θ_2 DEG	LENGTH Ft.	LENGTH In.	WEIGHT
	ABUT 2 - END DIAPHRAGM																								
221	LONG. TYP - STG 1	5	12	50					V	6	51	3.0											51	3.0	662
											54	6.0											54	6.0	
222	LONG. TYP - STG 2	5	12	50					V	6	44	4.8											44	4.8	576
											47	7.8											47	7.8	
223	FF LONG. - STG 1	5	4	50					V	2	47	1.0											47	1.0	203
											50	4.0											50	4.0	
224	FF LONG. - STG 2	5	4	50					V	2	40	6.5											40	6.5	176
											43	9.5											43	9.5	
225	FF BOTTOM LONG.	5	1	89							95	10.5	2	6.0									98	4.5	103
226	END U-BARS	5	6	74							2	8.0	2	6.0	2	6.0							7	4.9	46
228	TOP LONGIT. (LONG) STG 1	6	2	50				E			55	1.0											55	1.0	165
228	TOP LONGIT. (SHORT) STG 1	6	1	50				E			51	6.0											51	6.0	77
229	TOP LONGIT. (LONG) STG 2	6	1	50				E			47	7.8											47	7.8	72
229	TOP LONGIT. (SHORT) STG 2	6	2	50				E			44	1.0											44	1.0	132
230	TOP LONG. BAR	6	1	50				E			15	4.7											15	4.7	23
231	TOP LONG. BAR	6	1	50							18	6.3											18	6.3	28
233	BF VERTICAL (@ PVMT SEAT)	5	60	72	T						2	8.5	3	5.0	0	0.0							6	5.8	406
234	BF VERTICAL	5	30	72	T						2	8.5	4	3.5	0	0.0							7	4.3	230
235	STIRRUP (TYP)	5	90	72	T						1	10.5	4	2.5	4	2.5							11	0.0	1033
236	STIRRUP (@ GIRDERS)	5	18	72	T						0	10.3	4	2.5	4	2.5							9	11.8	187
237	TIES (TYP)	4	135	58	T						2	8.5											3	4.4	304
238	TIES (@ GIRDER)	4	36	58	T						1	8.3											2	4.2	56
239	TOP TIES (TYP)	4	90	58	T						2	8.5											3	4.4	202
240	END VERT C-BARS	5	8	74							4	4.0	2	6.0	2	6.0							9	0.9	76
	ABUT 2 - WINGWALL - WEST																								
241	NW WW - VERTICAL (TYP)	5	26	50					V	2	1	8.0											1	8.0	82
											4	4.5											4	4.5	
241	NW WW - VERT	5	1	50							4	4.5											4	4.5	5
242	NW WW - END DIAPH.	5	14	54							5	2.0											5	10.5	86
243	NW WW - HORIZ. BF	5	6	50					V	1	14	3.7											14	3.7	68
											7	5.0											7	5.0	
244	NW WW - HORIZ. FF	5	6	50					V	1	11	3.8											11	3.8	49
											4	5.0											4	5.0	
245	NW WW - HORIZ. BOTTOM	5	2	50							11	8.0											11	8.0	24
	ABUT 2 - WINGWALL - EAST																								
246	NE WW - VERT (TYP)	4	22	50				E	V	2	1	8.0											1	8.0	45
											4	5.0											4	5.0	
247	NE WW - FF END DIAPH.	5	7	80							5	6.0	1	0.0	0	0.0	0	3.0	0	0.0	100		6	4.7	47
248	NE WW - FB END DIAPH.	5	7	80							5	7.5	1	0.0	0	0.0	0	3.0	0	0.0	100		6	6.2	48
249	NE WW - HORIZ. (TYP)	5	22	50					V	2	9	9.3											9	9.3	160
											4	2.0											4	2.0	
250	NE WW - CHAMFER	5	7	80							5	0.0	2	0.0	2	0.0	0	3.0	0	3.0	140	140	8	11.4	65
251	NE WW - CHAMFER VERT.	4	2	50							4	4.5											4	4.5	6
252	NE WW - HORIZ. BOTTOM	5	2	50							10	1.0											10	1.0	21
	ABUT 2 - BLOCKOUT BARS																								
261A	UTIL A - OPENING	5	4	80							1	8.0	2	11.0	2	11.0	0	3.0	0	3.0	135	135	7	5.3	31
261B	UTIL B - OPENING	5	4	80							0	4.0	2	2.0	2	2.0	0	3.0	0	3.0	135	135	4	7.3	19
261C	UTIL C - OPENING	5	4	80							1	8.0	2	11.0	2	11.0	0	3.0	0	3.0	135	135	7	5.3	31
261D	UTIL D - OPENING	5	4	80							1	1.0	2	5.0	2	5.0	0	3.0	0	3.0	135	135	5	10.3	24
261E	UTIL E - OPENING	5	4	80							0	9.0	2	0.0	2	0.0	0	3.0	0	3.0	135	135	4	8.3	20
261F	UTIL F - OPENING	5	4	80							1	6.0	2	11.0	2	11.0	0	3.0	0	3.0	135	135	7	3.3	30
261G	UTIL G - OPENING	5	4	80							0	9.0	2	4.0	2	4.0	0	3.0	0	3.0	135	135	5	4.3	22
262A	UTIL A - BOT. TRANSV.	5	2	74							2	8.5	1	2.5	1	2.5							4	10.4	10
262B	UTIL B - BOT. TRANSV.	5	2	74							2	8.5	2	0.3	2	0.3							6	5.9	14
262C	UTIL C - BOT. TRANSV.	5	2	74							2	8.5	1	2.3	1	2.3							4	9.9	10
262D	UTIL D - BOT. TRANSV.	5	2	74							2	8.5	1	6.3	1	6.3							5	5.9	11
262E	UTIL E - BOT. TRANSV.	5	2	74							2	8.5	1	7.3	1	7.3							5	7.9	12
262F	UTIL F - BOT. TRANSV.	5	2	74							2	8.5	0	8.8	0	8.8							3	10.9	8
262G	UTIL G - BOT. TRANSV.	5	2	74							2	8.5	1	7.3	1	7.3							5	7.9	12
263A	UTIL A - TOP STIRRUP	5	1	72	T						2	8.5	1	0.8	1	0.8							5	6.5	6
263B	UTIL B - TOP STIRRUP	5	1	72	T						1	10.5	1	5.3	1	5.3							5	5.5	6
263C	UTIL C - TOP STIRRUP	5	1	72	T						1	10.5	1	1.3	1	1.3							4	9.5	5
263D	UTIL D - TOP STIRRUP	5	1	72	T						1	10.5	1	11.3	1	11.3							6	5.5	7
263E	UTIL E - TOP STIRRUP	5	1	72	T						1	10.5	2	0.3	2	0.3							6	7.5	7
263F	UTIL F - TOP STIRRUP	5	1	72	T						1	10.5	1	6.8	1	6.8							5	8.5	6
263G	UTIL G - TOP STIRRUP	5	1	72	T						2	8.5	2	0.3	2	0.3							7	5.5	8
264B	UTIL B - TOP C-BAR	5	1	74	T						0	5.5	1	11.5	1	11.5							4	1.9	4
264D	UTIL D - TOP C-BAR	5	1	74	T						0	11.5	1	11.5	1	11.5							4	7.9	5
264E	UTIL E - TOP C-BAR	5	1	74	T						1	0.5	1	11.5	1	11.5							4	8.9	5
264F	UTIL F - TOP C-BAR	5	1	74	T						0	7.0	1	11.5	1	11.5							4	3.4	4

S = BAR IS INCLUDED IN SUBSTRUCTURE QUANTITIES
L = LUMP SUM QUANTITY
T = TRANSVERSE
OR S = SEISMIC
E = BAR IS TO BE EPOXY COATED
V = BAR DIMENSIONS VARY BETWEEN DIMENSIONS SHOWN ON THIS LINE AND THE FOLLOWING LINE.

MARK NO.	LOCATION	SIZE	NO. REQ'D	BEND TYPE	TIE OR STIR.	LUMP SUM	SUBSTR.	EPOXY COAT.	VARIES	NO. EACH	U Ft.	U In.	W Ft.	W In.	X Ft.	X In.	Y Ft.	Y In.	Z Ft.	Z In.	θ_1 DEG	θ_2 DEG	LENGTH Ft.	LENGTH In.	WEIGHT
	ABUT 2 - APPROACH SLAB																								
2AP1	LONGITUDINAL BOTTOM TYPICAL	8	146	50							15	10.8											15	10.8	6198
2AP2	LONGITUDINAL TOP TYPICAL	5	146	74				E			15	10.8	0	7.8	0	0.0							16	5.0	2500
2AP3	TRANSVERSE BOTTOM	5	22	89					V	1	61	4.0	2	0.0									63	4.0	1618
											75	9.0	2	0.0									77	9.0	
2AP5	TRANSVERSE END	5	4	89				E	V	2	61	4.0	2	6.0									63	10.0	296
											75	9.0	2	6.0									78	3.0	
2AP7	END U-BAR	5	180	71				E			0	7.8	1	0.0	1	0.0							2	3.5	430
2AP9	LONGITUDINAL BOTTOM	8	34	50					V	1	1	10.0											1	10.0	783
											15	5.0											15	5.0	
AP10	LONGITUDINAL TOP	5	34	74				E	V	1	1	10.0	0	7.8	0	0.0							2	4.2	324
											15	5.0	0	7.8	0	0.0							15	11.2	
	BRIDGE - DECK REINF.																								
501	TOP TRANSV. TYP - STG 1	7	67	51				E			53	1.8											53	11.4	7388
502	TOP TRANSV. TYP - STG 2	7	67	51				E			42	3.0											43	0.6	5896
503	BOT TRANSV. TYP. - STG 1	7	45	50				E			55	0.3											55	0.3	5061
504	BOT TRANSV. TYP. - STG 2	7	45	50				E			44	4.3											44	4.3	4080
505	TOP TRANSV. - STG 1	7	14	51				E			55	2.3											55	11.9	1602
506	TOP TRANSV. - STG 2	7	14	51				E	V	1	42	3.8											43	1.4	1281
507	BOT TRANSV. - STG 1	7	10	50				E			55	2.3											55	2.3	1128
508	BOT TRANSV. - STG 2	7	10	50				E	V	1	42	3.8											42	3.8	898
											45	6.5											45	6.5	
509	LONGIT. TOP	5	104	50				E			39	9.3											39	9.3	4314
510	LONGIT. BOTTOM	5	188	50				E			39	9.3											39	9.3	7798
511	TRANSVERSE	7	2	51				E			15	4.8											16	2.4	66
512	TRANSVERSE	7	2	51				E			20	6.5											21	4.1	87
513	TRANSVERSE	7	2	50				E			18	6.3											18	6.3	76
514	TRANSVERSE	7	2	50				E			14	8.8											14	8.8	60
519	CORNER LONG.	5	4	50				E	V	1	21	0.0											21	0.0	67
											11	0.0											11	0.0	
	BRIDGE - BARRIER REINF.																								
S1	BARRIER FF - WINGWALL	5	1	50				E			4	2.0											4	2.0	4
S2	BARRIER BF - WINGWALL	4	1	50							3	0.0											3	0.0	2
S3	BARRIER FF	5	1	74				E			1	0.0	2	6.0	0	0.0							3	4.4	4
S4	BARRIER BF	4	1	74							1	0.0	1	10.0	0	0.0							2	8.8	2
	BRIDGE - SIDEWALK REINF.																								

95% SUBMITTAL NOT FOR CONSTRUCTION

BENDING DIAGRAMS

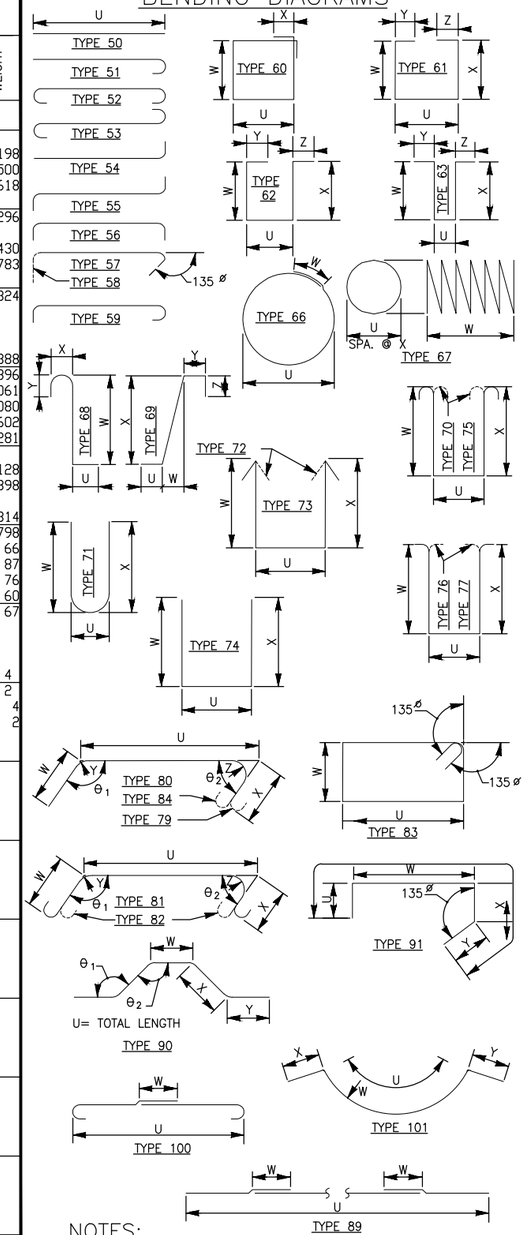

NOTES:

1. SEE SHT S31 FOR ADDITIONAL DETAILS FOR BARRIER AND SIDEWALK.
2. SEE SHT S32 FOR ADDITIONAL DETAILS FOR APPROACH SLAB.
3. BEND FOR TRANSVERSE BARS DUE TO ROADWAY CROWN CONDITIONS HAVE NOT BEEN SHOWN. THESE BARS SHALL BE BENT AS REQUIRED TO CONFORM TO THE CONFIGURATION OF THE STRUCTURE.

NO.	DATE	BY	APPR.	REVISIONS

Approved By

TRANSPORTATION DESIGN MANAGER — DATE
M. ARAKELYAN
PROJECT MANAGER — DATE

R. RICHARDSON — DESIGNED BY — DATE
J. FRYE — DRAWN BY — DATE
CHECKED BY — DATE

City of Bellevue
TRANSPORTATION DEPARTMENT

HDR

124th Ave NE - NE Spring Blvd to NE Ichigo Way

BRIDGE BAR LIST

SHEET NAME **BR34**

SHT 197 OF 198

GENERAL NOTES:
1. UNLESS OTHERWISE NOTED, ALL DIMENSIONS ARE IN FEET.

95% SUBMITTAL NOT FOR CONSTRUCTION

LEGEND:

- POST MOUNTED SIGN
- TYPE III BARRICADE
- TRAFFIC BARRIER DRUM
- PEDESTRIAN & VEHICLE DETOUR ROUTE

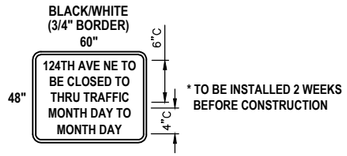

SPECIAL SIGN 1 DETAIL

SPECIAL SIGN 2 DETAIL

SIGN QUANTITIES	
SIGN	QUANTITY
M4-9 MOD	4
M4-9L	2
M4-9R	2
M4-10L	1
M4-10R	1
R11-4	2
W20-1	2
W20-2	6
W20-3	2
SPECIAL 1	2
SPECIAL 2	2

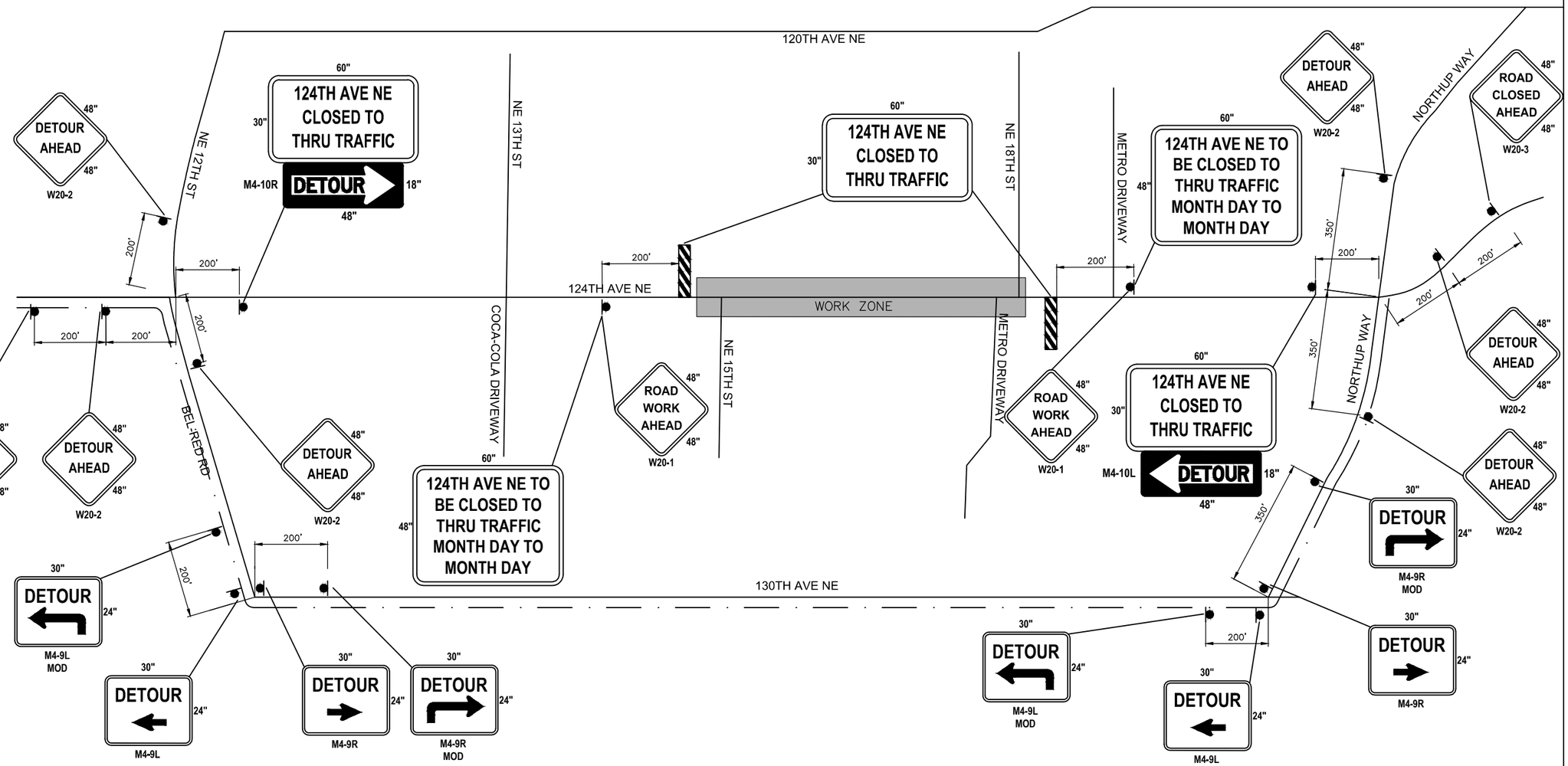

NOT TO SCALE

DETOUR PLAN NOTES:

1. SIGNS SHALL BE MOUNTED AT A MINIMUM HEIGHT OF 7 FEET; MEASURED FROM THE BOTTOM OF THE SIGN TO THE NEAR EDGE OF PAVEMENT.
2. SIGNS SHALL BE PLACED SO EDGE OF SIGN IS 2 TO 6 FEET FROM THE EDGE OF THE PAVEMENT OR AS DIRECTED BY THE ENGINEER.
3. EACH SIGN SHALL BE MOUNTED ON ITS OWN 4" X 4" WOOD POST. POST EMBEDMENT SHALL BE A MINIMUM OF 30 INCHES.
4. ALL SIGN FACE AND BARRICADE FACE MATERIAL SHALL CONSIST OF HIGH INTENSITY PRISMATIC SHEETING OF APPROVED EQUAL.
5. 10 DAYS PRIOR TO THE CLOSURE OF 124TH AVE NE, THE CONTRACTOR SHALL FURNISH AND INSTALL ADVANCE CLOSURE SIGNS AS SHOWN ON THE PLAN. ALL SIGNS ARE TO BE TURNED, COVERED, OR BAGGED UNTIL NEEDED. ADDITIONALLY, ANY TIME WORK IS SUSPENDED, SIGNS THAT ARE NOT ACCURATE TO ACTUAL SITE CONDITIONS MUST BE TURNED, COVERED, OR BAGGED.
6. NO ROAD CLOSURES WILL BE ALLOWED UNTIL THE SIGNING PLACEMENT AND INSTALLATION HAS BEEN INSPECTED AND REVIEWED BY THE ENGINEER.

PAUL A. FERRER
STATE OF WASHINGTON
43172
REGISTERED
PROFESSIONAL ENGINEER

NO.	DATE	BY	APPR.	REVISIONS

Approved By

TRANSPORTATION DESIGN MANAGER — DATE
M. ARAKELYAN
PROJECT MANAGER — DATE

S. HAYS
DESIGNED BY — DATE
J. FRYE
DRAWN BY — DATE
CHECKED BY — DATE

City of Bellevue
TRANSPORTATION DEPARTMENT

HDR

124th Ave NE - NE Spring Blvd to NE Ichigo Way

124TH AVE NE DETOUR PLAN

SHEET NAME DET1

SHT 198 OF 198

Attachment 2

90% SUBMITTAL NOT FOR CONSTRUCTION

ABBREVIATIONS:

CONC – CONCRETE
LT – LEFT
RT – RIGHT
CIP – CAST–IN–PLACE
A.P. – ANGLE POINT
W.P. – WORK POINT

PRECAST 3–SIDED STRUCTURE NOTES:

1. UNLESS OTHERWISE NOTED, ALL DIMENSIONS ARE IN FEET AND INCHES.
2. PRECAST 3–SIDED CONCRETE STRUCTURE SHOWN ON THE PLANS IS A SCHEMATIC ONLY. ACTUAL PRECAST SEGMENT LENGTHS, WIDTHS, HEIGHTS AND QUANTITY OF SEGMENTS SHALL BE DETERMINED BY THE CONTRACTOR BASED ON THE MANUFACTURER'S DESIGN AND ALLOWABLE SHIPPING WEIGHT AND LENGTHS. THE CONTRACTOR SHALL SUBMIT A REVISED FOUNDATION DESIGN TO THE ENGINEER WITH THE ACTUAL LOADS OF THE SUPPLIED STRUCTURE. FOUNDATION DESIGN MUST BE INCLUDED IN THE SHOP DRAWINGS AND SUBMITTED FOR APPROVAL AT THE SAME TIME AS THE DESIGN CALCULATIONS FOR THE PRECAST CONC 3–SIDED STRUCTURE.
3. CONCRETE FOR THE PRECAST CONC 3–SIDED STRUCTURE SHALL BE CONCRETE CL. 5000 MINIMUM. CONCRETE FOR THE SPREAD FOOTING FOUNDATION SHALL BE CONCRETE CL. 3000 MINIMUM.
4. END UNITS SHALL BE SKEWED TO MATCH ADJACENT WALLS. ALL INTERIOR UNITS SHALL BE PERPENDICULAR TO THE CENTERLINE OF THE STRUCTURE (SQUARED ENDS).
5. SEE SHEET FP1 FOR FISH PASSAGE STREAMBED DETAILS.
6. EXISTING UNDERGROUND UTILITIES, STORM DRAINS, WATER LINES, AND GAS LINES SHALL BE RELOCATED PRIOR TO ERECTION OF THE OF THE 3–SIDED STRUCTURE. SEE RESPECTIVE DISCIPLINE SHEETS FOR DETAILS.
7. THE CONTRACTOR SHALL SUBMIT AN ERECTION PLAN IN ACCORDANCE WITH THE SPECIAL PROVISIONS TO THE ENGINEER FOR REVIEW PRIOR TO CONSTRUCTION.
8. ALL WORK ASSOCIATED WITH THE CONSTRUCTION OF THE PRECAST 3–SIDED STRUCTURE INCLUDING THE DESIGN, FURNISHING AND INSTALLING OF THE SPREAD FOOTINGS, WING WALLS, HEADWALLS, AND AS SPECIFIED IN THE SPECIAL PROVISIONS, SHALL BE INCLUDED IN THE LUMP SUM PRICE FOR "PRECAST REINF. CONC. THREE–SIDED STRUCTURE – NO. 1".
9. THE QUANTITIES SHOWN ON THE PLANS ARE ONLY FOR THE CONVENIENCE OF THE CONTRACTOR IN DETERMINING THE VOLUME OF WORK INVOLVED FOR THIS STRUCTURE. CONTRACTOR SHALL USE THE QUANTITIES SHOWN AT THEIR OWN RISK.
10. ALL EXPOSED FACES OF THE STRUCTURE SHALL BE PIGMENTED SEALED.
11. EXPOSED WINGWALLS AND HEADWALL SURFACES SHALL HAVE A SIMILAR ARCHITECTURAL PATTERN AND SURFACE TREATMENT AS THE ADJACENT RETAINING WALLS. SEE SHEET WD11 FOR DEVELOPED ELEVATIONS AND DETAILS.

CONSTRUCTIONS NOTES

NO	DESCRIPTION
1	EXISTING GAS – SEE (UT) SHEETS FOR LIMITS OF REMOVAL OR RELOCATION.
2	PROPOSED GAS – SEE (UT) SHEETS FOR DETAILS.
3	EXISTING UNDERGROUND COMM – SEE (UT) SHEETS FOR LIMITS OF REMOVAL OR RELOCATION.
4	PROPOSED UNDERGROUND COMM – SEE (UT) SHEETS FOR DETAILS.
5	EXISTING WATER LINE – SEE (WM) SHEETS FOR LIMITS OF REMOVAL OR RELOCATION.
6	PROPOSED WATER LINE – SEE (WM) SHEETS FOR DETAILS
7	EXISTING OVERHEAD POWER – SEE (UT) SHEETS FOR LIMITS OF REMOVAL OR RELOCATION
8	PROPOSED OVERHEAD POWER – SEE (UT) SHEETS FOR DETAILS
9	EXISTING STORM DRAINAGE – SEE (DR) SHEETS FOR LIMITS OF REMOVAL OR RELOCATION
10	PROPOSED STORM DRAINAGE – SEE (DR) SHEETS FOR DETAILS
11	APPROXIMATE CUT SLOPE REQUIRED FOR BLOCK WALL CONSTRUCTION 3:1 MAX SLOPE ASSUMED.
12	PROPOSE UTILITY VAULTS. COORDINATE DESIGN OF SEW REINF AROUND VAULTS AND UTILITY LINES. SEE UTILITY SHEETS FOR VAULT DETAILS.
13	WATER LINE CONNECTIONS THRU WALL, COORDINATE DESIGN OF SEW REINF AROUND UTILITY LINE. SEE DETAIL 3 ON SHEET WD2.

ROBERT D. RICHARDSON
STATE OF WASHINGTON
33999
REGISTERED
PROFESSIONAL ENGINEER

NO.	DATE	BY	APPR.	REVISIONS

Approved By

TRANSPORTATION DESIGN MANAGER — DATE
PROJECT MANAGER — DATE

R. RICHARDSON — DESIGNED BY — DATE
C. WILCOX — DRAWN BY — DATE
P. FERRIER — CHECKED BY — DATE

City of Bellevue
TRANSPORTATION DEPARTMENT

HDR

124TH AVE NE - NE ICHIGO WAY TO NORTHUP WAY

PRECAST CONC 3-SIDED STRUCTURE - NO 1
GENERAL NOTES

SHEET NAME CV1 — SHT X OF X

Plotted: May 07, 2015 – 1:55pm lkeller C:\pwworking\sea\d0903319\192465_CV1–CV5.dwg Layout Name: CV1
PWpath: /13.00_CAD/13.01_Plans/15–Retaining Wall Plans/

SECTION 28, T.25N., R.5E., W.M.
KING COUNTY

90% SUBMITTAL NOT FOR CONSTRUCTION

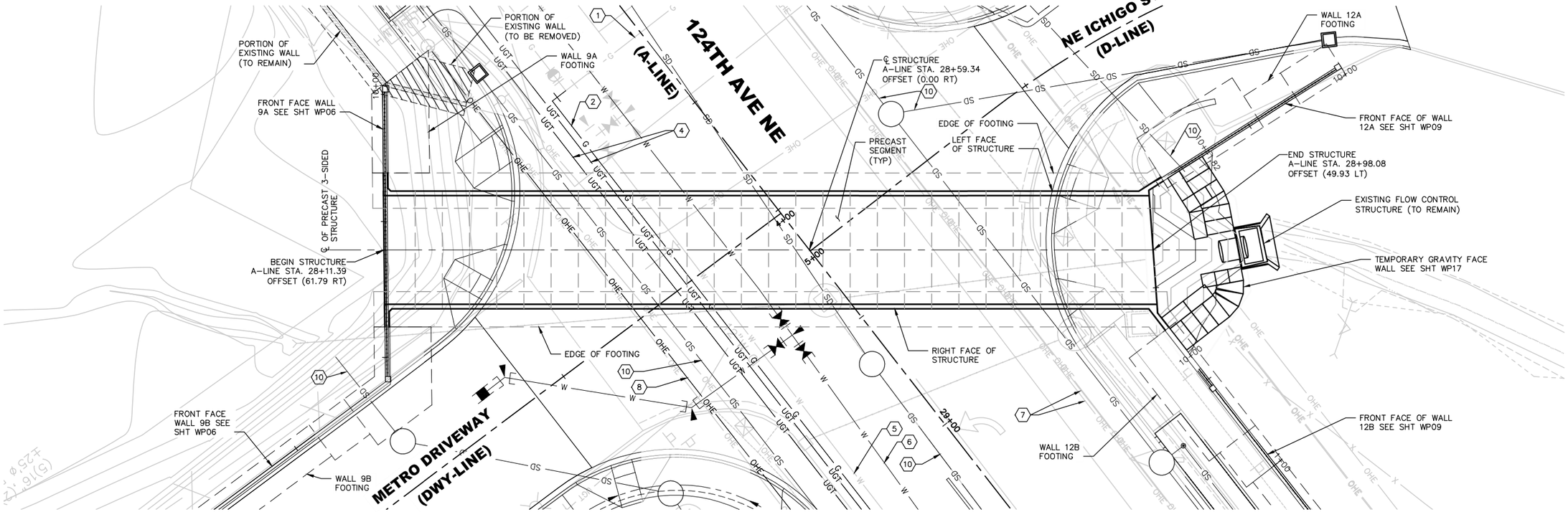

PRECAST CONC 3-SIDED STRUCTURE – PLAN

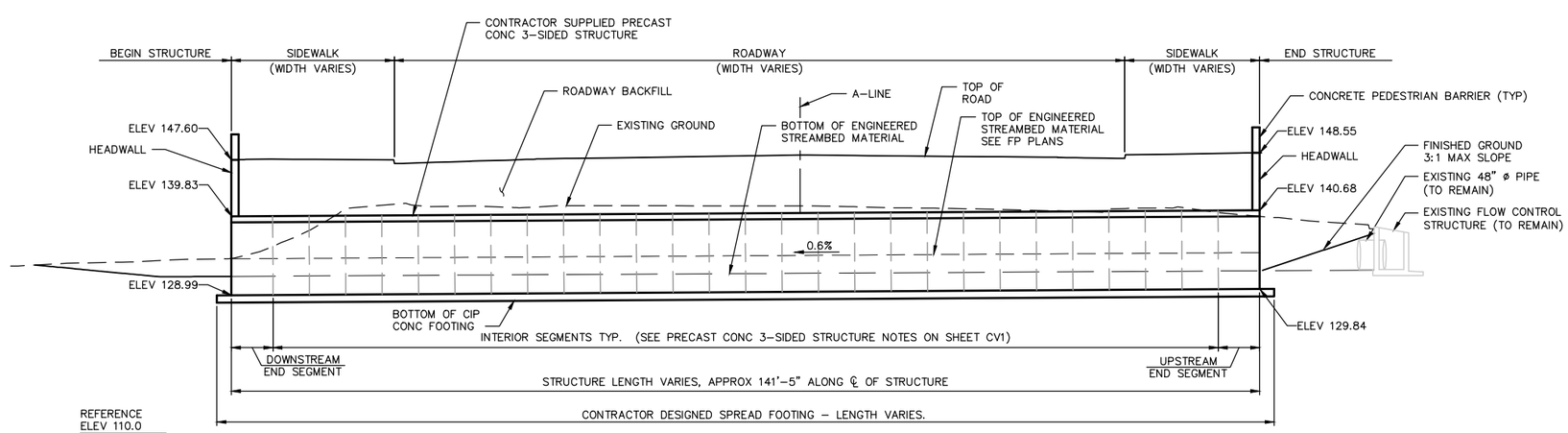

PRECAST CONC 3-SIDED STRUCTURE – TYPICAL SECTION

(SECTION TAKEN ALONG ℄ OF STRUCTURE)

VERTICAL CONTROL

VERTICAL DATUM: NAVD88

CITY OF BELLEVUE BENCH MARK NO. 151 WEST SIDE OF 120TH AVE NE 150' NORTH OF VECA ELECTRIC 2023 120TH AVE NE STAMPED 151 TOP MIDDLE BOLT OF THREE ON EAST SIDE OF BASE FOR RR CROSSING SIGNAL POLE.

APPROXIMATE QUANTITIES PRECAST CONC 3-SIDED STRUCTURE	
LENGTH OF STRUCTURE (FT)	142
STRUCTURAL EXCAVATION CL A. INCL HAUL (CY)	1945
GRAVEL BACKFILL FOR WALLS (CY)	533

QUANTITIES SHOWN ARE APPROX. AND IS FOR THE CONVENIENCE OF CONTRACTOR IN DETERMINING THE VOLUME OF WORK INVOLVED FOR THIS STRUCTURE. CONTRACTOR SHALL USE THESE QUANTITIES AT THEIR OWN RISK.

SCALE 10 5 0 10 20

NO.	DATE	BY	APPR.	REVISIONS

Approved By

TRANSPORTATION DESIGN MANAGER — DATE

PROJECT MANAGER — DATE

R. RICHARDSON — DESIGNED BY — DATE

C. WILCOX — DRAWN BY — DATE

P. FERRIER — CHECKED BY — DATE

City of Bellevue
TRANSPORTATION DEPARTMENT

HDR

124TH AVE NE - NE ICHIGO WAY TO NORTHUP WAY

PRECAST CONC 3-SIDED STRUCTURE - NO 1 PLAN AND SECTION

SHEET NAME CV2 — SHT X OF X

Plotted: May 07, 2015 – 1:56pm lkeller C:\pwworking\sea\d0903319\192465_CV1-CV5.dwg Layout Name: CV2
PWpath: /13.00_CAD/13.01_Plans/15-Retaining Wall Plans/

90% SUBMITTAL NOT FOR CONSTRUCTION

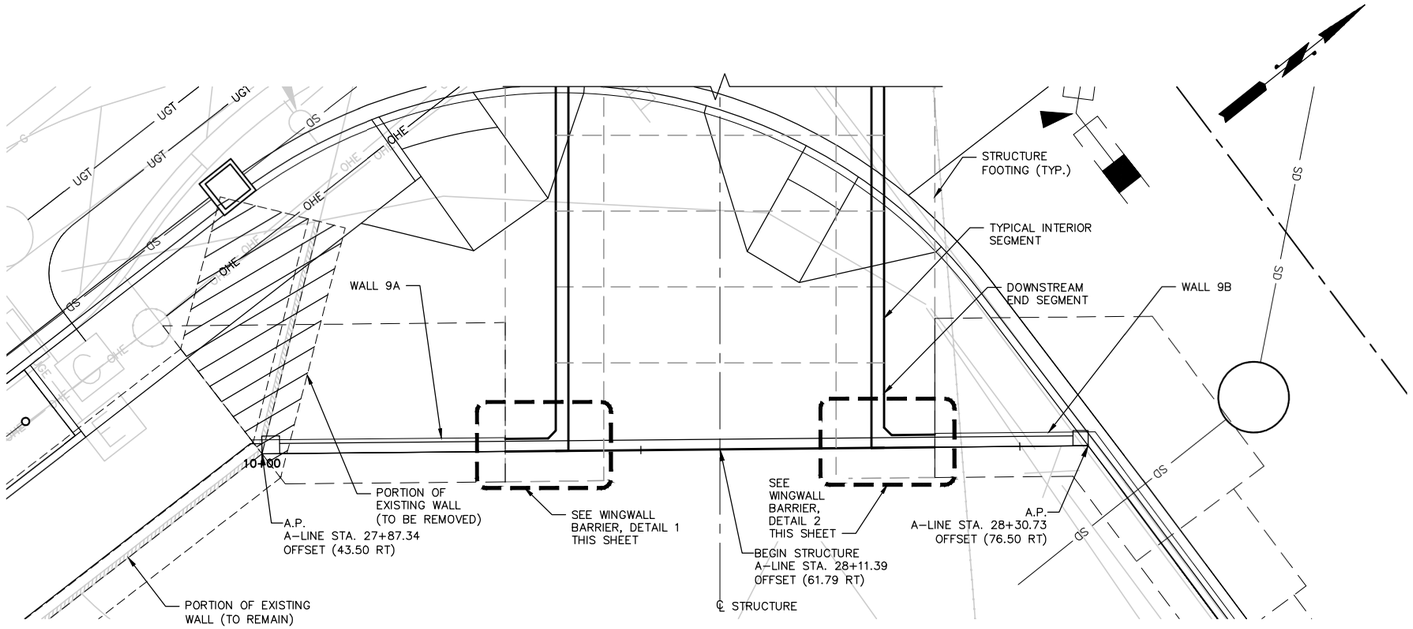

DOWNSTREAM END SEGMENT – PLAN

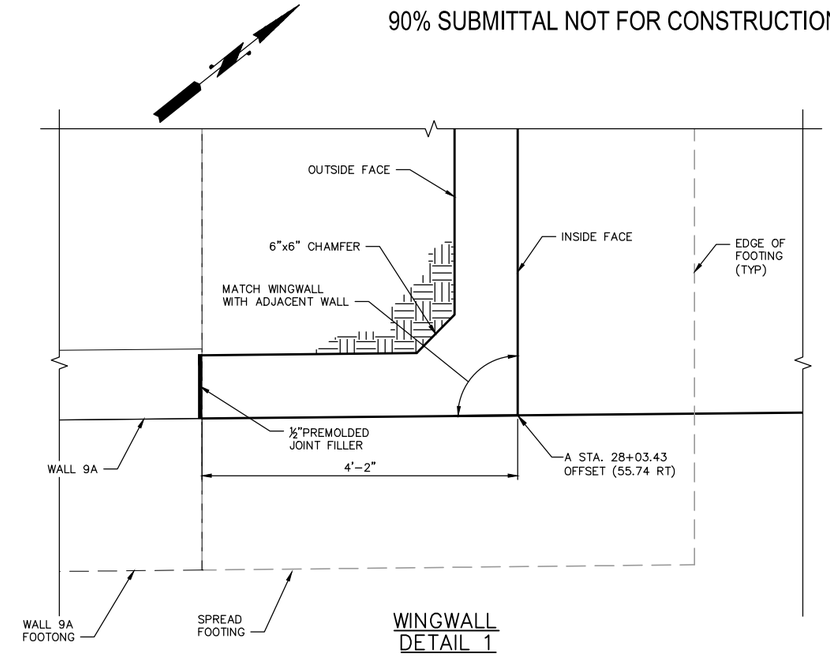

WINGWALL DETAIL 1

NTS

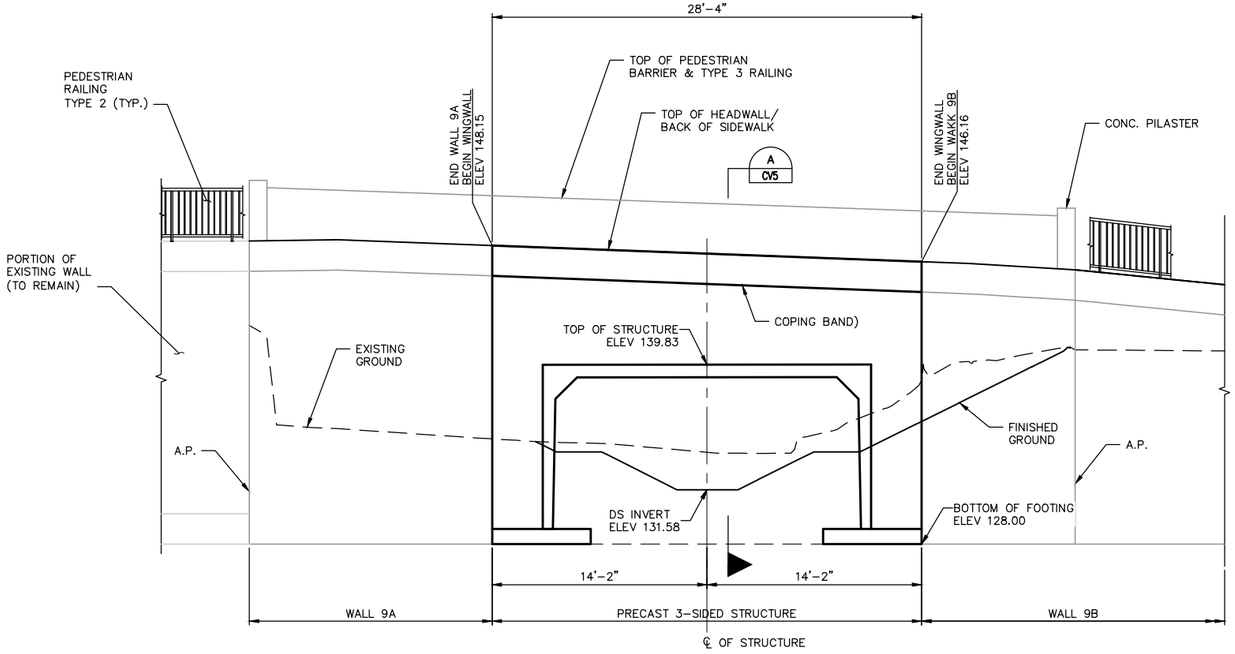

DOWNSTREAM END SEGMENT – VIEW

(LOOKING UPSTREAM)

NOTE:
WINGWALL AND HEADWALL DIMENSIONS AND REINF. SHALL BE DESIGNED BY CONTRACTOR

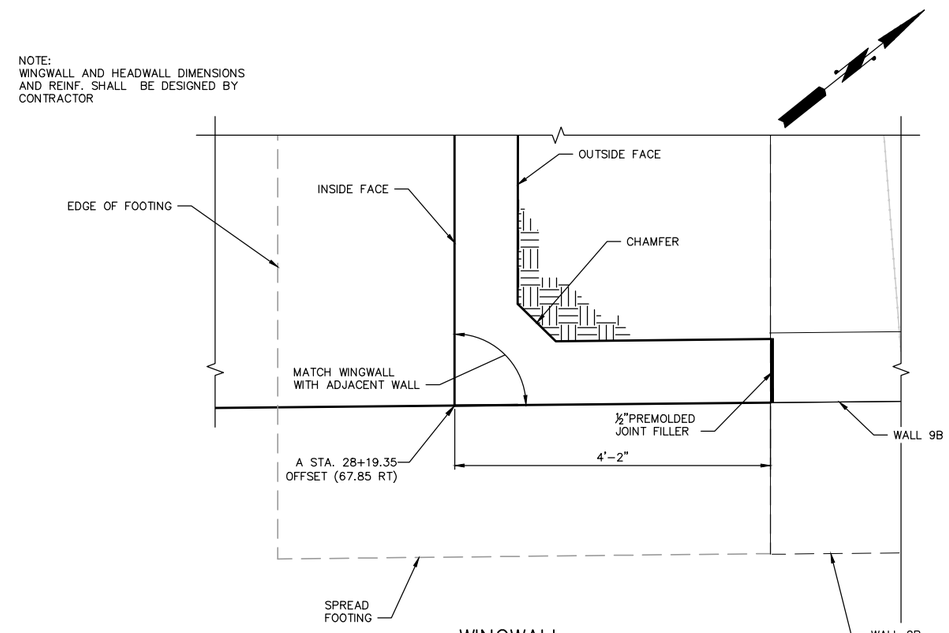

WINGWALL DETAIL 2

NTS

NO.	DATE	BY	APPR.	REVISIONS

Approved By

TRANSPORTATION DESIGN MANAGER — DATE

PROJECT MANAGER — DATE

R. RICHARDSON — DESIGNED BY — DATE
C. WILCOX — DRAWN BY — DATE
P. FERRIER — CHECKED BY — DATE

City of Bellevue
TRANSPORTATION DEPARTMENT

HDR

124TH AVE NE - NE ICHIGO WAY TO NORTHUP WAY

PRECAST 3-SIDED STRUCTURE DOWNSTREAM END SEGMENT DETAILS

SHEET NAME CV3 — SHT X OF X

Plotted: May 07, 2015 – 1:57pm lkeller C:\pwworking\sea\d0903319\192465_CV1-CV5.dwg Layout Name: CV3
PWpath: /13.00_CAD/13.01_Plans/15-Retaining Wall Plans/

GENERAL NOTES:
1. UNLESS OTHERWISE NOTED, ALL DIMENSIONS ARE IN FEET AND INCHES.

90% SUBMITTAL NOT FOR CONSTRUCTION

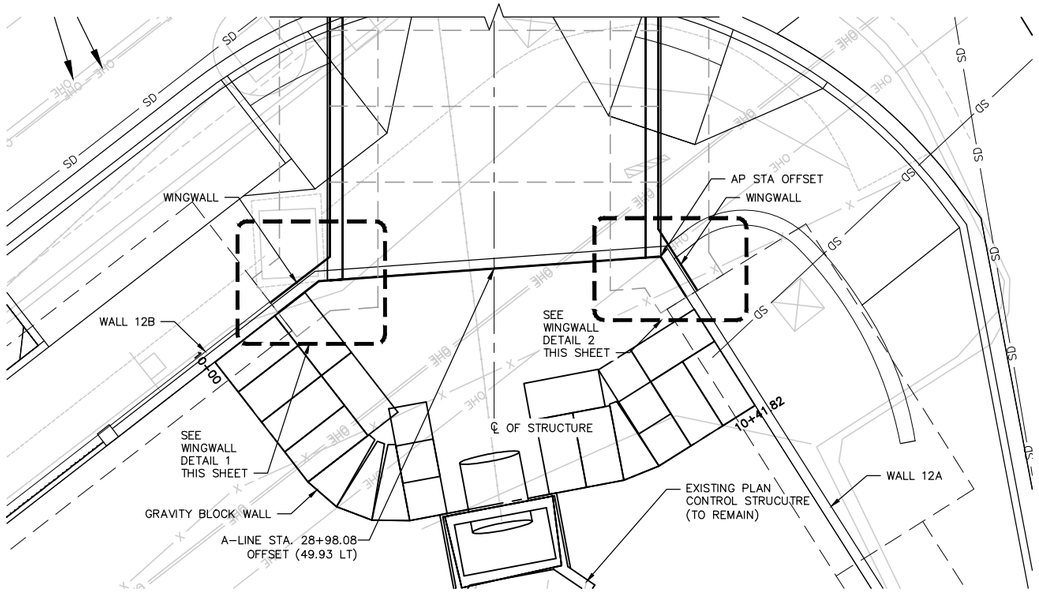

UPSTREAM END SEGMENT – PLAN

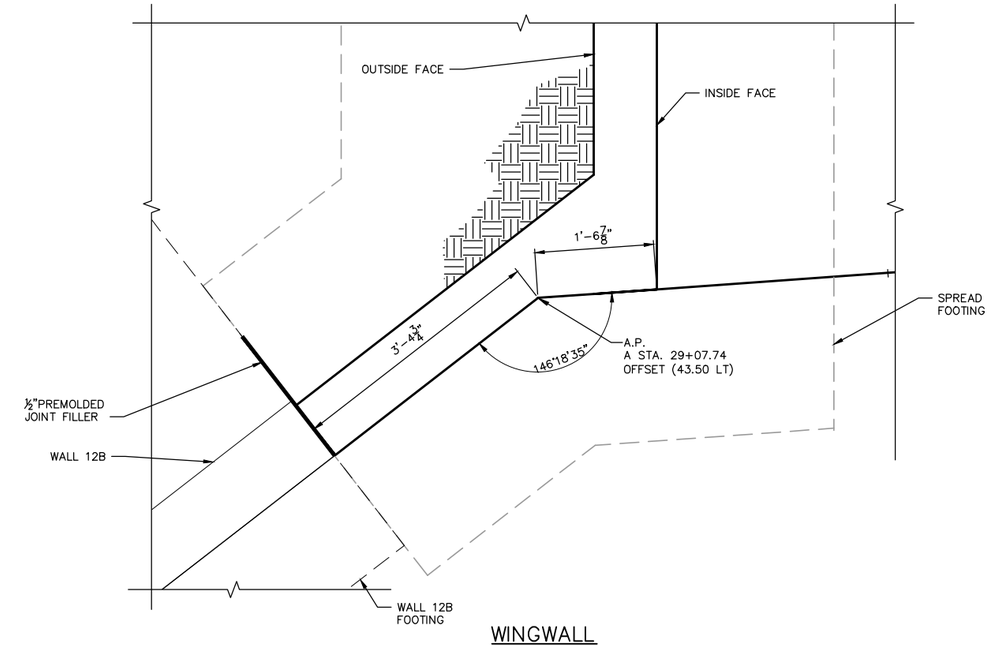

WINGWALL DETAIL 1
NTS

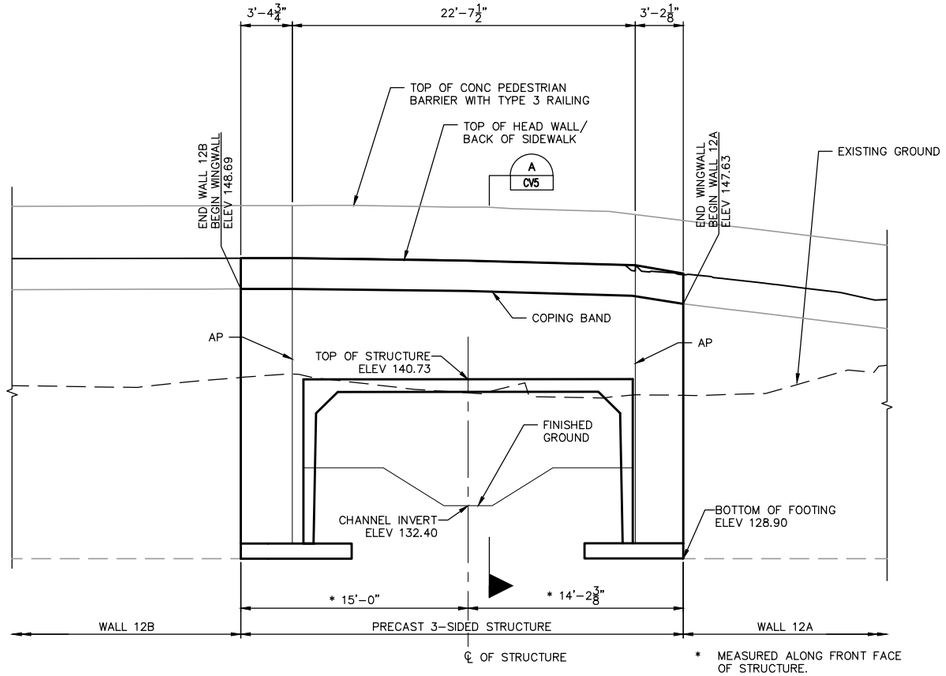

* MEASURED ALONG FRONT FACE OF STRUCTURE.

UPSTREAM END SEGMENT – VIEW
(LOOKING DOWNSTREAM)

NOTE:
WINGWALL AND HEADWALL DIMENSIONS AND REINF. SHALL BE DESIGNED BY THE CONTRACTOR.

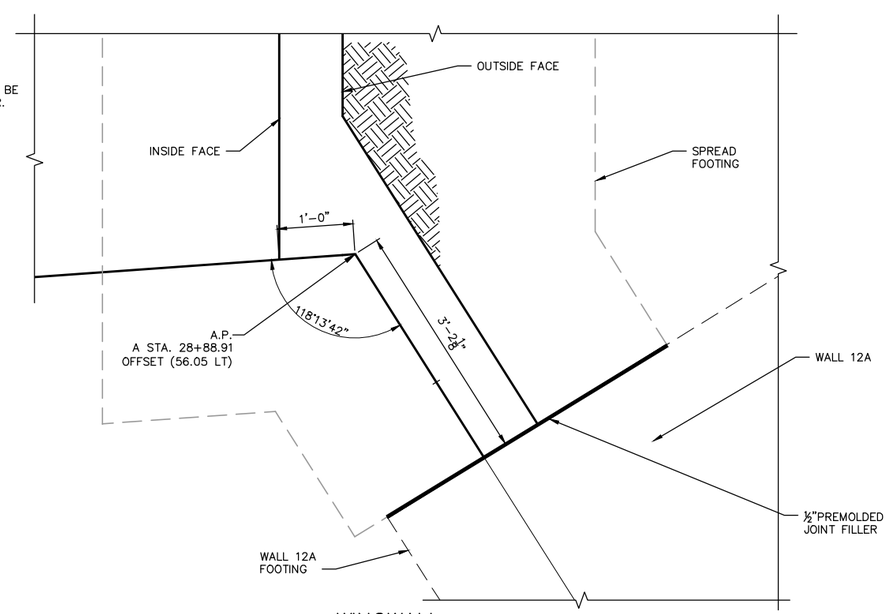

WINGWALL DETAIL 2
NTS

NO.	DATE	BY	APPR.	REVISIONS

Approved By

TRANSPORTATION DESIGN MANAGER — DATE
PROJECT MANAGER — DATE

R. RICHARDSON — DESIGNED BY — DATE
C. WILCOX — DRAWN BY — DATE
P. FERRIER — CHECKED BY — DATE

City of Bellevue
TRANSPORTATION DEPARTMENT

HDR

124TH AVE NE - NE ICHIGO WAY TO NORTHUP WAY

PRECAST 3-SIDED STRUCTURE UPSTREAM END SEGMENT DETAILS

SHEET NAME CV4 — SHT X OF X

Plotted: May 07, 2015 – 1:58pm lkeller C:\pwworking\sea\d0903319\192465_CV1-CV5.dwg Layout Name: CV4
PWpath: /13.00_CAD/13.01_Plans/15-Retaining Wall Plans/

GENERAL NOTES:
1. UNLESS OTHERWISE NOTED, ALL DIMENSIONS ARE IN FEET AND INCHES.

90% SUBMITTAL NOT FOR CONSTRUCTION

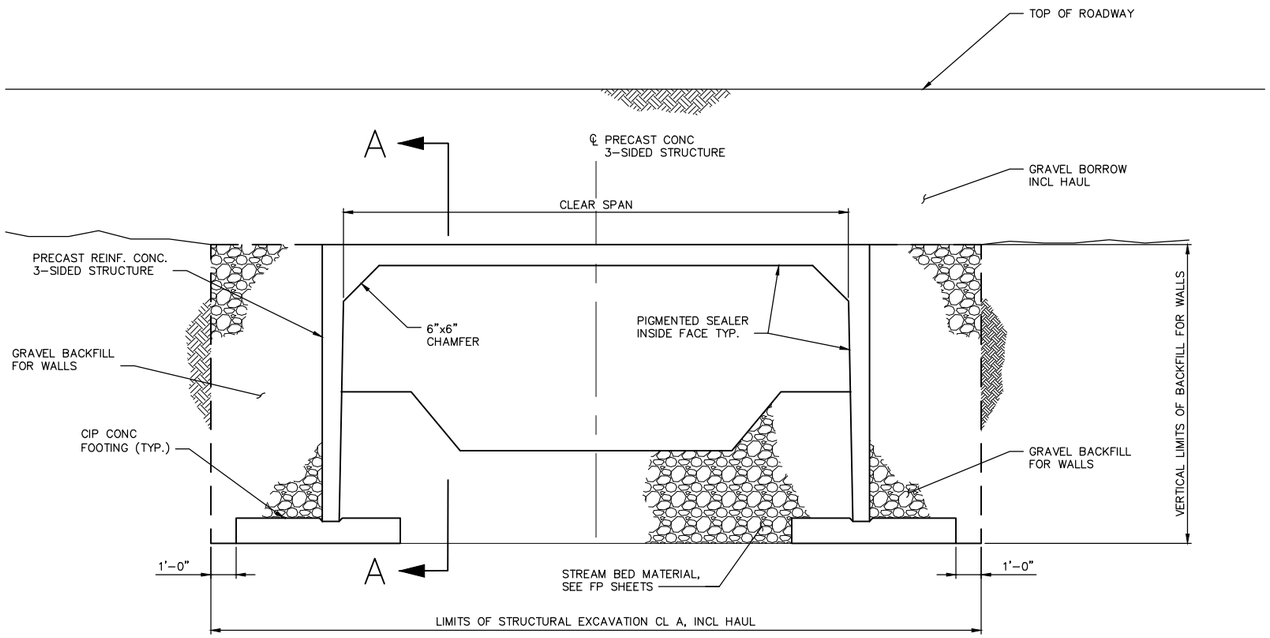

TYPICAL SECTION
N.T.S.

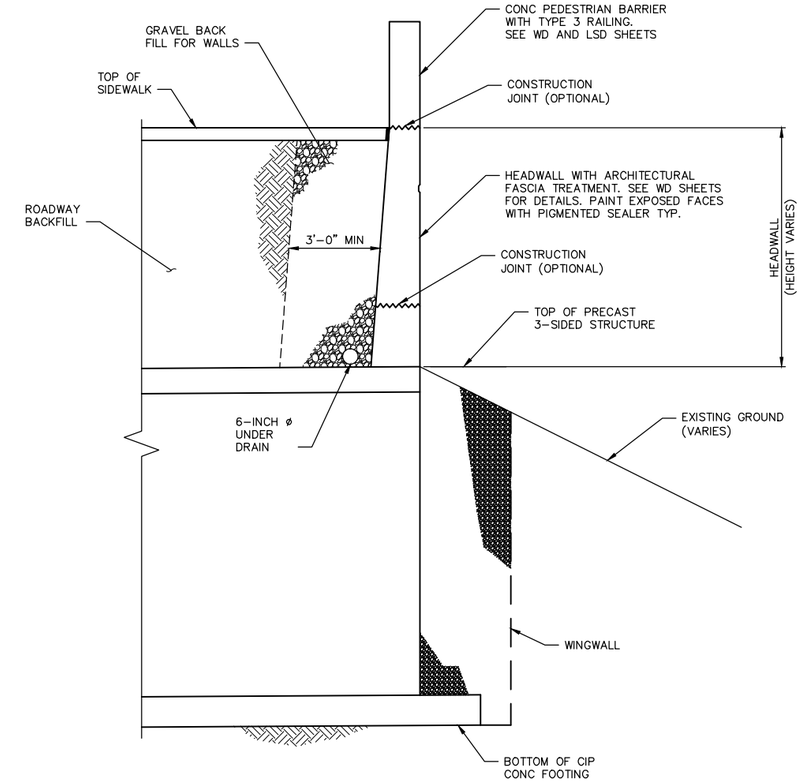

SECTION VIEW
END SEGMENT & HEADWALL
N.T.S.

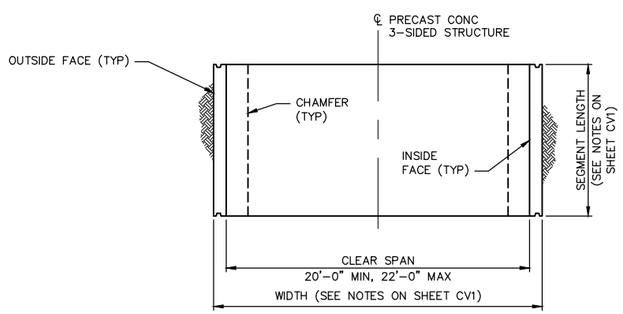

TOP VIEW
TYPICAL INTERIOR SEGMENT
N.T.S.

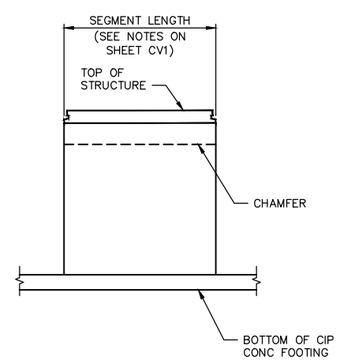

SECTION
TYPICAL INTERIOR SEGMENT
N.T.S.

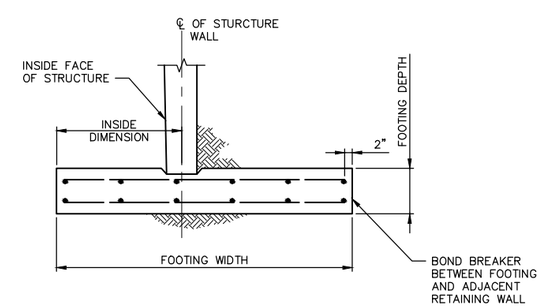

FOOTING NOTES:
FOOTING GEOMETRY AND REINF SHALL BE DESIGNED BY THE CONTRACTOR IN CONJUNCTION WITHE THE PRECAST FABRICATOR. COORDINATE LAYOUT OF FOOTING WITH ADJACENT RETAINING WALLS.

SPREAD FOOTING TYP SECTION
N.T.S.

ROBERT D. RICHARDSON
STATE OF WASHINGTON
33996
REGISTERED PROFESSIONAL ENGINEER

NO.	DATE	BY	APPR.	REVISIONS

Approved By

TRANSPORTATION DESIGN MANAGER — DATE
PROJECT MANAGER — DATE

R. RICHARDSON — DESIGNED BY — DATE
C. WILCOX — DRAWN BY — DATE
P. FERRIER — CHECKED BY — DATE

City of Bellevue
TRANSPORTATION DEPARTMENT

HDR

124TH AVE NE - NE ICHIGO WAY TO NORTHUP WAY

PRECAST 3-SIDED STRUCTURE TYPICAL DETAILS

SHEET NAME CV5 — SHT X OF X

Plotted: May 07, 2015 – 1:59pm lkeller C:\pwworking\sea\d0903319\192465_CV1-CV5.dwg Layout Name: CV5
PWpath: /13.00_CAD/13.01_Plans/15-Retaining Wall Plans/

SECTION 28, T. 25 N., R5E., W.M.
KING COUNTY

90% SUBMITTAL NOT FOR CONSTRUCTION

GENERAL NOTES:

1. UNLESS OTHERWISE NOTED, ALL DIMENSIONS ARE IN FEET AND INCHES.
2. EXISTING FLOW CONTROL STRUCTURE TO REMAIN. VERIFY ALL DIMENSIONS, ELEVATIONS AND LOCATION.
3. EXISTING 48" CMP CULVERT SHALL FIRST BE INSPECTED TO DETERMINE STRUCTURAL INTEGRITY PRIOR TO REUSE.
4. OUTLET OF FLOW CONTROL STRUCTURE SHALL BE ALIGNED TO CENTER OF PROPOSED STREAM CHANNEL WITHIN CULVERT.
5. SCOUR SHALL BE PREVENTED BETWEEN THE FLOW CONTROL STRUCTURE AND PROPOSED FISH PASSAGE CULVERT.

NOTE TO DESIGNER:

1. SEE SHEET WD1 FOR DESIGN INFORMATION FOR FISH PASSAGE CULVERT, TEMPORARY WALL AND EXISTING FLOW CONTROL STRUCTURE. ADDITIONAL INFORMATION NEEDED TO FINALIZE DESIGN.

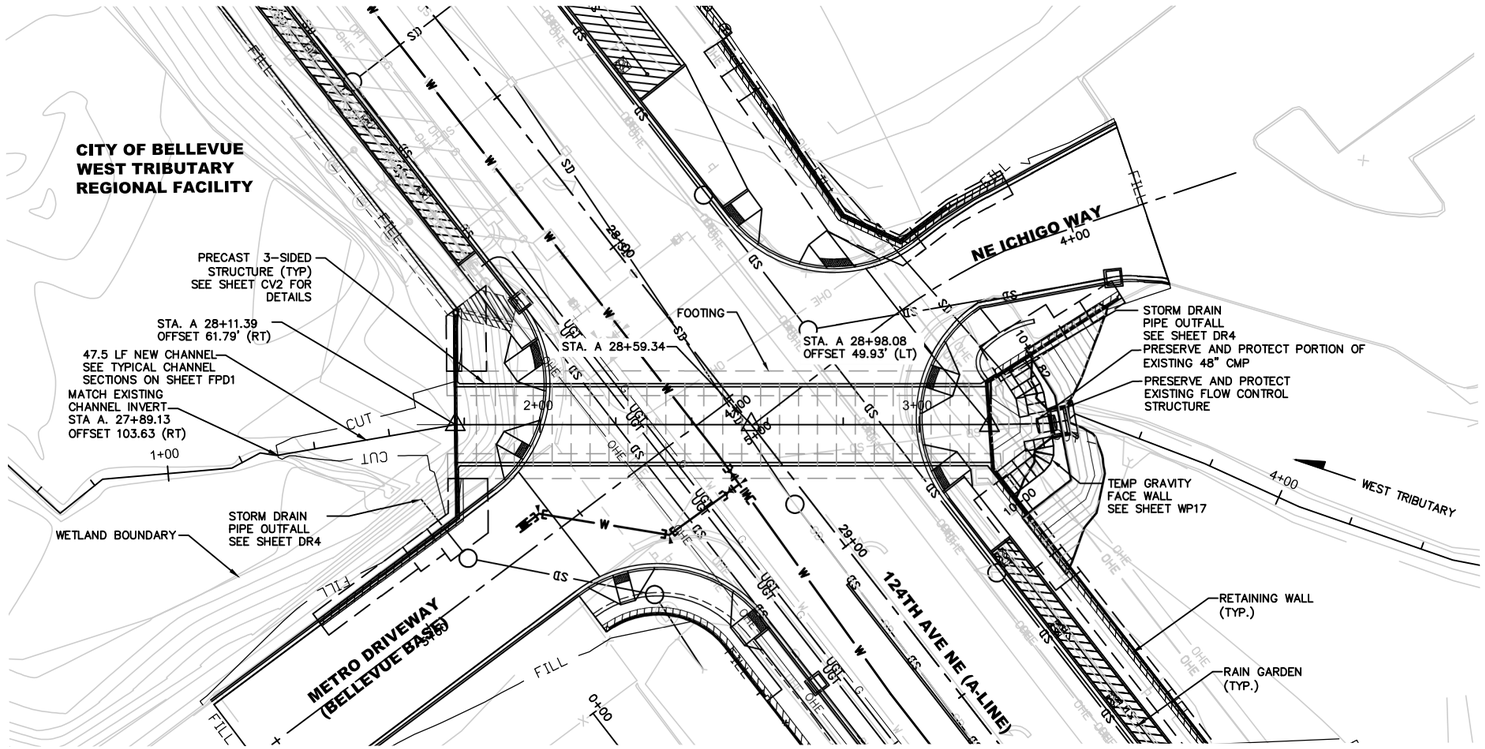

PLAN

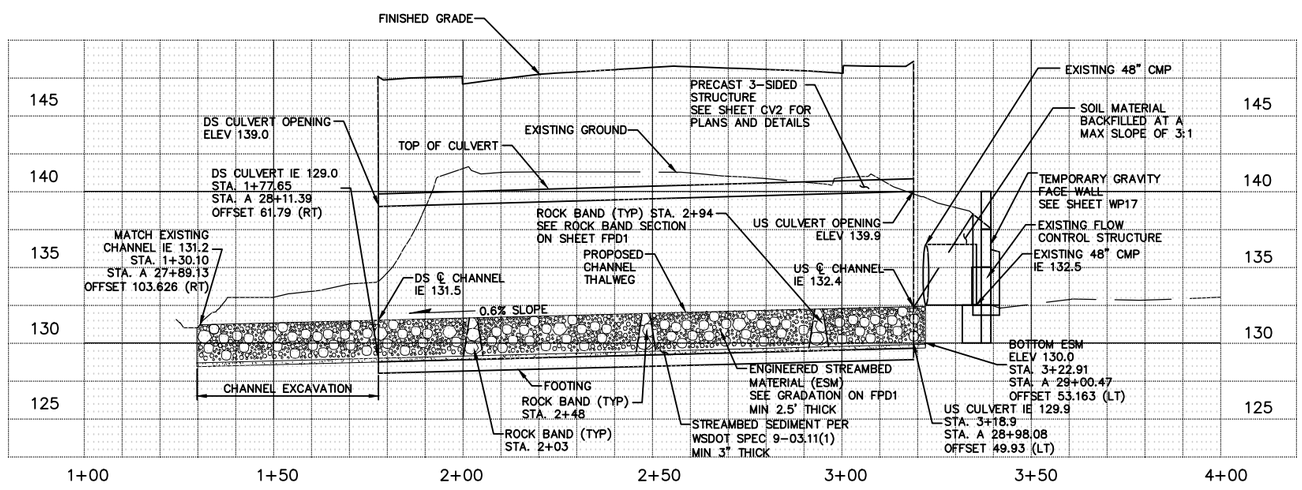

WEST TRIBUTARY PROFILE

20 10 0 20 40
HORIZONTAL SCALE

5 2.5 0 5 10
VERTICAL SCALE

BRIAN C. PETERSON
STATE OF WASHINGTON
40676
REGISTERED
PROFESSIONAL ENGINEER

NO.	DATE	BY	APPR.	REVISIONS

Approved By

TRANSPORTATION DESIGN MANAGER — DATE
PROJECT MANAGER — DATE

D. MINNER — DESIGNED BY — DATE
C. WILCOX — DRAWN BY — DATE
P. FERRIER — CHECKED BY — DATE

City of Bellevue
TRANSPORTATION DEPARTMENT

HDR

124TH AVE NE - NE ICHIGO WAY TO NORTHUP WAY

FISH PASSAGE PLAN AND PROFILE

SHEET NAME FP1 — SHT X OF X

Plotted: May 07, 2015 – 12:01pm dminner C:\pwworking\sea\d0871156\192465_FP1.dwg Layout Name: FP1
PWpath: /13.00_CAD/13.01_Plans/18-Fish Passage Channel Plan, Profile, & Details/

90% SUBMITTAL NOT FOR CONSTRUCTION

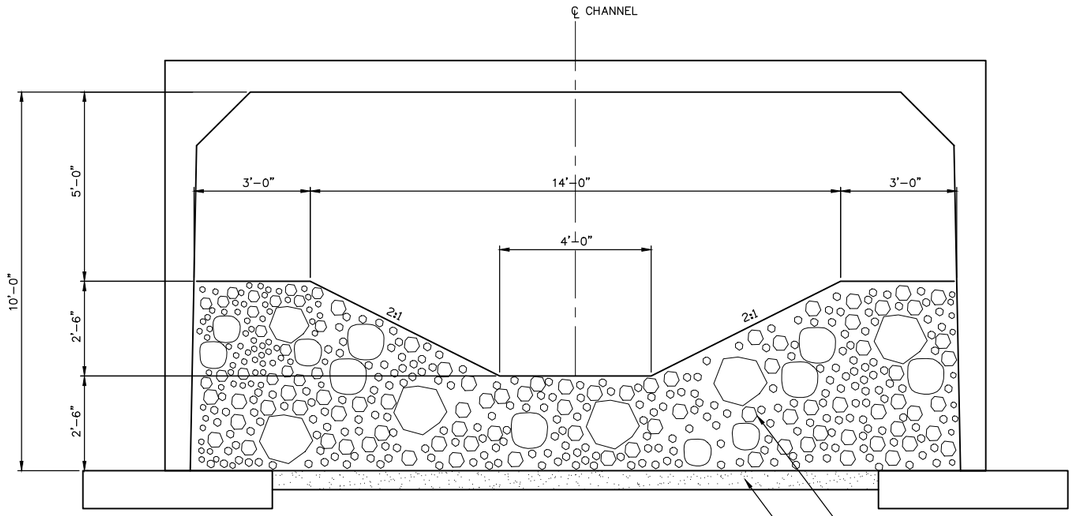

TYPICAL CULVERT SECTION
N.T.S.

NOTES:
1. SEE CV SHEETS FOR CULVERT DETAILS.

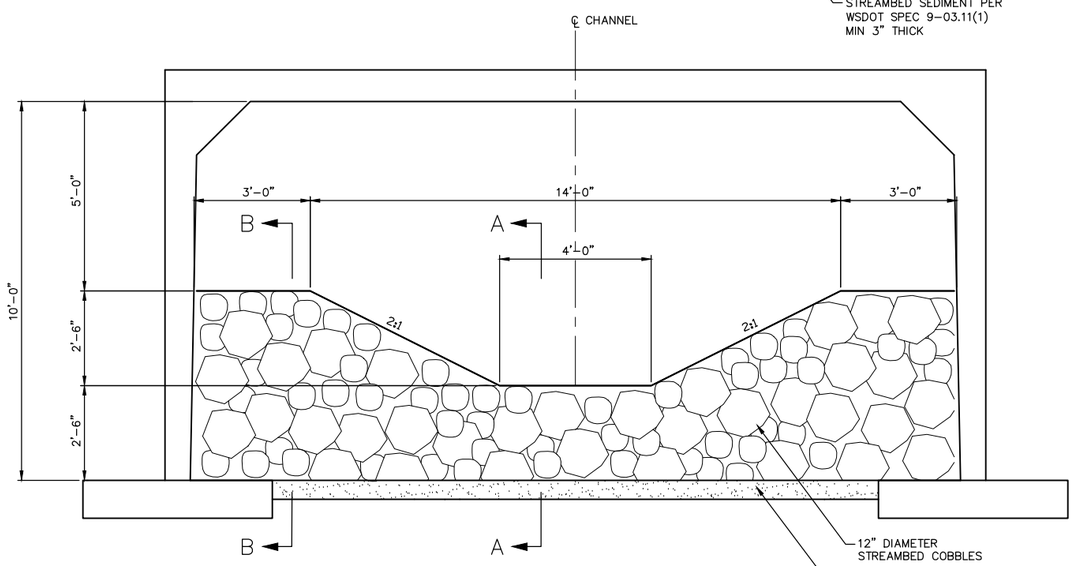

TYPICAL ROCK BAND SECTION
N.T.S.

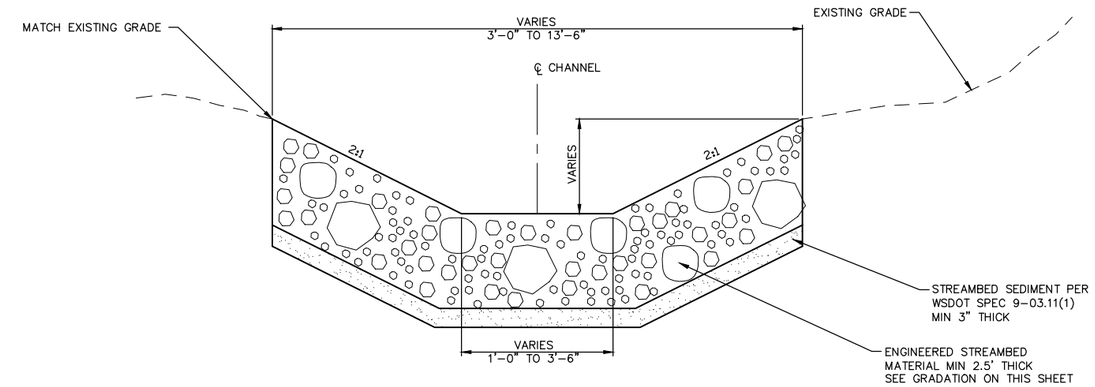

TYPICAL CHANNEL SECTION
N.T.S. FROM WEST TRIBUTARY
STA. 1+30.10 TO STA. 1+68.00

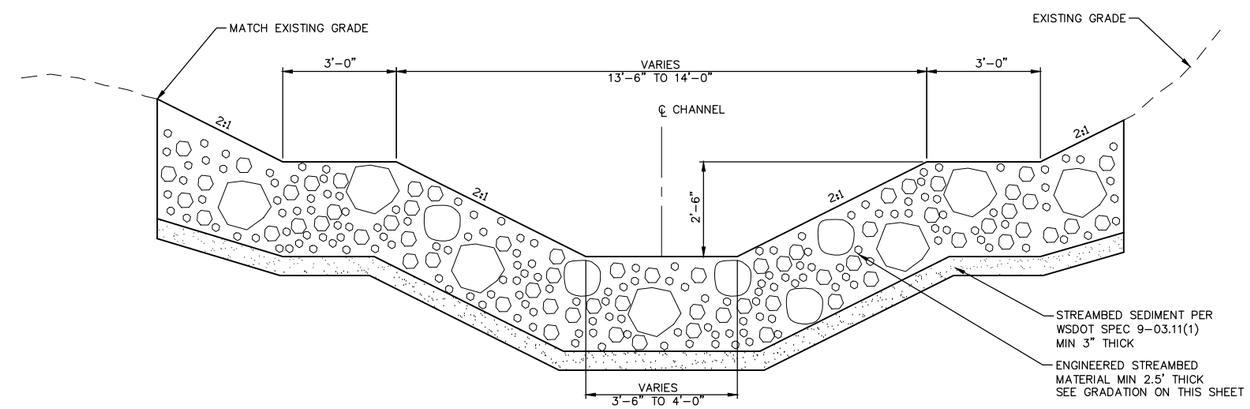

TYPICAL CHANNEL SECTION
N.T.S. FROM WEST TRIBUTARY
STA. 1+68.00 TO STA. 1+77.65

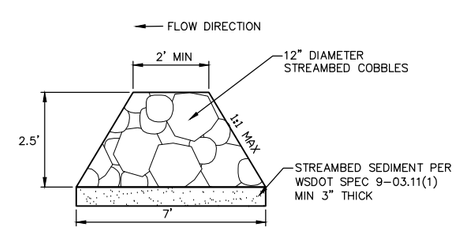

SECTION A–A
N.T.S.

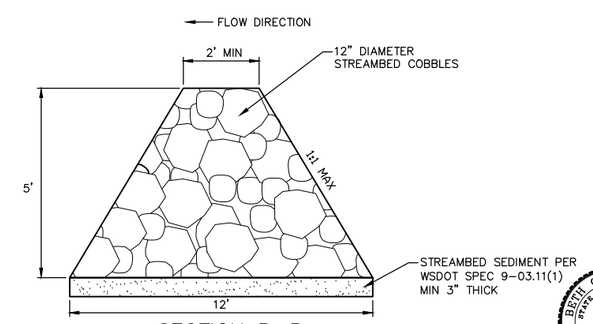

SECTION B–B
N.T.S.

ENGINEERED STREAMBED MATERIAL GRADATION:

ENGINEERED STREAMBED MATERIAL (ESM) SHALL CONSIST OF A WELL-GRADED UNIFORM MIXTURE OF DIVERSIFIED PARTICLE SIZES. ESM SHALL BE FILLED IN LIFTS WITH THE FOLLOWING MATERIAL AND RATIOS BY VOLUME:

A). 2 PART BY VOLUME OF STREAMBED SEDIMENT PER WSDOT SPEC 9-03.11(1)
B). 1 PART BY VOLUME OF 12" STREAMBED COBBLES PER WSDOT SPEC 9-03.11(2)
C). 3 PARTS BY VOLUME OF 4" STREAMBED COBBLES PER WSDOT SPEC 9-03.11(2)

BRIAN C. PETERSON
STATE OF WASHINGTON
40676
REGISTERED
PROFESSIONAL ENGINEER

NO.	DATE	BY	APPR.	REVISIONS

Approved By

TRANSPORTATION DESIGN MANAGER — DATE
PROJECT MANAGER — DATE

D. MINNER — DESIGNED BY — DATE
C. WILCOX — DRAWN BY — DATE
P. FERRIER — CHECKED BY — DATE

City of Bellevue
TRANSPORTATION DEPARTMENT

HDR

124TH AVE NE - NE ICHIGO WAY TO NORTHUP WAY

FISH PASSAGE DETAILS

SHEET NAME FPD1 — SHT X OF X

Plotted: May 07, 2015 – 11:57am dminner C:\pwworking\sea\d0871156\192465_FPD1.dwg Layout Name: FPD1
PWpath: /13.00_CAD/13.01_Plans/18-Fish Passage Channel Plan, Profile, & Details/

Attachment 3

Chapter 9: Mitigation

This chapter describes the proposed mitigation for impacts to critical areas affected by the project. It outlines impact avoidance and minimization (including BMPs), and describes mitigation goals, objectives, and performance standards, as well as proposed monitoring and maintenance efforts at the mitigation site.

9.1 Mitigation Sequencing

The City of Bellevue requires that mitigation for impacts to wetland buffer follow this approved order (LUC 20.25H.210):

1. Avoiding the impact altogether by not taking a certain action or parts of an action
2. Minimizing the impacts by limiting the degree or magnitude of the action and its implementation with appropriate technology or by taking affirmative steps, such as project redesign, relocation or timing, to avoid or reduce the impacts
3. Rectifying the impact by repairing, rehabilitating or restoring the affected environment
4. Reducing or eliminating the impact over time by preservation and maintenance operations during the life of the action
5. Compensating for the impact by replacing, enhancing, or providing substitute resources or environments
6. Monitoring the hazard or other required mitigation and taking remedial action when necessary.

Avoidance and Minimization

The project has been designed to avoid or minimize impacts to critical areas and buffers wherever feasible. Project impacts to critical areas will be avoided or minimized using the following design and construction methods:

- Considerable efforts have been made for this project to limit disturbance to all the wetlands, and no wetland fill is proposed for this corridor project.
- To the extent practicable, work will be performed during the dry season in the stream to limit potential sedimentation effects and interruptions in surface and subsurface flows.
- Exposed soils will be stabilized with a vegetative cover or other erosion control treatment immediately following construction. Landscaping in compliance with City of Bellevue standards would be installed to control erosion.
- During construction, erosion control BMPs would be employed. The BMPs include use of mulch, silt barriers, containment systems, and cover measures (straw or plastic), as well as reseeding of areas temporarily disturbed by construction.
- Oil, fuels, or chemicals will not be discharged to surface waters or onto land where there is a potential for reentry into surface waters.
- Removal of riparian vegetation will be minimized as much as possible.

- Temporarily graded and cleared areas will be restored to appropriate grades and revegetated with appropriate native vegetation.
- BMPs will be used to minimize effects during and after construction.
- The project will comply with water quality conditions identified by Ecology.

9.2 Buffer Mitigation

Buffer mitigation will be provided for permanent and temporary wetland buffer impacts for this project. Enhancement will be at 1:1 ratio for impacts to the buffer of Category II, III, and IV wetlands (LUC 20.25H.105).

For 0.28 acres of unavoidable impacts to the wetland buffers within the project corridor, approximately 0.28 acres of degraded wetland buffer of Wetland 1 would be enhanced (Figure 6). The proposed buffer mitigation area is located on the east of 124th Avenue and the north end of Wetland 1. The establishment of native woody vegetation in the degraded wetland buffer would increase buffer functions by slowing down water flow, limiting erosion, and providing vegetative screening and wildlife cover for Wetland 1. Table 8 presents proposed plant species to be infilled into the existing wetland buffer areas of Wetland 1. This planting palette will also be used in temporarily disturbed wetland buffer areas.

Table 8. Proposed Planting Palette for the Proposed Buffer Mitigation Area

Common Name	Latin Name	Percentage of Community Composition	Typical Plant Spacing(On Center)	Size
Oregon Ash	*Fraxinus latifolia*	5%	8’ OC	2 gallon/4’
Sitka Spruce	*Picea sitchensis*	5%	8’ OC	2 gallon/4’
Western Red Cedar	*Thuja plicata*	5%	4’ OC	2 gallon/8’
Pacific Willow	*Salix lucida*	10%	4’ OC	Live Stake
Sitka Willow	*Salix sitchensis*	10%	4’ OC	Live Stake
Vine Maple	*Acer circinatum*	5%	4’ OC	2 gallon
Beaked Hazelnut	*Corylus cornuta*	10%	4’ OC	2 gallon
Red-flowering Currant	*Ribes sanguineum*	10%	4’ OC	1 gallon
Pacific Ninebark	*Physocarpus capitatus*	10%	4’ OC	1 gallon
Baldhip Rose	*Symphoricarpos albus*	10%	4’ OC	1 gallon
Salmonberry	*Rubus spectabilis*	10%	4’ OC	1 gallon
Tall Oregon Grape	*Mahonia aquifolium*	10%	4’ OC	1 gallon
Soft Rush	*Juncus effusus*	--	Seed	Hydroseed

This page intentionally left blank

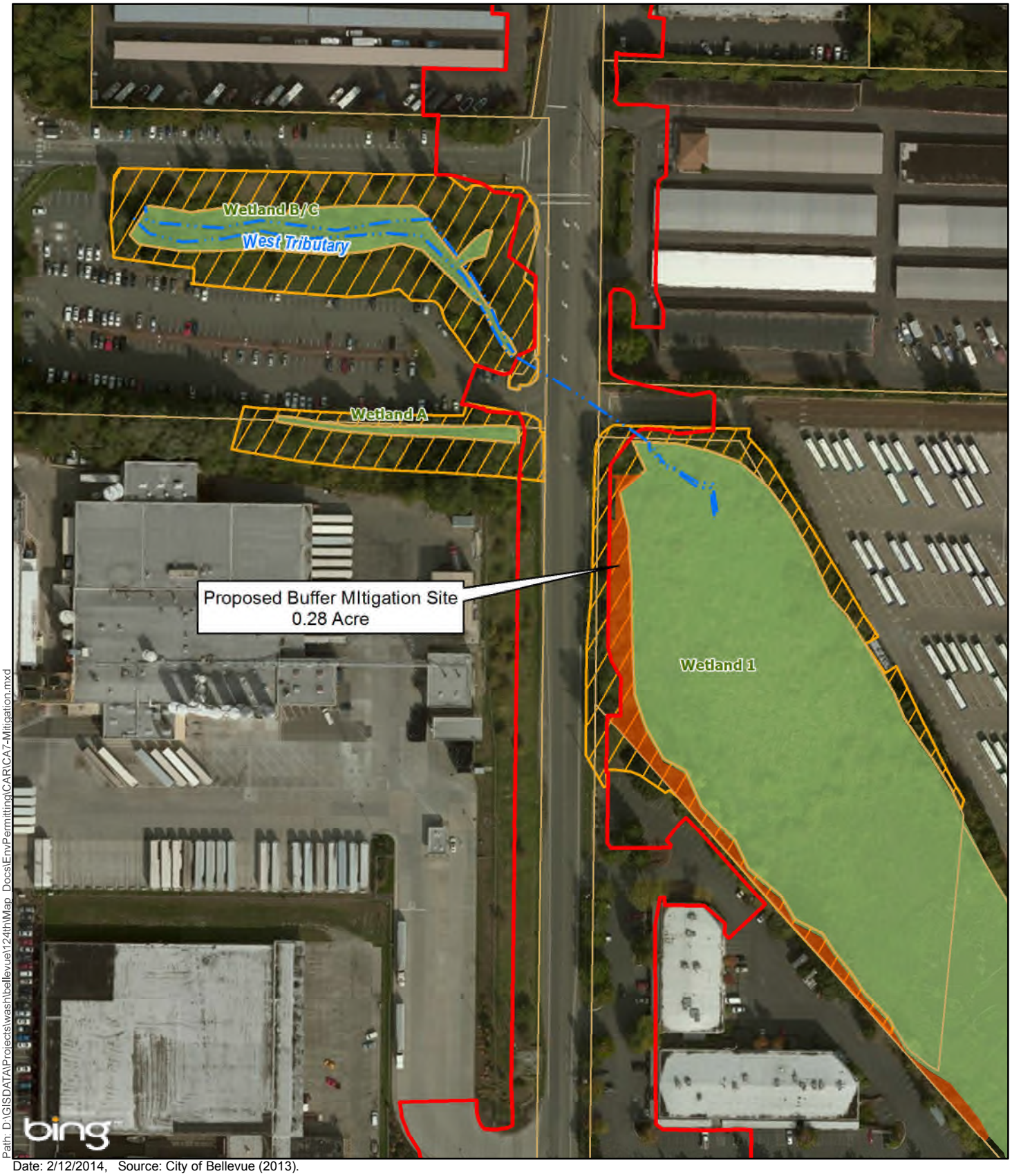

Path: D:\GISDATA\Projects\wash\bellevue\124th\Map_Docs\EnvPermitting\CAR\CA7-Mitigation.mxd

Date: 2/12/2014, Source: City of Bellevue (2013).

Legend

- Proposed Buffer Mitigation Site
- Wetland
- Wetland Buffer
- Parcel
- Construction Limit
- Delienated Stream

0 100 200 Feet

Figure 6
Proposed Buffer Mitigation Area at the Project Site

124th Avenue NE | Bellevue, Washington

This page intentionally left blank

Mitigation Goals

The goal of the proposed buffer mitigation is to replace the functions that are provided by the wetland buffer through enhancement. Enhancement activities will consist of improving water quality, hydrologic, and habitat functions that were observed at the site by removing non-native species such as Himalayan blackberry and English ivy and planting with native woody species.

Mitigation Objectives

The objective of the proposed mitigation is to establish a diverse plant community in the proposed buffer mitigation area and improve system complexity by increasing the structural diversity of the native plant community, which should improve wildlife habitat.

Performance Standards

Performance standards are measurable, quantifiable indicators of mitigation performance relative to the mitigation objectives and goals. The following minimum performance standards are proposed for the buffer enhancement areas and apply to all the objectives listed above:

1. The project biologists shall supervise the installation of plantings and verify that plants have been installed in quantities and species specified in plans.
2. Monitor plants to ensure appropriate survival rates:

   Areas shall meet the performance standards for plants as noted below:

   - Year 1: 100% survival of planted stock
   - Desirable native volunteers may be included in plant counts.
3. Buffer plantings shall demonstrate sufficient cover to provide wildlife habitat function:

   Areas shall meet the performance standards for shrub cover as noted below:

   - Year 1: 25 % cover
   - Year 2: 60% cover
   - Year 3: 70% cover
   - Year 5: 75% cover
   - Desirable native volunteers may be included in plant counts.

9.3 Monitoring Plan

The buffer mitigation area would be monitored to demonstrate compliance with applicable permit conditions and to evaluate the establishment and maintenance of the plant community within the planted area. The monitoring phase of the project is expected to consist of iterative and corrective measures, such as removing invasive species and is expected to occur up until a point when planted native species appear to be established. This goal would be initiated by careful plant selection, established by monitoring for plant health and survival, and then ensured by documenting progress.

Monitoring would continue at the buffer mitigation area up to five years after construction or until the City of Bellevue concurs that the plants have established at the site. The mitigation goal would be considered achieved when the project team and the City of Bellevue agree that plants have become established and can be expected to survive and self-maintain the area. If the area becomes covered with native plants and there are no foreseeable issues from invasive plants and human disturbance, monitoring would become unnecessary.

The monitoring period would commence from the month that the installation is completed. Overview photos would be taken from the same vantage points each year to document overall appearance of the buffer mitigation area before, during, and after construction. Plant survivorship would be defined as fully healthy and thriving. Plants would be considered "dead" when more than 50% of the plant is decadent. Monitoring field visits would take place during the growing season of each monitoring year, and a monitoring report would be submitted to the City of Bellevue by the end of each calendar year.

9.4 Contingency Plan

The purpose of the contingency plan is to identify the need for maintenance or corrective action if the monitoring indicates that any of the performance standards are not met. These actions will be documented in the monitoring reports. Contingency measures are provided in Table 9.

Table 9. Contingency Measures

Problem	Contingency Measures
Site does not meet plant survivorship requirements	• Evaluate reasons for mortality (e.g., poor soil conditions, insufficient moisture, incorrect planting, browsing by wildlife, vandalism). • Address cause for mortality and replant to exceed survivorship requirements (contractor is responsible for replacing plant materials that die in the first year). • Provide protective measures (e.g., rodent fencing, deer repellent, weeding, etc.), if appropriate. • Initiate or modify irrigation practices, if necessary.
Over-competition by invasive species (more than 30% cover in the mitigation area)	• Evaluate predominant invasive species in the restoration areas. • Initiate invasive species control protocols appropriate to species type, conditions of infestation area (wetland or buffer), and level of infestation (e.g., herbicide application, mowing, etc.).

9.5 Additional Mitigation requirements for Streams

The LUC 20.25H. 085 notes:

In addition to the provisions of LUC 20.25H.210, mitigation plans designed to mitigate impacts to streams and stream critical area buffers shall meet the requirements of this section.

A. Mitigation Preference.

Mitigation plans for streams and stream critical area buffers shall provide mitigation for impacts to critical area functions and values in the following order of preference:

1. On-site, through replacement of lost critical area buffer;

2. On-site, through enhancement of the functions and values of remaining critical area buffer;

3. Off-site, through replacement or enhancement, in the same sub-drainage basin;

4. Off-site, through replacement or enhancement, out of the sub-drainage basin but in the same drainage basin.

Mitigation off-site and out of the drainage basin shall be permitted only through a critical areas report.

B. Buffer Mitigation Ratio.

Critical area buffer disturbed or impacted under this part shall be replaced at a ratio of one-to-one. (Ord. 5680, 6-26-06, § 3)

Applicant's Response:

No permanent impacts to the West Tributary would occur as a result of this project. Construction of the culvert replacement would not directly or indirectly affect the West Tributary or its buffer because the proposed project will result in replacement of the existing culvert with a shorter box culvert. Overall, there will be a net benefit to the aquatic habitat for the West Tributary.

20.25H.090 Critical areas report – Additional provisions.

A. Limitation on Modifications.

A stream critical area buffer shall not be modified below the widths set forth in this section, measured from the top-of-bank:

Type S waters	*25 feet*
Type F waters	*25 feet*
Type N waters	*10 feet*
Type O waters	*10 feet*

Applicant's Response:

The West Tributary is a Type F stream, and the proposed project will not modify the critical area buffer below 25 feet from the top-of-bank.

B. Additional Content - Closed Stream Segments

Any critical areas report proposing a modification to the structure setbacks required for closed stream segments shall be based on a consideration of the impact of the modification on the feasibility of reopening the closed stream segment in the future, when compared with the feasibility of reopening the closed stream segment without the proposed modification. Where the proposed modification significantly decreases the feasibility of a future reopening, such modification shall be denied, unless the proposal includes mitigation for the functions and values that could have been achieved by reopening the stream segment. (Ord. 5680, 6-26-06, § 3)

Applicant's Response:

The project is not proposing a modification to the structure setbacks required for closed stream segments. The structure setback for the West Tributary in the project area is 10 feet, based on application of LUC 20.25H.075(D) for Closed Stream Segments.

9.6 Additional Mitigation requirements for Wetlands

The LUC 20.25H.105 notes:

In addition to the provisions of LUC 20.25H.210, mitigation plans designed to mitigate impacts to wetlands and wetland critical area buffers shall meet the requirements of this section.

A. Preference of Mitigation Actions.

2. Mitigation for Impacted Wetland Critical Area Buffer. Mitigation actions that require compensation of impacted critical area buffer shall occur in the following order of preference and in the following locations:

a. On-site, through replacement of lost critical area buffer;

b. On-site, through enhancement of the functions and values of remaining critical area buffer;

c. Off-site, through replacement or enhancement, in the same sub-drainage basin;

d. Off-site, through replacement or enhancement, out of the sub-drainage basin but in the same drainage basin.

Applicant's Response:

Mitigation for impacts to wetland critical area buffers from the proposed project will be located on-site, through enhancement of Wetland 1 buffer.

B. Type and Location of Mitigation for Wetland Critical Area.

Compensatory mitigation for critical areas functions and values shall be either in-kind and on-site, or in-kind and within the same drainage sub-basin. Mitigation actions may be conducted off-site and outside of the drainage sub-basin when all of the following are demonstrated through a critical areas report:

1. *There are no reasonable on-site or in-sub-drainage basin opportunities or on-site and in-sub-drainage basin opportunities do not have a high likelihood of success, after a determination of the natural capacity of the site to mitigate for the impacts. Consideration should include: anticipated wetland mitigation replacement ratios, buffer conditions and proposed widths, hydrogeomorphic classes of on-site wetlands when restored, proposed flood storage capacity, and potential to mitigate stream fish and wildlife impacts (such as connectivity);*

2. *Off-site mitigation has a greater likelihood of providing equal or improved wetland functions than the impacted wetland; and*

3. *Off-site locations shall be in the same sub-drainage basin unless established watershed goals for water quality, flood or conveyance, habitat, or other wetland functions have been established and strongly justify location of mitigation at another site.*

Applicant's Response:

Several options for wetland buffer mitigation were evaluated for the project. With this project, on-site wetland buffer mitigation is considered feasible on the north end of Wetland 1 and to provide similar types of buffer functions as those areas that would be affected. As a result, the mitigation proposed for impacts to wetland critical area buffers will be located on-site in Wetland 1.

C. Mitigation Ratios.

3. Critical Area Buffer Mitigation Ratio. Critical area buffer disturbed or impacted under this part shall be replaced at a ratio of one-to-one.

Applicant's Response:

Buffer mitigation for this project will be provided for 0.3 acre of unavoidable permanent wetland buffer impacts. Enhancement is required at a 1:1 ratio for impacts to the buffer of Category II, III, and IV wetlands (LUC 20.25H.105). Approximately 0.28 acres of degraded Wetland 1 buffer would be enhanced.

D. Wetlands Enhancement as Mitigation.

Impacts to wetland critical area functions may be mitigated by enhancement of existing significantly degraded wetlands. Applicants proposing to enhance wetlands must produce a critical areas report meeting the requirements of LUC 20.25H.110 and 20.25H.230 that identifies how enhancement will increase the functions of the degraded wetland and how this increase will adequately mitigate for the loss of wetland area and function at the impact site. An enhancement proposal must also show whether existing wetland functions will be reduced by the enhancement actions. (Ord. 5680, 6-26-06, § 3)

Applicant's Response:

The project is not proposing to mitigate by enhancing degraded wetlands for wetland buffer impacts.

20.25H.110 Critical areas report – Additional provisions.

A. Limitation on Modification.

A critical areas report may not be used to fill a wetland critical area, except where filling is required to allow a use set forth in LUC 20.25H.055.

Applicant's Response:

The project does not propose filling of wetlands beyond what is an allowed use under 20.25H.055.

B. Additional Content.

In addition to the general requirements of LUC 20.25H.230, a critical areas report for wetlands shall include a written assessment and accompanying maps of the wetlands and buffers within 300 feet of the project area, including the following information at a minimum:

1. A discussion of measures, including avoidance, minimization, and mitigation, proposed to preserve existing wetlands and restore any wetlands that were degraded prior to the current proposed land use activity.

2. A habitat and native vegetation conservation strategy that addresses methods to protect and enhance on-site habitat and wetland functions.

3. Functional evaluation for the wetland and adjacent buffer using a local or state agency staff-recognized method and including the reference of the method and all data sheets. (Ord. 5680, 6-26-06, § 3)

Applicant's Response:

The Critical Areas Report provides a discussion of all wetlands in the immediate vicinity of the site in the narrative discussion in Section 6.1. Information regarding avoidance and

minimization are provided in Section 9.1. Additional information on wetland preservation and enhancement on-site are provided in Section 9.2. This section also provides a discussion of native vegetation enhancement and preservation on the site.

9.7 Functional Lift Analysis

As described in the previous chapters, the proposed project is expected to improve the overall functions the critical areas provide on-site by replanting the existing wetland buffer areas. Additionally, replacing the existing culvert with a box culvert would provide improved fish passage and create a wildlife corridor. Table 10 provides an analysis of the specific functions of the critical areas provided by the existing site and the post-project site.

Through the proposed wetland buffer mitigation activities, functional attributes that will be improved in the wetland buffers include reduced prevalence of invasive species, increased plant diversity by replanting with native species, increased food sources for wildlife, increased vertical and horizontal habitat complexity, and improved stream bank protection.

Table 10. Functional Lift Resulting from the Proposed Project/Wetland Buffer Mitigation

Critical Area/Buffer Functions	Existing Conditions	Proposed Conditions	Change In Function
Wetland			
Water Quality	Existing wetlands (Wetlands 1 and B/C) along the West Tributary provide moderate levels of water quality functions.	Treat all stormwater on-site along 124th Avenue NE.	On-site stormwater treatment will increase pathogen removal of stormwater from 124th Avenue NE that will eventually discharge into Wetland 1. Planting in the buffer area of Wetland 1 with native vegetation will also help filter and trap sediments.
Hydrologic	Wetlands 1 and B/C have potential to reduce peak flows and retain water.	Planting 0.28 acres of native woody vegetation in Wetland 1 buffer.	Replanting 0.28 acres of the wetland buffer has the potential to reduce velocity of peak stream flows.
Habitat	Existing vegetation in the wetland buffer areas lacks native vegetation necessary to provide forage and cover opportunities for wildlife. Although disturbed, these wetland buffer areas still provide some habitat for birds and small mammals. In urban setting, these vegetated buffer areas, especially with trees and tall shrubs, also provide screening for wildlife.	Invasive species such as Himalayan blackberry and English ivy will be removed within the wetland buffer. Approximately 0.28 acres of the wetland buffer area will be replanted, and lawn and invasive species will be replaced with native plant species.	Replanting 0.28 acres of the wetland buffer with native plant species will increase plant diversity and complexity of the buffer areas. New native plantings will provide foraging opportunities for birds and small mammals. Planting native shrubs along the roadway would still provide screening for wildlife.
Stream			
In-Stream Habitat	The West Tributary currently crosses 124th Avenue NE in a 48-inch CMP culvert	The project is proposing to replace the existing culvert with a 10-foot-wide and 20-foot-long box culvert.	Approximately 33 feet of the channel would open up by the project, as well as restoring natural channel conditions by placing well-graded stream bed cobbles in the channel.
Riparian Condition	Riparian habitat is limited along the stream on the west side of 124th Avenue NE. The existing buffer area is dominated by mowed grass and Himalayan blackberry	Himalayan blackberry will be removed, and mowed grass will be replaced with native shrub communities.	Riparian habitat will be restored with an increase in native woody species, which would provide improvement of filtering stormwater, habitat structural complexity, and organic material to the food chain.

CRITICAL AREAS PERMIT EXHIBIT

COMBINED MITIGATION AND IMPACTS FOR 124TH AVENUE NE PROJECT AND THE WEST TRIBUTARY PROJECT
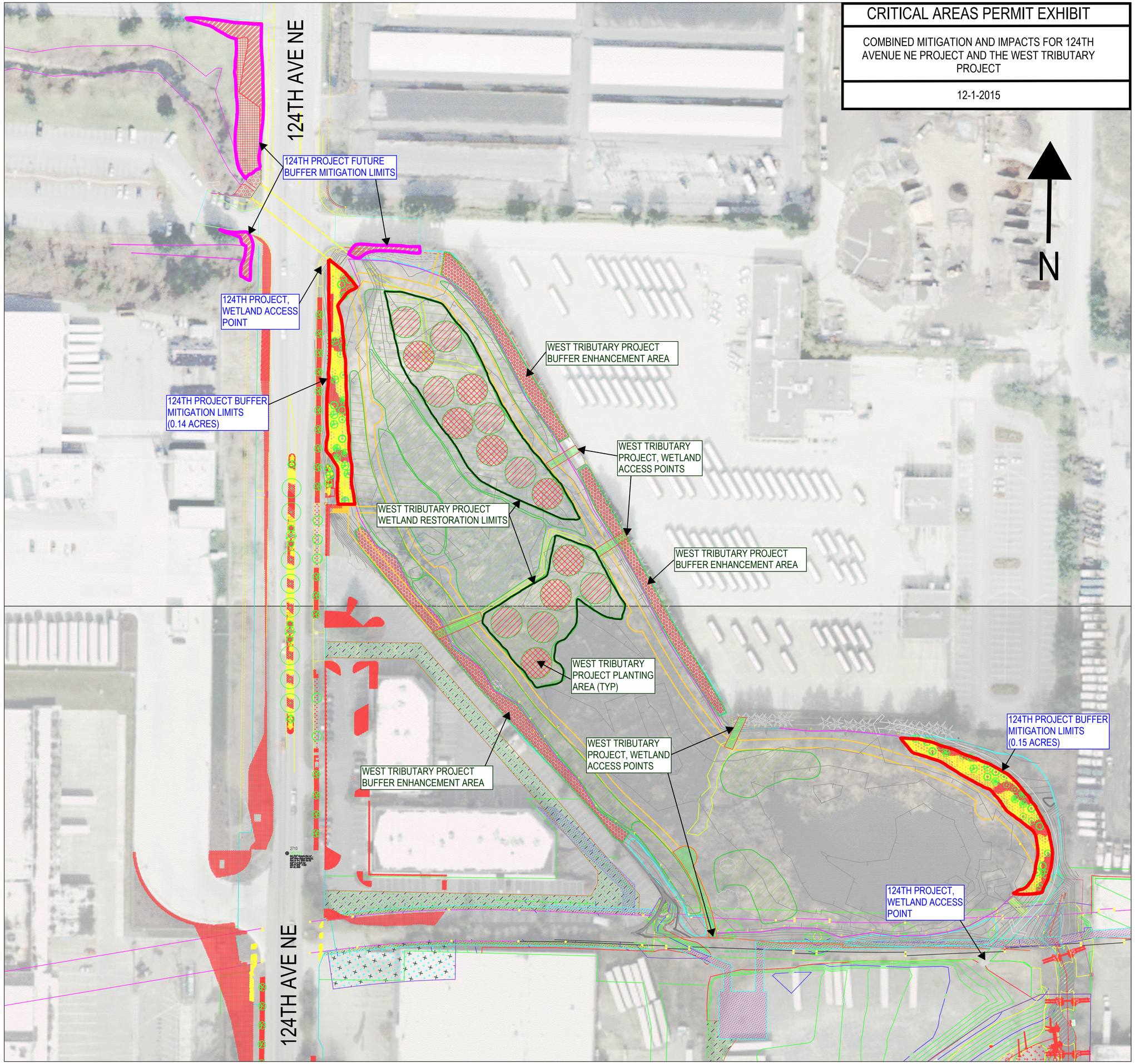
12-1-2015