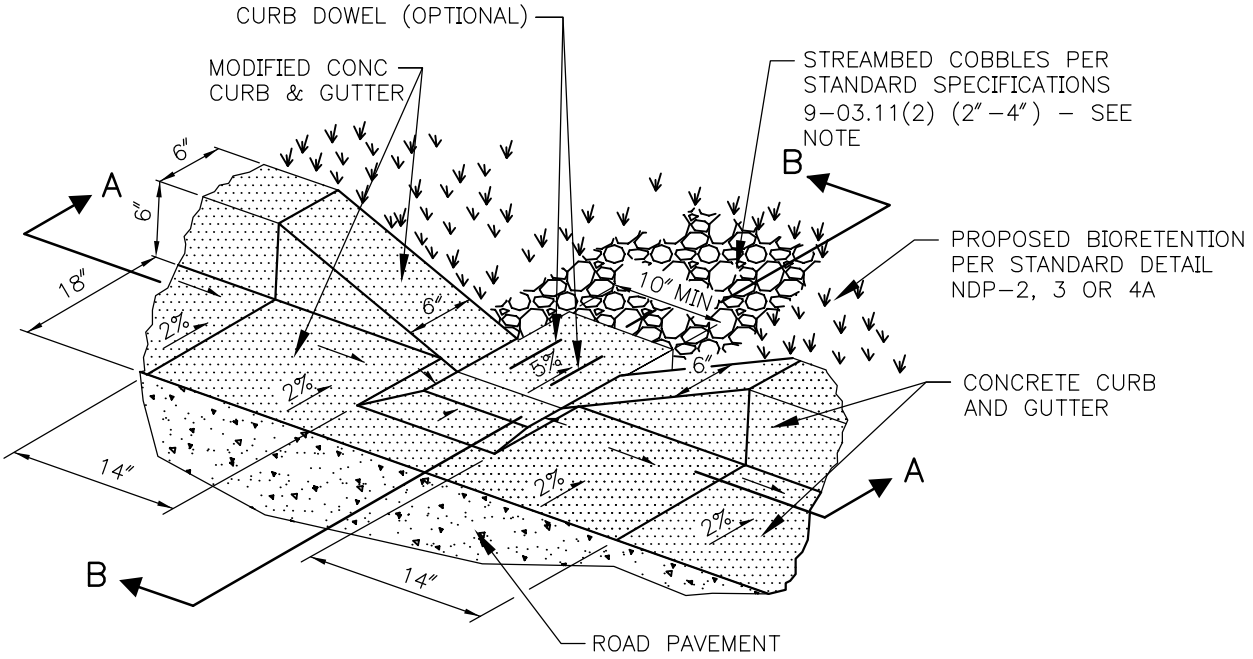

SECTION A-A

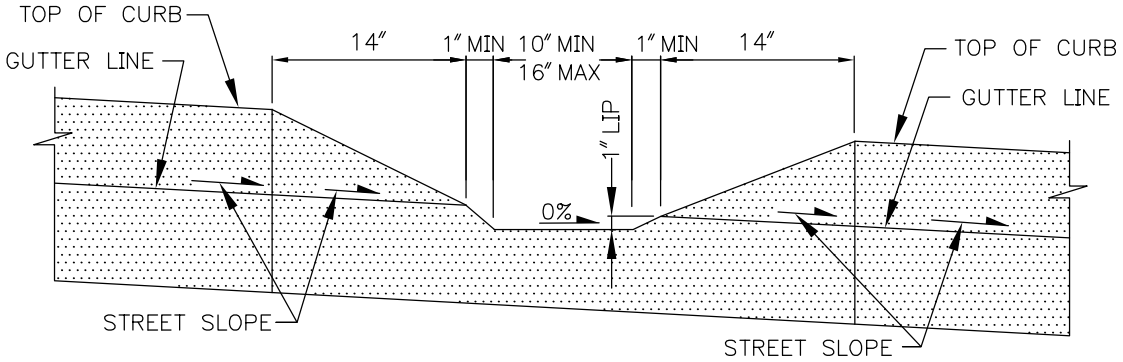

SECTION B-B

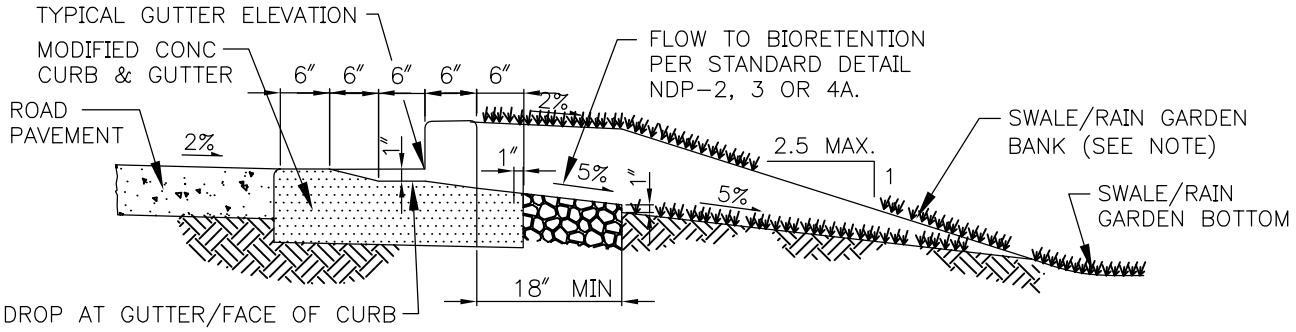

NOTE:

MODIFY INLET TO BIORETENTION PLANTER AS NEEDED TO PREVENT EROSION.

City of Bellevue

STORM AND SURFACE WATER UTILITY

TITLE

DRAIN CURB CUT OPENING FOR BIORETENTION

JANUARY 2014

NO SCALE

NO. NDP-10