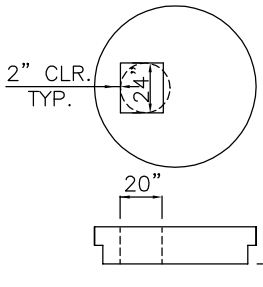

48", 54" & 60" TOP SLAB

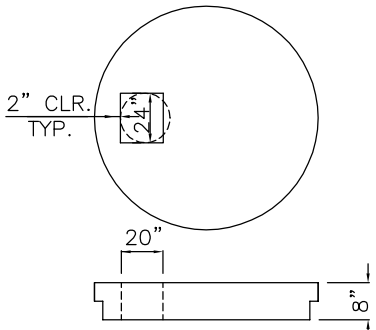

72" TOP SLAB

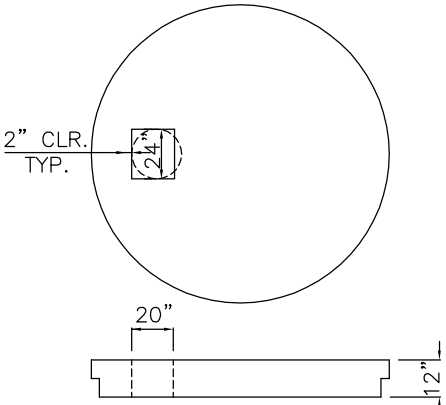

96" TOP SLAB

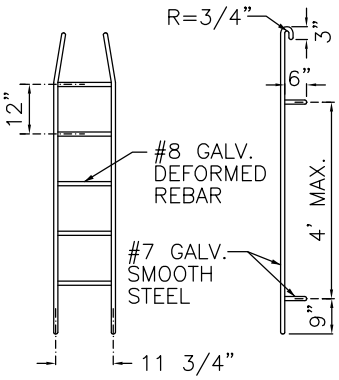

PREFABRICATED LADDER

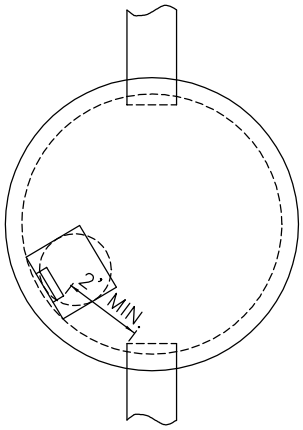

TYPICAL ORIENTATION
FOR ACCESS AND STEPS

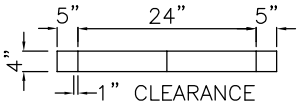

GRADE RING

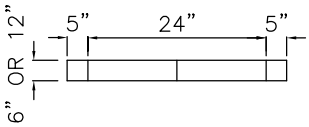

RISER

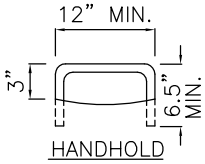

HANDHOLD

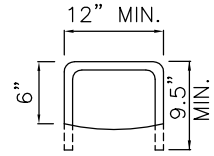

CATCH BASIN STEP

* ALL STEPS & RUNGS #8 GALV. DEFORMED REBAR OR POLYPROPYLENE.

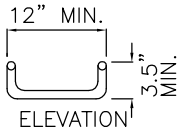

ELEVATION

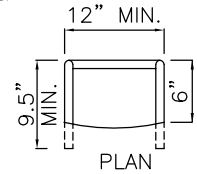

PLAN

DROP RUNG
CATCH BASIN STEP

NOTES:

1. PROPRIETARY CATCH BASIN HANDHOLDS AND STEPS ARE ACCEPTABLE, PROVIDED THAT THEY CONFORM TO SEC. R, ASTM C478, AASHTO M-199 AND MEET ALL WISHA REQUIREMENTS.
2. CATCH BASIN STEP/HANDHOLD LEGS SHALL BE PARALLEL OR APPROXIMATELY RADIAL AT THE OPTION OF THE MANUFACTURER, EXCEPT THAT ALL STEPS IN ANY CATCH BASIN SHALL BE SIMILAR. PENETRATION OF OUTER WALL BY A LEG IS PROHIBITED.
3. HANDHOLDS AND STEPS SHALL HAVE "DROP" RUNGS AS SHOWN ON DETAIL OR PROTUBERANCES TO PREVENT SIDEWAYS SLIP.
4. SLAB OPENING MAY BE 24" X 20" OR 24" DIAM.
5. PLASTIC STEPS SHALL BE POLYPROPYLENE AND CONFORM TO ASTM D-4101 WITH 1/2" ASTM-615 GRADE 60 STEEL REINFORCING BAR. LANE P-13938, M.A. PS2-PF, OR EQUAL.
6. STEPS OF LADDERS OR STEPS SHALL EXTEND TO WITHIN 16" OF BOTTOM OF CATCH BASIN.
7. HANGING LADDERS SHALL BE PERMANENTLY FASTENED AT TOP BY HANGING ON STEP OR BY BOLTING OR EMBEDDING IN CONCRETE. EACH SHALL BE EMBEDDED AT BOTTOM IN BASE.
8. ADDITIONAL SAFETY FEATURES MAY BE REQUIRED IN VERY DEEP OR UNUSUAL STRUCTURES.

City of Bellevue

STORM AND SURFACE WATER UTILITY

TITLE

LADDER, STEP, AND TOP SLAB, DETAILS

JANUARY 2014

NO SCALE

NO. D-5