SECTION VIEW

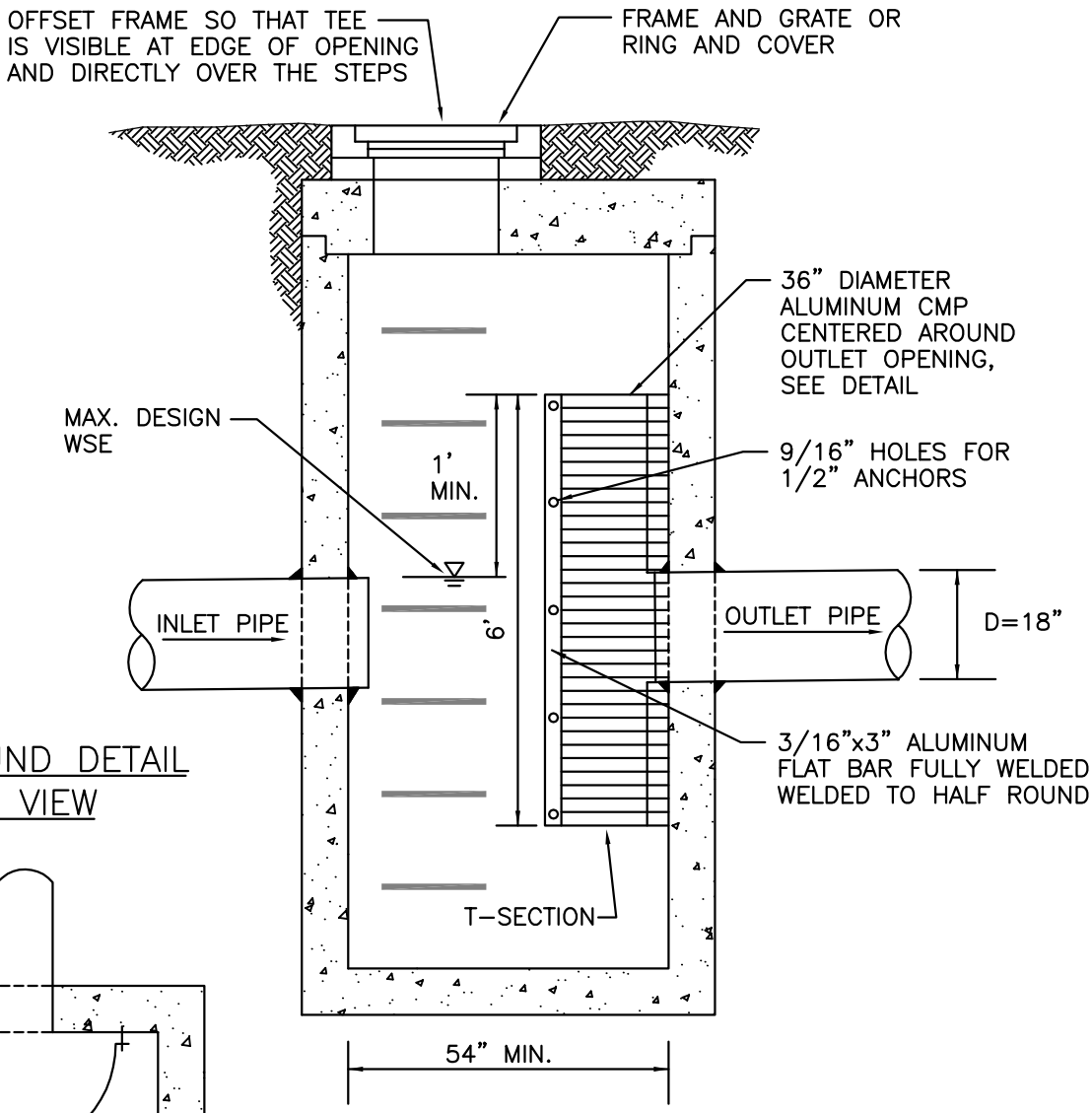

HALF ROUND DETAIL
PLAN VIEW

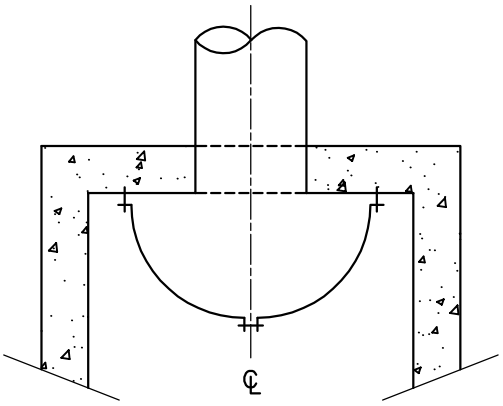

NOTES:

1. ALL METAL PARTS AND SURFACES MUST BE CORROSION RESISTANT. STEEL HARDWARE SHALL BE GALVANIZED. PIPES SHALL BE GALVANIZED, ASPHALT COATED (TREATMENT 1) OR ALUMINIZED. COMPLETE CORROSION PROTECTION MUST BE ASSURED.
2. APPLY NON-SHRINK GROUT TO INSIDE AND OUTSIDE OF JOINTS, RINGS, RISERS AND FRAMES.
3. TYPE 3 SC SEPARATOR CAN BE USED AS AN ALTERNATE TO STANDARD DETAIL D-43 SC SEPARATOR TYPE 2 WHEN A TYPE 2 WILL NOT WORK DUE TO EXISTING CONSTRAINTS.
3. FASTEN HALF ROUND TO CATCH BASIN WALL QUICK BOLTS.

City of Bellevue

STORM AND SURFACE WATER UTILITY

TITLE

SPILL CONTROL (SC) SEPARATOR TYPE 3

JANUARY 2013

NO SCALE

NO. D-43A