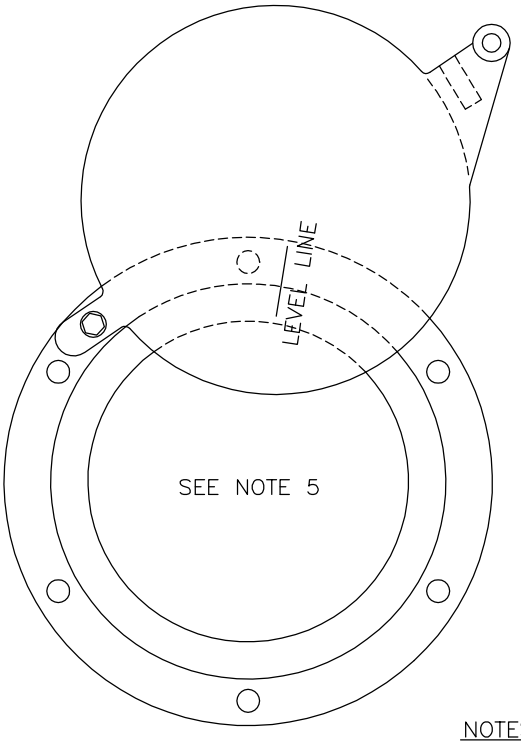

MAXIMUM OPENING OF GATE

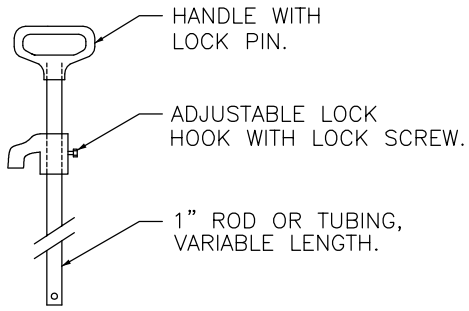

LIFT HANDLE

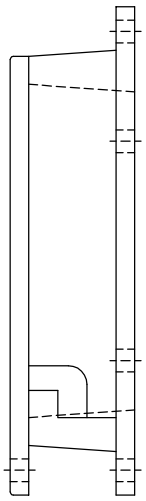

SIDE

NOTES:

1. SHEAR GATE SHALL BE ALUMINUM ALLOY PER ASTM B-26-ZG-32a OR CAST IRON ASTM A48 CLASS 30B AS REQUIRED.
2. GATE SHALL BE 8" DIAMETER FOR PIPE 12 INCHES OR LESS IN DIAMETER, 12" DIAMETER FOR PIPES GREATER THAN 12" INCHES.
3. GATE SHALL BE JOINED TO TEE SECTION BY BOLTING THROUGH FLANGE.
4. LIFT ROD: AS SPECIFIED BY MFR. WITH HANDLE EXTENDING TO WITHIN ONE FOOT OF COVER AND ADJUSTABLE HOOK LOCK FASTENED TO FRAME OR UPPER HANDHOLD.
5. GATE SHALL NOT OPEN BEYOND THE CLEAR OPENING BY LIMITED HINGE MOVEMENT, STOP TAB, OR SOME OTHER DEVICE.
6. NEOPRENE RUBBER GASKET REQUIRED BETWEEN RISER MOUNTING FLANGE AND GATE FLANGE, STOP TAB, OR SOME OTHER DEVICE.
7. MATING SURFACES OF LID AND BODY TO BE MACHINED FOR PROPER FIT.
8. FLANGE MOUNTING BOLTS SHALL BE 3/8" DIAM. STAINLESS STEEL.
9. ALTERNATE SHEAR GATES TO THE DESIGN SHOWN ARE ACCEPTABLE, PROVIDED THEY MEET THE MATERIAL SPECIFICATIONS ABOVE.
10. FOR PRIVATE USE ONLY.

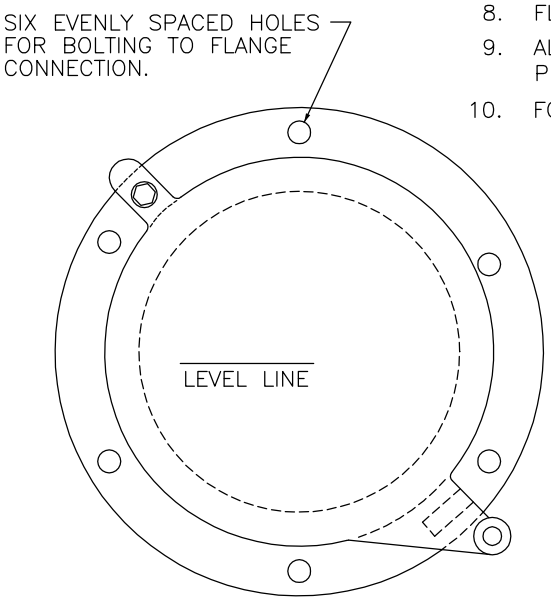

FRONT

City of Bellevue

STORM AND SURFACE WATER UTILITY

TITLE

PIVOTING SHEAR GATE DETAIL

JANUARY 2013

NO SCALE

NO. D-27