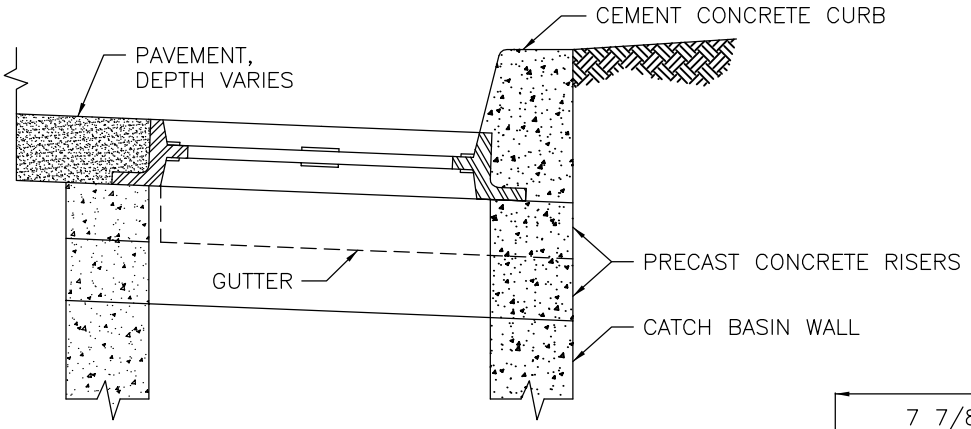

VERTICAL CURB

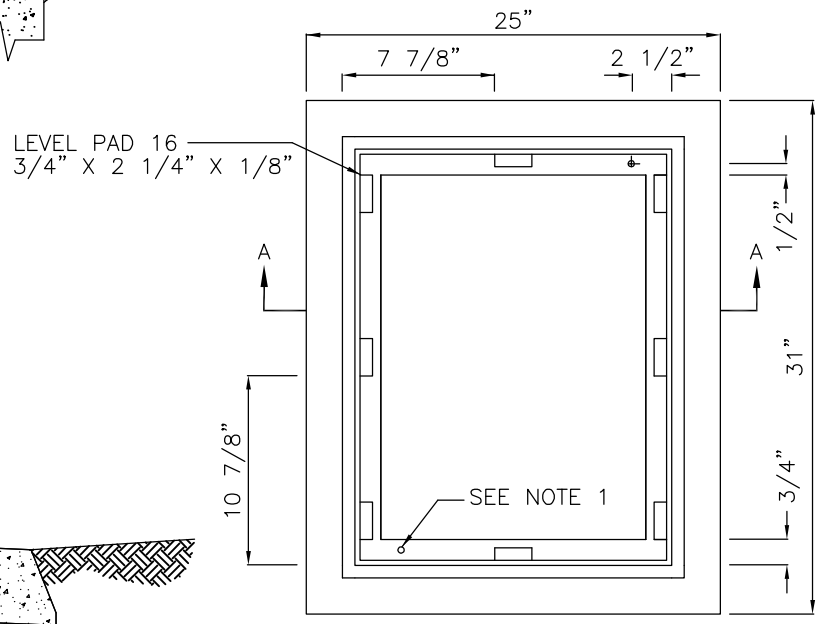

PLAN

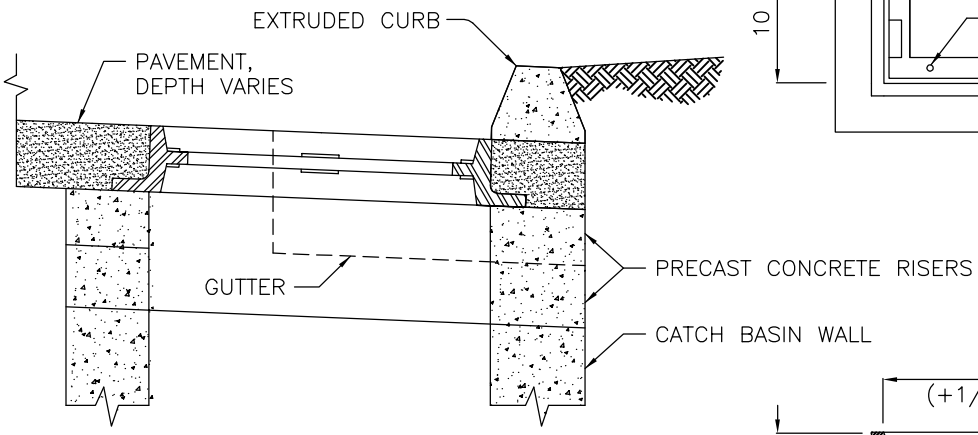

EXTRUDED CURB

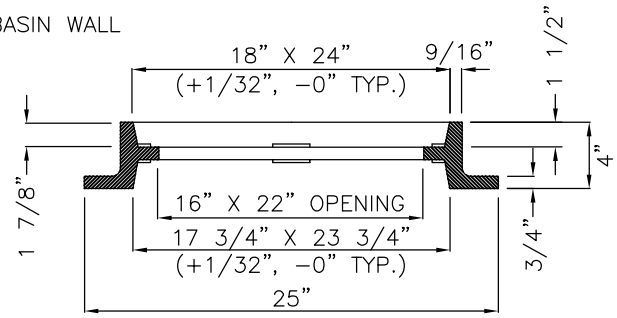

SECTION A–A

NOTES:

1. DRILL AND TAP FOR, AND PROVIDE, TWO LOCKING BOLTS 5/8"–11 NC STAINLESS TYPE 304 STEEL SOCKET HEAD (ALLEN HEAD) BOLTS, 2" LONG.
2. FRAME MATERIAL IS CAST IRON PER ASTM A48 CLASS 30 OR BETTER.
3. SET FRAME TO GRADE AND CONSTRUCT ROAD AND GUTTER TO BE FLUSH WITH FRAME.
4. MATCH CENTERLINE OF CATCH BASIN TO CURB LINE FOR TYPE 1 AND 1–L.

City of Bellevue

STORM AND SURFACE WATER UTILITY

TITLE

STANDARD FRAME INSTALLATION

JANUARY 2013

NO SCALE

NO. D–9