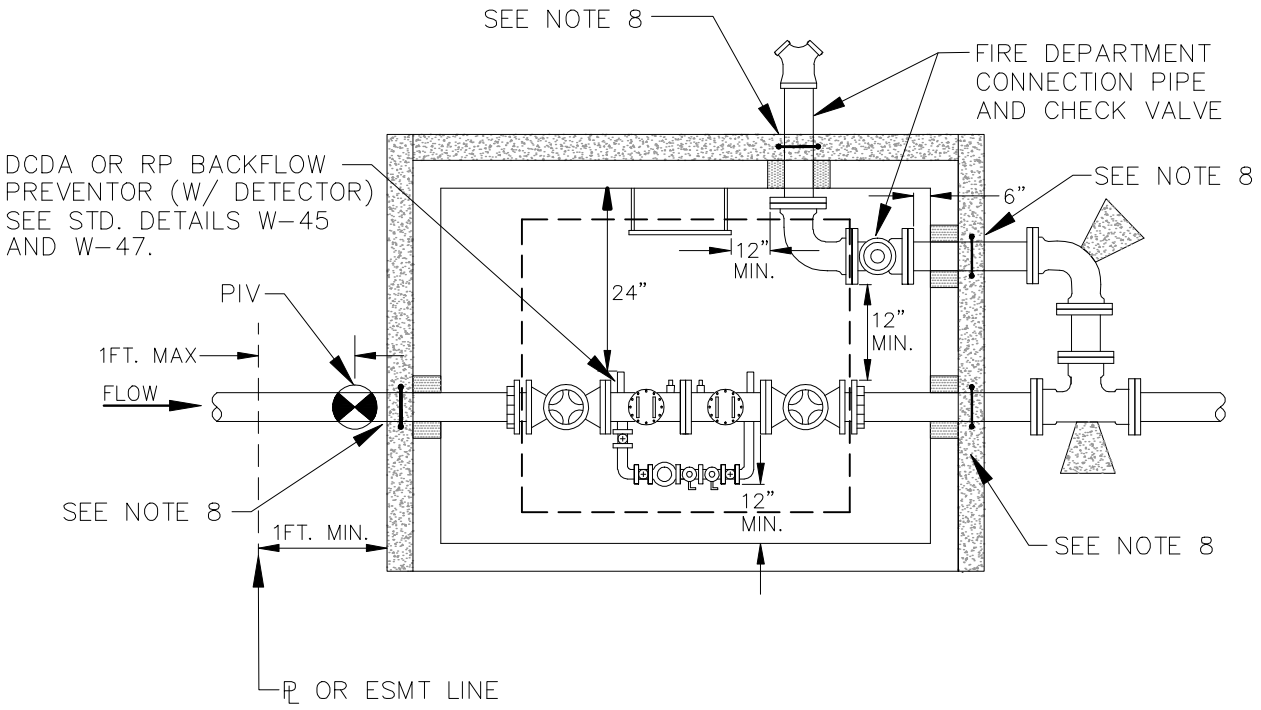

PLAN

NOTES:

1. FDC TO BE LOCATED DOWNSTREAM OF DCDA (DOUBLE CHECK DETECTOR ASSEMBLY) OR RPDA (REDUCED PRESSURE DETECTOR ASSEMBLY).
2. PROVIDE MINIMUM OF 6" CLEARANCE BETWEEN VALVES, FITTINGS AND THE VAULT WALL.
3. ALL DIMENSIONS SHOWN ARE MINIMUM ALLOWED.
4. INSTALL FDC LINE ON SIDE OF VAULT WITH GREATEST AVAILABLE SPACE, AS SHOWN.
5. WHEN FDC LINE IS ROUTED THROUGH THE VAULT, THE VAULT SIZE SHALL BE INCREASED TO MATCH THE SIZE REQUIRED FOR THE MINIMUM CLEARANCES.
6. ALL PIPE JOINTS SHALL BE RESTRAINED. CONCRETE BLOCKING IS REQUIRED AT CHANGES IN DIRECTION.
7. CORE DRILL (O.D. +2") VAULT IF KNOCK-OUTS ARE NOT PROVIDED.
8. SEAL PIPE PENETRATIONS WITH WATER-TIGHT GROUT. RESTRAIN INLET/OUTLET PIPES WITH WELDED FLANGE OR MEGALUG MID-SPAN RESTRAINT AND THRUST BLOCK ADJACENT TO VAULT DETAIL W-56.
9. WHEN PIV IS LOCATED IN VAULT, THE VAULT SIZE SHALL BE INCREASED TO MATCH THE SIZE REQUIRED TO ACCOMMODATE PIV INSTALLATION WITH 6" CLEARANCES ON VAULT INTERIOR. (LID TO BE CORE DRILLED - USE LINK SEAL/GROUT TO SEAL PENETRATION).

City of Bellevue

WATER UTILITY

TITLE

REQUIREMENTS FOR FDC AND CHECK VALVE ROUTED THROUGH BACKFLOW ASSEMBLY VAULT-2

NO. W-50

JANUARY 2010

NO SCALE