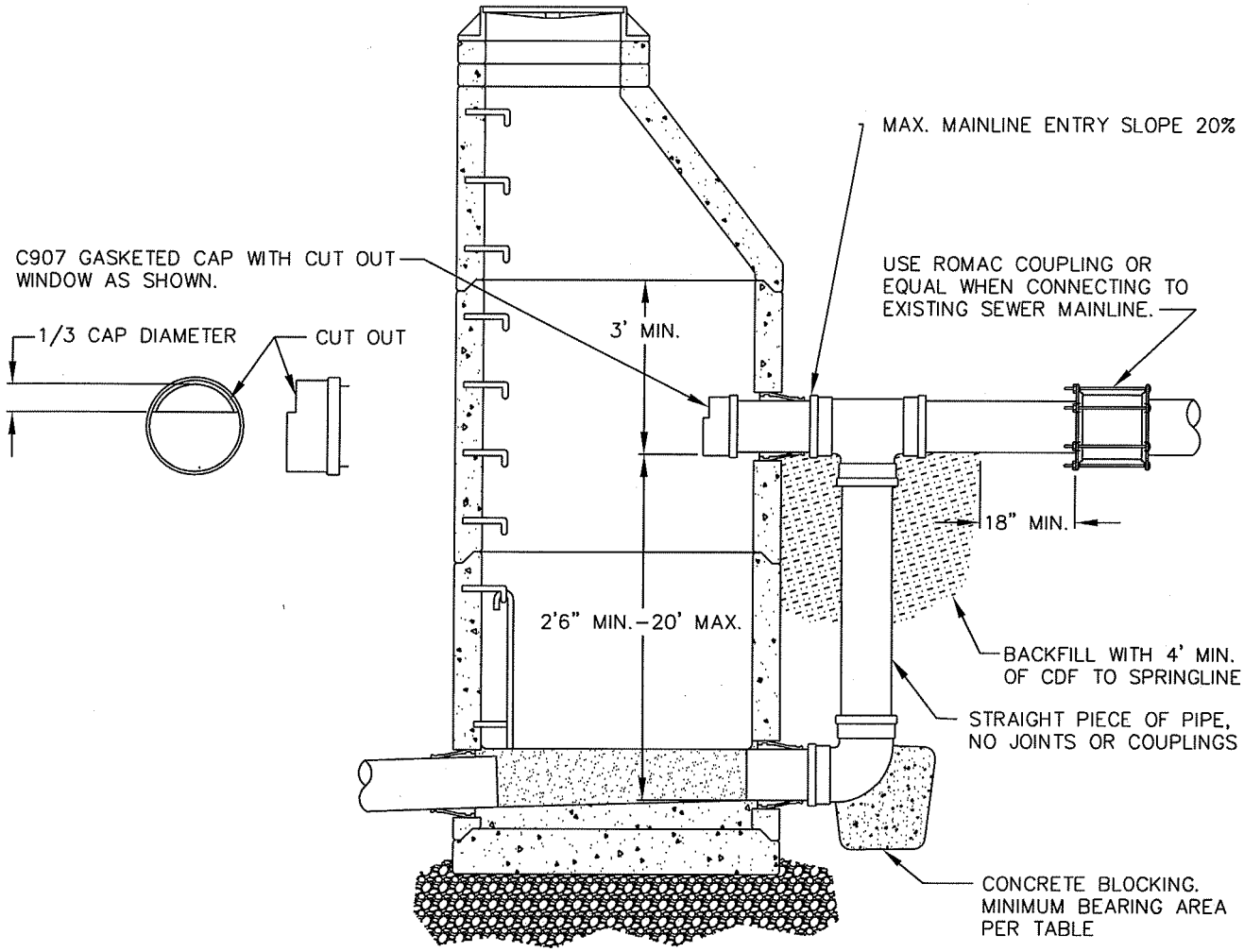


NOTES:

1. MANHOLE SHALL CONFORM TO GENERAL NOTES AND ALL APPICABLE REQUIREMENTS OF STANDARD DETAIL S–1.
2. OUTSIDE DROP SHALL BE CONSTRUCTED USING AWWA C900 PIPE AND AWWA C907 FITTINGS.
3. DROP TEE TO BE INSTALLED MINIMUM OF 3' BELOW CONE SECTION.
4. CHANNEL BASE WITH 3000 PSI CONCRETE. WIDTH AND DEPTH OF CHANNEL MUST EQUAL THE LARGEST PIPE DIAMETER WITH A SLOPE OF 2% MIN. CHANNEL WALLS MUST BE VERTICAL. SLOPE SHELF TO CHANNEL AT 1" PER FOOT MIN.
5. CORE DRILL OPENINGS FOR NEW PIPE WHEN DROP IS INSTALLED ON EXISTING MANHOLE. USE KOR–N–SEAL CONNECTORS OR EQUAL.
6. USE ROMAC COUPLING OR EQUAL WHEN CONNECTING TO EXISTING SEWER MAINLINE.
7. USE C900 X SDR 35 PVC ADAPTER WHEN CONNECTING TO SDR 35 PVC MAINLINE.

BEARING AREA BASED ON 2000 POUNDS PER SQUARE FOOT SAFE BEARING LOAD. (FOR PIPE UP TO 18 INCH DIAMETER)

| HEIGHT OF DROP IN FEET | MINIMUM BEARING AREA IN SQUARE FEET |
|---|---|
| 2 1/2 – 5 | 1.0 |
| 6 – 10 | 2.0 |
| 11 – 15 | 2.5 |
| 16 – 20 | 3.0 |

City of Bellevue

SEWER UTILITIES

TITLE

OUTSIDE DROP STRUCTURE

JANUARY 2009

NO SCALE

NO. S–4