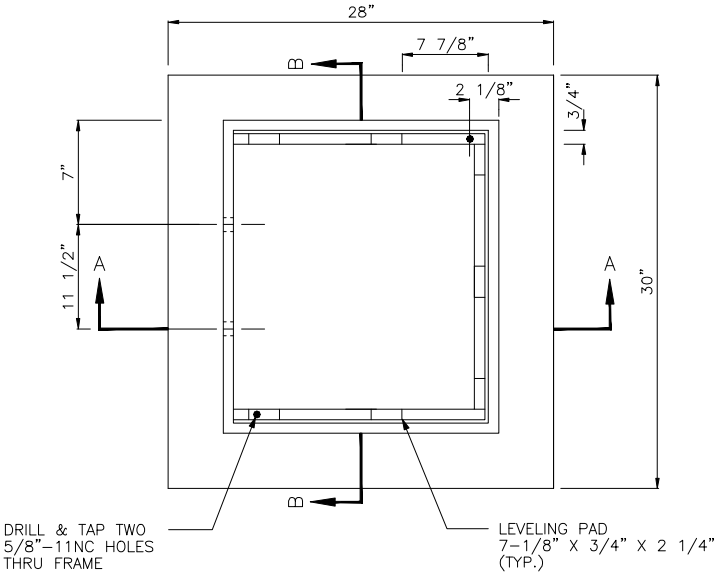

PLAN

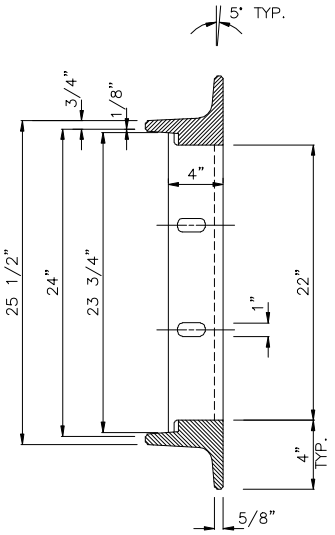

SECTION B-B

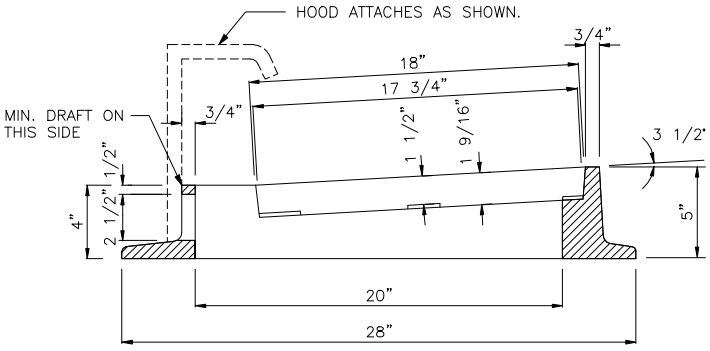

SECTION A-A

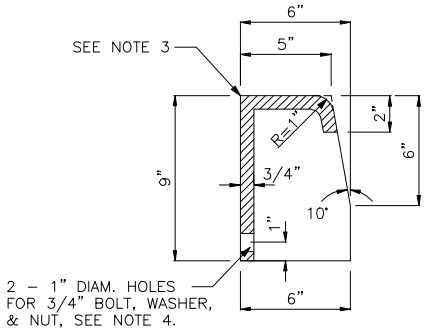

SECTION C-C

NOTES:

1. MATERIAL SHALL CONFORM TO SECTION 9-05.15(2) OF THE STANDARD SPECIFICATIONS.
2. PATTERN ON TOP SURFACE OF HOOD SHALL BE 3/16" NON-SKID DIAMOND.
3. BOLT, WASHER, AND NUT SHALL BE GALVANIZED OR CORROSION RESISTANT.
4. SEE DETAIL D-11 FOR INSTALLATION.

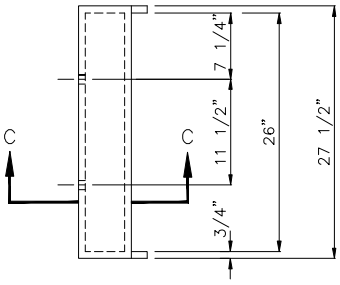

HOOD DETAIL

City of Bellevue

STORM AND SURFACE WATER UTILITY

TITLE

THROUGH-CURB INLET FRAME

JANUARY 2011

NO SCALE

NO. D-10