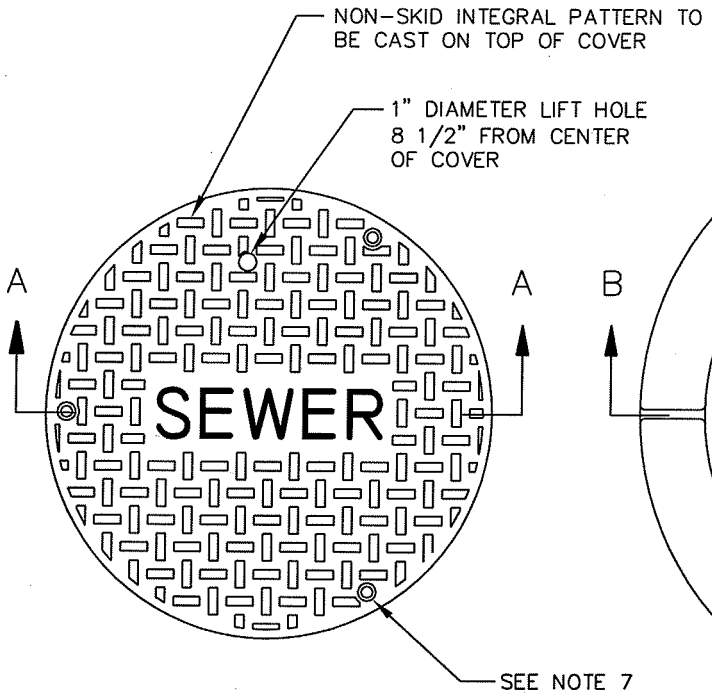

COVER PLAN

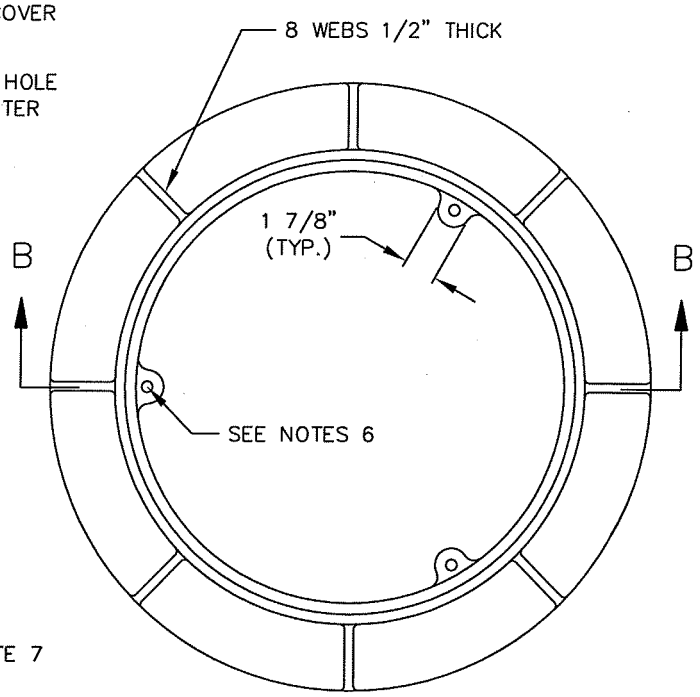

RING PLAN

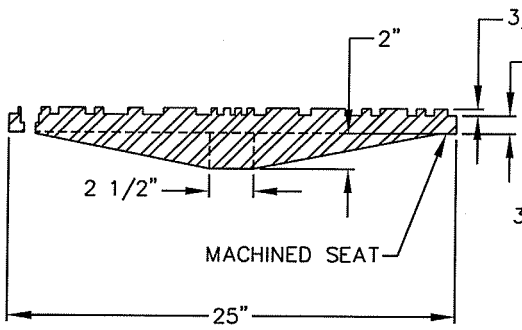

SECTION A-A

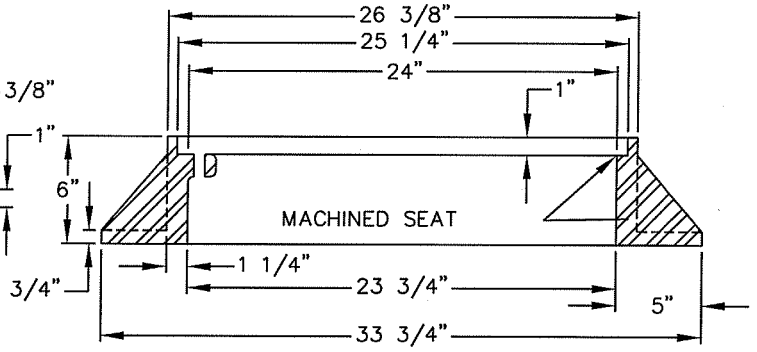

SECTION B-B

NOTES:

1. COVER SHALL HAVE THE WORD "SEWER" CAST IN 3" RAISED LETTERS.
2. ONLY FOR USE IN EASEMENTS AND UNPAVED AREAS. DO NOT USE IN PAVED AREAS.
3. RING AND COVER MATERIAL: DUCTILE IRON ASTM A536-GRADE 80-55-06 OR CAST IRON ASTM A48-CLASS 30.
4. DUCTILE OR CAST COVER SHALL HAVE MINIMUM WEIGHT OF 150 LBS.
5. DUCTILE OR CAST RING SHALL HAVE MINIMUM WEIGHT OF 210 LBS.
6. RING SHALL HAVE THREE 5/8"-11 N.C. TAPPED HOLES AT 120 DEGREES.
7. COVER SHALL HAVE THREE COUNTERSUNK 5/8"-11 N.C THROUGH HOLES AT 120 DEGREES TO MATCH RING.
8. LOCKING BOLTS SHALL BE 5/8"-11 N.C. X 2" 304 STAINLESS STEEL SOCKET (ALLEN) HEAD.
9. OLYMPIC FOUNDRY MH30AD/T, OR EQUAL.
10. RING AND COVER SHALL BE RATED HS-20.

City of Bellevue

SEWER UTILITIES

TITLE

24" BOLT-LOCKING MANHOLE RING AND COVER

JANUARY 2009

NO SCALE

NO. S-12