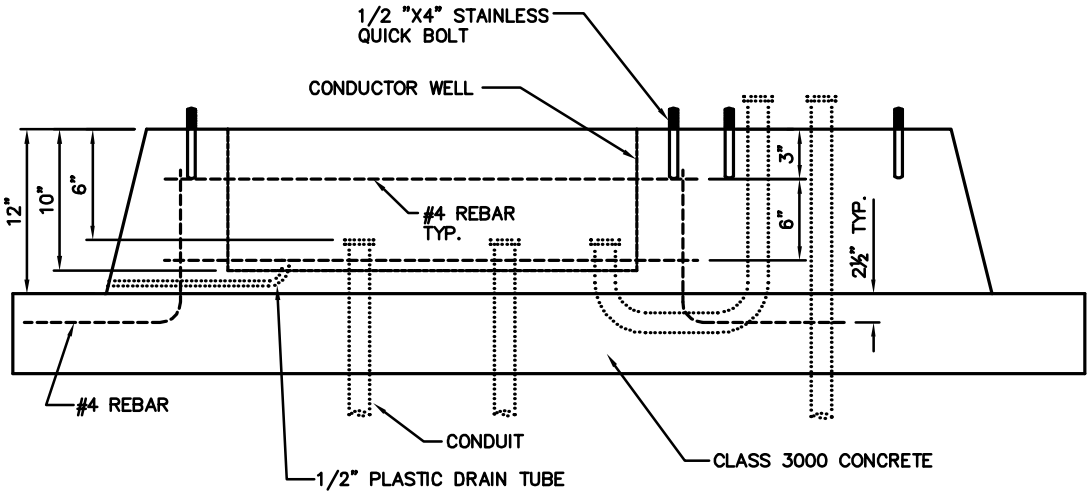

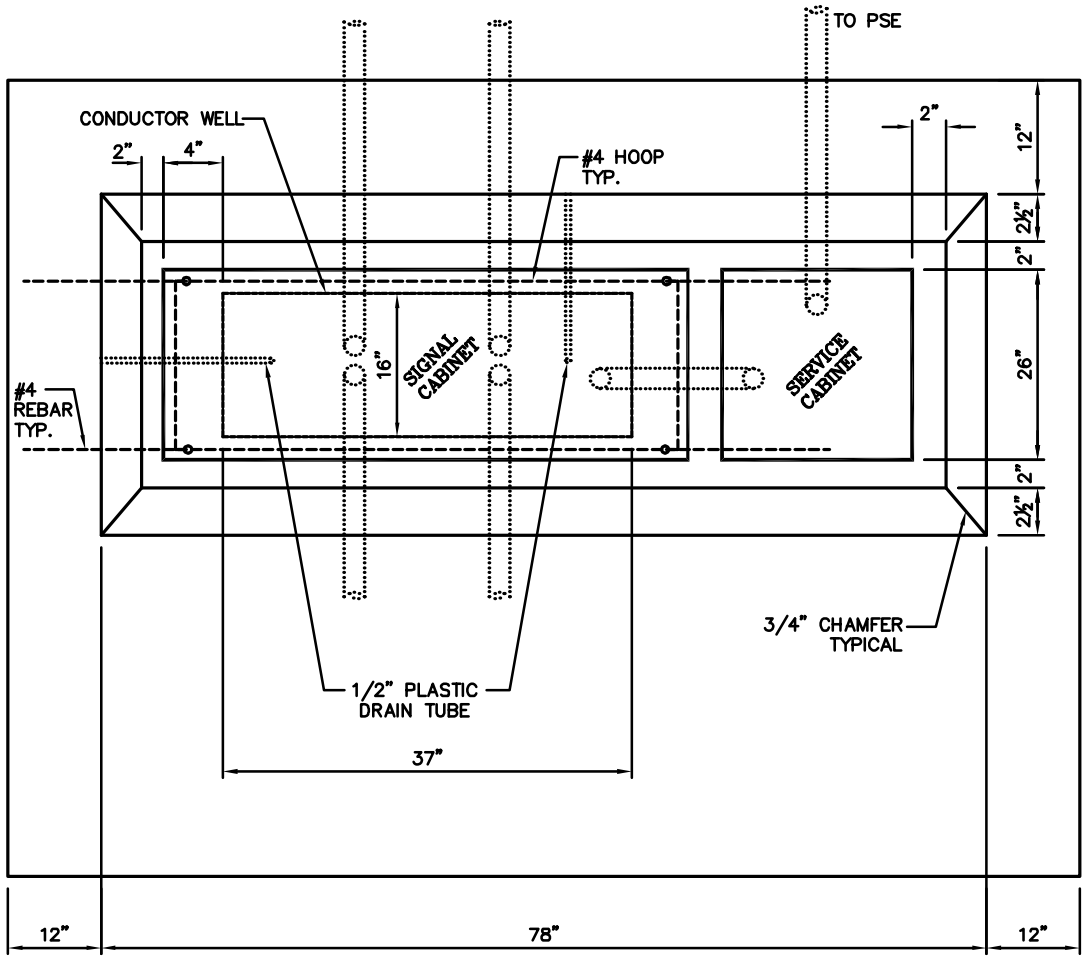

*NOTE: CONTRACTOR TO VERIFY BOLT PATTERN WITH CABINETS

NEMA CONTROLLER CABINET AND SERVICE CABINET FOUNDATION DETAIL

DRAWING NUMBER	TSSL-20
SCALE	NONE
REVISION DATE	10/08
DEPARTMENT	TRANS

SIGNAL AND SERVICE CABINET FOUNDATION DETAIL

City of Bellevue