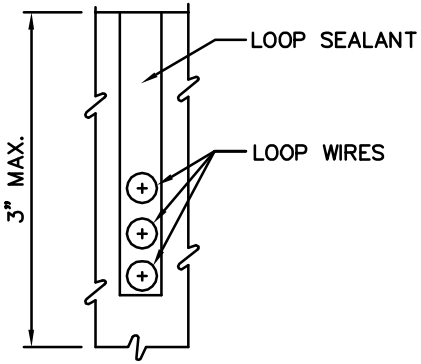

1/4" LOOP SAWCUT CROSS-SECTION

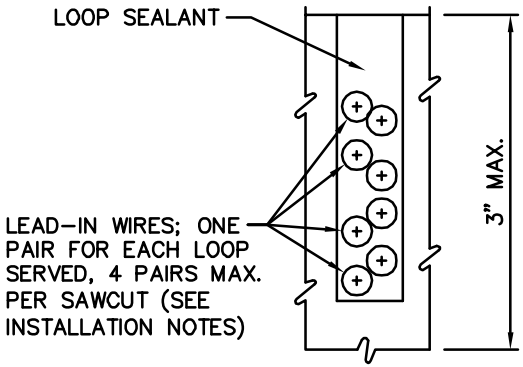

1/2" LEAD-IN SAWCUT CROSS-SECTION

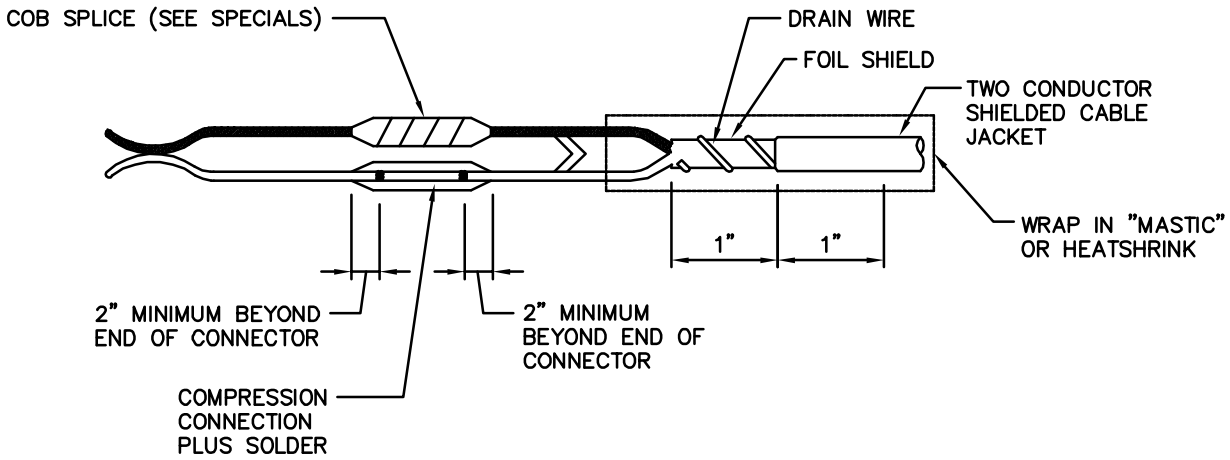

LOOP SPLICE

City of Bellevue

LOOP DETECTOR DETAIL

DRAWING NUMBER	TSSL-13
SCALE	NONE
REVISION DATE	11/12
DEPARTMENT	TRANS