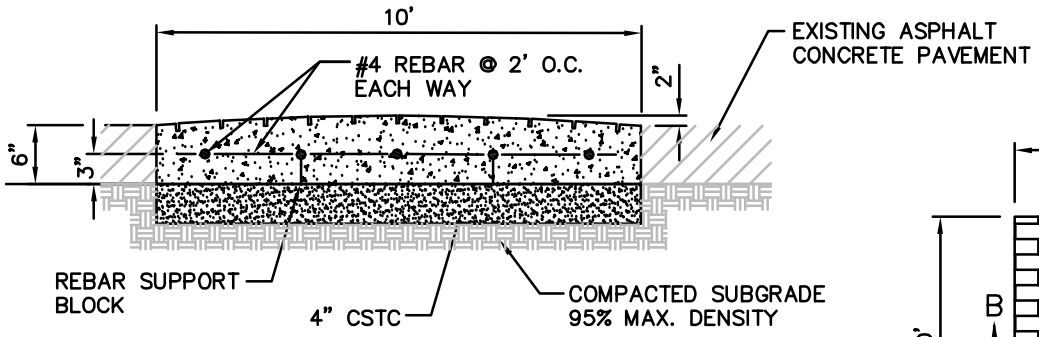

SECTION A–A

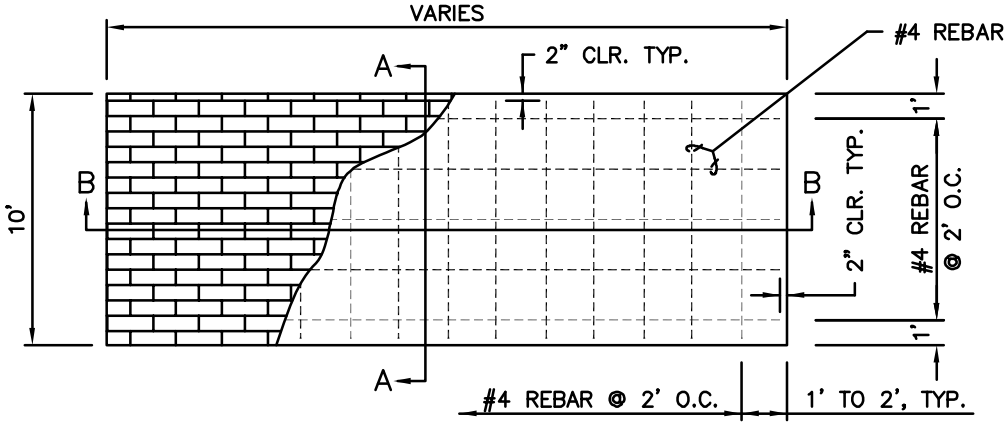

PLAN

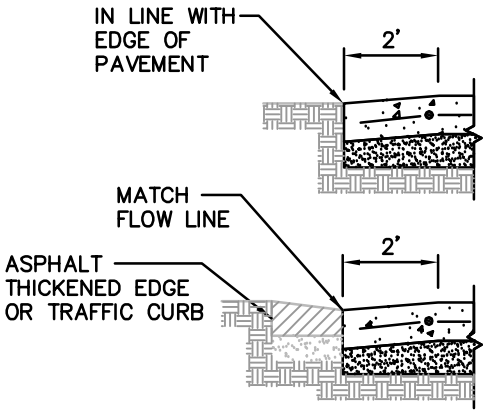

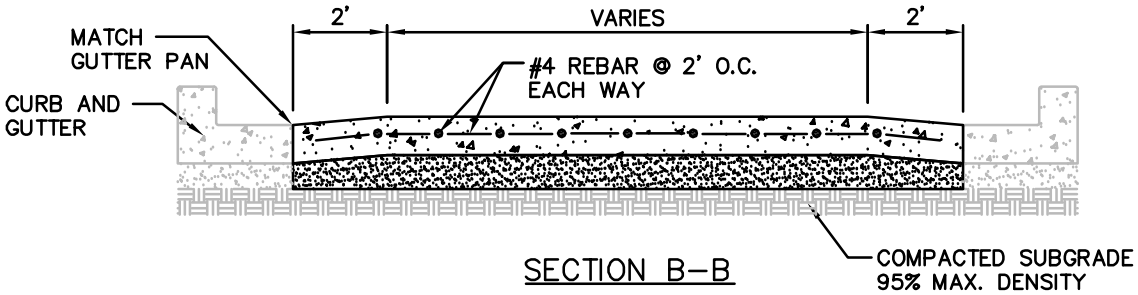

SECTION B–B

NOTES:

1. MATERIAL SHALL BE PATTERNED, COLORED CONCRETE WITH COLOR INTEGRAL TO THE CONCRETE.
2. COLOR AND PATTERN TO BE AS SPECIFIED ON THE PLANS.

City of Bellevue

PATTERNED CONCRETE ENTRY TREATMENT

DRAWING NUMBER	TE–32
SCALE	NONE
REVISION DATE	01/14
DEPARTMENT	TRANS